SPECIAL PACKAGING INSTRUCTION

CODE ID	SPI NO. (TPO)
98747	F01-208-0169
	SHEET 1 OF 8

PART OR DRAWING NO.	NATIONAL STOCK NO.	CURRENT REV
5007076B	2835-01-208-0169 RP	H

ITEM NOMENCLATURE: GEARBOX, ACCESSORY DRIVE, TURBINE ENGINE

ORIGINAL DATE: 86218

ILL. K. KNIGHTON
P.S. D. GIBSON
CHK. B. TALBOT
AUTH. J. BURLEIGH

MILITARY PRESERVATION IAW MIL-STD-2073-1

SERVICEABLE METHOD: 20
UNSERVICEABLE METHOD: 20
QUP 001
ICQ 000
CLEANING & DRYING: IAW MIL-STD-2073-1
PRESERVATIVE: MIL-PRF-7808 / MIL-PRF-23699

PACKING AS SPECIFIED BELOW AND BILL OF MATERIALS

LEVEL	SPEC	STYLE	TYPE	CL	VRTY	GR	TR
A	ASTM D6256 (MOD)	A	I	2			B
B	ASTM D6256 (MOD)	A	I	2			A

	LEVEL A	LEVEL B
GROSS CU FT	22.028	22.028
GROSS WT LBS	230	230
DESIGN FRAGILITY G	100	100

	LENGTH	WIDTH	DEPTH
CNTR I.D.			
LEVEL A:	50 1/2	30	17
LEVEL B:	50 1/2	30	17
CNTR O.D.			
LEVEL A:	52 3/4	32 1/4	22 3/8
LEVEL B:	52 3/4	32 1/4	22 3/8
ITEM DIM	43 1/2	20 1/2	14 1/2
ITEM WT.	150 LBS		

MARKING IAW MIL-STD-129

SPECIAL MARKINGS:

A) SPI NO. F01-208-0169
MARK THE SPI NUMBER ON THE IDENTIFICATION SIDE OF CONTAINER.

B) REUSABLE CONTAINER & DUNNAGE DO NOT DESTROY.

C) TO OPEN REMOVE BOTTOM LAG BOLTS. LIFT OFF STRUCTURE AS ONE PIECE.

D) LIFT BY BASE ONLY.

REVISIONS		
LTR	DESCRIPTION	DATE
H	REVISED BASE AND BLOCKING	23082

CLOSURE

LEVEL A: IAW: ASTM D6256
LEVEL B: IAW: ASTM D6256

DISTRIBUTION STATEMENT D: DISTRIBUTION AUTHORIZED TO DOD AND U.S. DOD CONTRACTORS ONLY, ADMINISTRATIVE OR OPERATIONAL USE, 15 APRIL 2018. OTHER REQUESTS FOR THIS DOCUMENT SHALL BE REFERRED TO 406 SCMS/GULAA, (PACKAGING DIVISION), HILL AFB, UTAH 84056.

DESTRUCTION NOTICE: IAW DoDI 5200.48 4.5.a; MUST DO SO IN A MANNER MAKING IT UNREADABLE, INDECIPHERABLE, AND IRRECOVERABLE.

SPI NO. F01-208-0169

SPECIAL PACKAGING INSTRUCTION
(PRIMARY PACK)

CODE ID	SPI NO. (TPO)
98747	F01-073-4195
	SHEET 1 OF 10

PART OR DRAWING NO.	NATIONAL STOCK NO.	CURRENT REV
160001-1100A	2835-01-308-3769 RP	G

ITEM NOMENCLATURE	ORIGINAL DATE
ENGINE, GAS TURBINE, NONAIRCRAFT	82265

ILL. K. KNIGHTON
P.S. W. MONSON
CHK. K. RESTORFF
AUTH. J. BURLEIGH

MILITARY PRESERVATION IAW MIL-STD-2073-1

SERVICEABLE METHOD: 42 [2]
UNSERVICEABLE METHOD: 42 [2]
QUP 001
ICQ 000
CLEANING & DRYING: IAW MIL-STD-2073-1
PRESERVATIVE: N/A

MARKING IAW MIL-STD-129 [1]

SPECIAL MARKINGS:
A) SPI NO. F01-073-4195
MARK THE SPI NUMBER ON THE IDENTIFICATION SIDE OF CONTAINER.
B) REUSABLE CONTAINER & DUNNAGE DO NOT DESTROY.
C) NOT FOR OUTSIDE STORAGE

ADDITIONAL SPECIAL MARKINGS:
A) DANGEROUS GOODS IN APPARATUS UN3363
B) TYPE AND FLASH POINT OF FUEL [3]
C) CLASS 9 LABEL

CLOSURE

LEVEL A: IAW: ASTM D6251 (UNNAILED CLOSURE)
LEVEL B: IAW: ASTM D6251 (UNNAILED CLOSURE)

PACKING AS SPECIFIED BELOW AND BILL OF MATERIALS

LEVEL	SPEC	STYLE	TYPE	CL	VRTY	GR	TR
A	ASTM D6251	A	III	2			B
B	ASTM D6251	A	III	2			A

	LEVEL A	LEVEL B
GROSS CU FT	10.557	10.557
GROSS WT LBS	109	109
DESIGN FRAGILITY G	50	50

	LENGTH	WIDTH	DEPTH
CNTR I.D.			
LEVEL A:	21	21	27
LEVEL B:	21	21	27
CNTR O.D.			
LEVEL A:	23 1/4	23 1/4	33 3/4
LEVEL B:	23 1/4	23 1/4	33 3/4
ITEM DIM	18 1/2	12	12
ITEM WT.	44 LBS		

REVISIONS		
LTR	DESCRIPTION	DATE
G	CHANGED METHOD OF PRESERVATION, UPDATED OD, UPDATED FORM	25034

CAUTION:
ITEMS CONTAINING RESIDUAL FUEL ARE CONSIDERED HAZARDOUS MATERIALS AND MUST BE PACKED IAW THE APPROPRIATE HAZARDOUS MATERIAL REGULATION AND CERTIFIED BY AUTHORIZED HAZARDOUS MATERIAL PERSONNEL

CONTROLLED BY: 406 SCMS
CONTROLLED BY: GULAA-HILL AFB
CONTROLLED BY: CUI/SP-CTI
DISTRIBUTION/DISSEMINATION CONTROL: FEDCON
POC: 406SCMS.GULAA.CONTRACTSHILL@US.AF.MIL

SPI NO. F01-073-4195

SPECIAL PACKAGING INSTRUCTION	CODE ID 98747	SPI NO. (TPO) F01-073-4195
ITEM NOMENCLATURE ENGINE, GAS TURBINE, NONAIRCRAFT		SHEET 2 OF 10

P/N	QTY REQD	NOMENCLATURE OR DESCRIPTION	SIZE: (INCHES UNLESS SPECIFIED) TOLERANCES ON FRAC. ± 1/8, DECIMAL ± .10, ANGLES ± 1°	MATERIAL SPECIFICATION
-13	2	STRAP, STEEL	3/4 X 0.015 X AS REQUIRED	ASTM D3953 TYPE 1, RD, FINISH A
-12	A/R	TAPE, PACKAGING	3 X AS REQUIRED	ASTM D5486 TYPE I OR V
-11	1	PAD, TOP	15 7/8 X 15 7/8 X 1 11/16	ASRM D4727 CF, DOM, SW, GRADE 200 B 5
-10	A/R	TAPE, FILAMENT	1 X AS REQUIRED	ASTM D5330 TYPE I OR II
-9	1	WRAP	50 X 32	MIL-PRF-121 TYPE I A 5
-8	1	PAD, BOTTOM	15 7/8 X 15 7/8 X 3 15/16	ASTM D4727 CF, DOM, SW, GRADE 200 4
-7	A/R	MATERIAL, SORBENT	AS REQUIRED	A-A-59759 TYPE II
-6	1	CONTAINER, INTERIOR	16 X 16 X 21 (ID)	ASTM D5118 RSC, CF, DOM, SW, GRADE 200
-5	1	BAG, BARRIER	41 x 41 (ID)	MIL-DTL-117 TYPE II, CLASS C, STYLE 1
-4	2	CUSHION, END	26 1/8 X 20 3/4 X 2	MIL-PRF-26514 TYPE I, CLASS 2
-3	2	CUSHION, SIDE	22 1/8 X 16 3/4 X 2	MIL-PRF-26514 TYPE I, CLASS 2
-2	2	CUSHION, TOP & BOTTOM	20 7/8 X 16 3/4 X 2	MIL-PRF-26514 TYPE I, CLASS 2
-1	2	SKID	4 X 4 (NOM) X 23 1/4	ASTM D6199 CLASS 2

SPECIAL PACKAGING INSTRUCTION	CODE ID 98747	SPI NO. (TPO) F01-073-4195
ITEM NOMENCLATURE ENGINE, GAS TURBINE, NONAIRCRAFT		SHEET 3 OF 10

CAUTION NOTICES

NOTICE 1: ASSETS PACKAGED IN ACCORDANCE WITH THE PREVIOUS EDITION OF THIS SPI DO NOT REQUIRE REPACKAGING IF THE INTEGRITY OF THE SPI IS MAINTAINED.

NOTICE 2: SEE SPIRES FOR A COMPLETE LISTING OF NSN's ASSIGNED TO THIS SPI.

NOTICE 3: PACKAGING MATERIAL MAY BE SUBSTITUTED IF IT MEETS THE REQUIREMENTS OF MIL-STD-2073-1, PROVIDES EQUAL OR BETTER PROTECTION AND THERE IS NO INCREASED COST TO THE GOVERNMENT.

NOTICE 4: FOR LEVEL A PACKAGING REQUIREMENTS, LEVEL B PACKS SHALL BE OVERBOXED IN A LEVEL A SPECIFIED CONTAINER SHOWN ON PAGE 1 UNDER PACKAGING LEVEL A.

NOTICE 5: LEVEL A PROTECTION REQUIRED TO MEET THE MOST SEVERE WORLDWIDE SHIPMENT, HANDLING, AND STORAGE CONDITIONS. EXAMPLES OF SITUATIONS ARE: WAR RESERVE MATERIAL, MOBILIZATION, STRATEGIC AND THEATER DEPLOYMENT, OPEN STORAGE AND DECK LOADING. SECURITY ASSISTANCE ITEMS, INCLUDING FMS, ARE ESPECIALLY SUSCEPTIBLE TO DAMAGE DUE TO UNKNOWN AND UNFAVORABLE TRANSPORTATION, CLIMATIC, AND STORAGE CONDITIONS. PROVIDE LEVEL B PACKING UNLESS OTHERWISE DIRECTED BY THE PROCURING COUNTRY.

INTERNATIONAL STANDARDS FOR PHYTOSANITARY MEASURES
REVISION OF ISPM NO. 15
REVISION OF WOOD PACKAGING MATERIAL FOR INTERNATIONAL TRADE

THE FOLLOWING STATEMENT IS IN COMPLIANCE WITH THE UNITED NATIONS-IMPLEMENTED RESTRICTIONS ON WOOD PACKAGING MATERIAL (WPM). THIS REQUIREMENT IS SPECIFICALLY CONCERNED WITH INVASIVE SPECIES SUCH AS THE PINEWOOD NEMATODE. WPM IS DEFINED AS WOOD PALLETS, SKIDS, LOAD BOARDS, PALLET COLLARS, WOODEN BOXES, REELS, DUNNAGE, CRATES, FRAMES, AND CLEATS. THE STATEMENT BELOW CITES THE REQUIREMENTS IN DETAIL AND COVERS LUMBER FOR BUILDING CONTAINERS AND PALLETS USED FOR DELIVERIES, RESULTING IN SHIPMENTS WORLDWIDE (DIRECT, OR THROUGH AIR LOGISTICS CENTERS (ALC), CONTAINER CONSOLIDATION POINTS (CCP), OR OTHER BASES).

WOODEN LUMBER, WOODEN PALLET AND PACKAGING/CONTAINER STATEMENT:

ALL WOODEN LUMBER, WOODEN PALLETS, AND WOODEN CONTAINERS PRODUCED ENTIRELY OR IN PART OF WOOD PACKAGING MATERIAL (WPM) SHALL BE CONSTRUCTED FROM DEBARKED WOOD IN ADDITION TO THE APPLICATION OF HEAT-TREATED (HT) MATERIAL (HT TO 56 DEGREES CENTIGRADE OR 133 DEGREES FAHRENHEIT FOR 30 MINUTES). CERTIFICATION/MARKING IS REQUIRED BY AN ACCREDITED AGENCY RECOGNIZED BY THE AMERICAN LUMBER STANDARDS COMMITTEE (ALSC). FOR REFERENCE DOCUMENTATION, SEE LATEST REVISION OF "INTERNATIONAL STANDARDS FOR PHYTOSANITARY MEASURES (ISPM NO. 15), "REGULATION OF WOOD PACKAGING MATERIAL IN INTERNATIONAL TRADE."

NOTES

1. I.D. TAGS MUST BE STAMPED BY RESPONSIBLE PARTY SIGNIFYING ITEM HAS BEEN PREPARED FOR SHIPMENT/STORAGE IAW APPLICABLE T.O.

2. ITEMS WHICH HAVE BEEN DRAINED AND PURGED MUST BE ACCOMPANIED WITH A COMPLETED AFTO FORM 20 OR LOCALLY PRODUCED DOCUMENTATION CERTIFYING THE ITEM HAS BEEN PROPERLY DRAINED AND PURGED. ITEMS CONTAINING RESIDUAL FUEL MUST BE PACKED IN A LEAK-PROOF LINER, WITH SORBENT MATERIAL IN A STRONG OUTER CONTAINER. MARK, LABEL, AND DOCUMENT THE PACKAGE AS DANGEROUS GOODS IN APPARATUS, UN3363, CLASS 9.

3. **IF APPLICABLE:** MARK TYPE AND FLASH POINT OF PURGING FLUID IAW AFI 24-602v2, PARA 2.16.6.3.7 AND AFMAN 24-604, A.3.3.9.5.4

4. WRAP FUEL PUMP ENTIRELY WITH SORBENT MATERIAL, REF.-7. THIS IS **NOT** A REQUIREMENT FOR NEW ITEMS. SORBENT MATERIAL MUST BE INSPECTED PRIOR TO REUSE.

5. PADS, REF.-8 AND -11, SHALL BE LAMINATED USING A-A-59692 TYPE II ADHESIVE OR EQUAL.

SPECIAL PACKAGING INSTRUCTION	CODE ID 98747	SPI NO. (TPO) F01-073-4195
ITEM NOMENCLATURE ENGINE, GAS TURBINE, NONAIRCRAFT		SHEET 4 OF 10

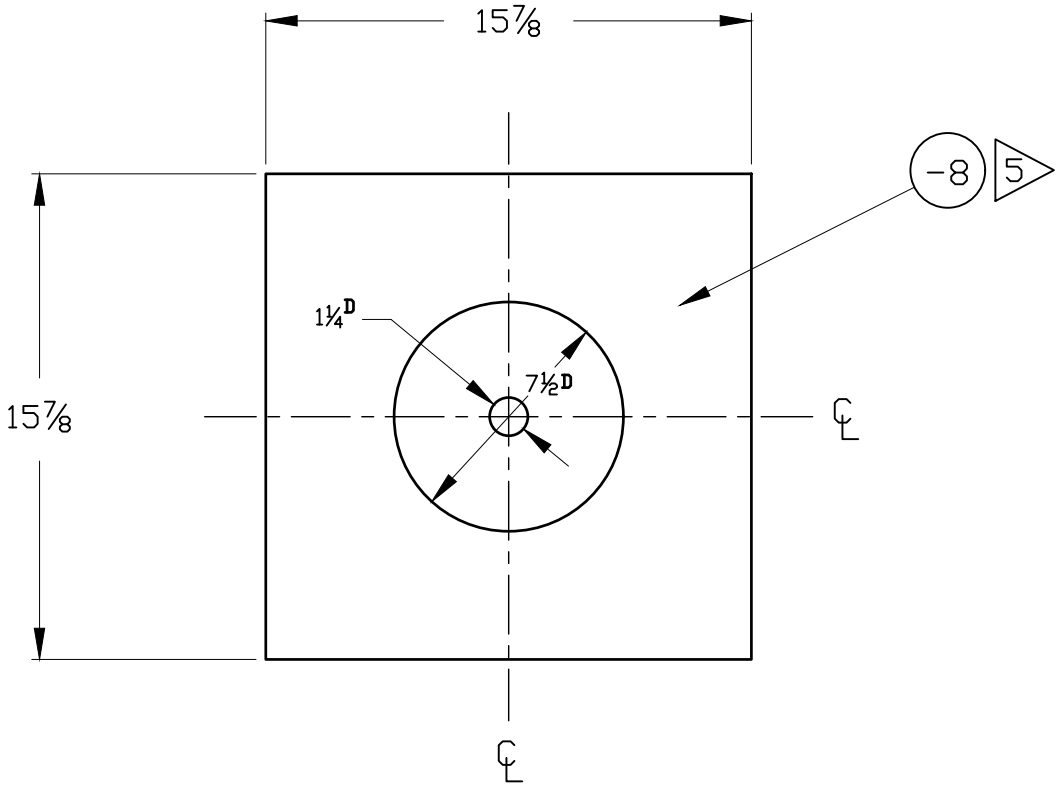

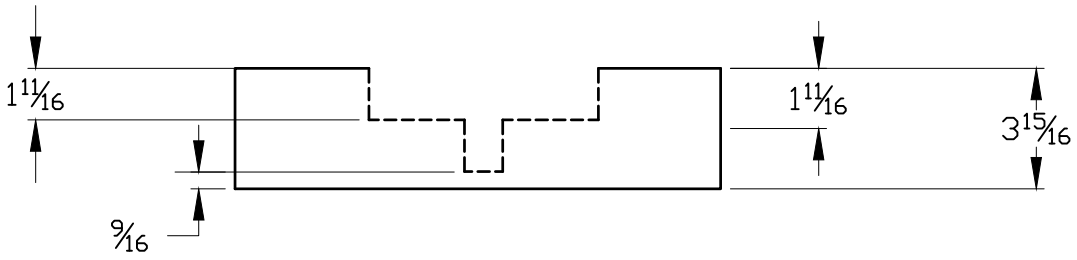

DETAIL A

SPECIAL PACKAGING INSTRUCTION	CODE ID 98747	SPI NO. (TPO) F01-073-4195
ITEM NOMENCLATURE ENGINE, GAS TURBINE, NONAIRCRAFT		SHEET 5 OF 10

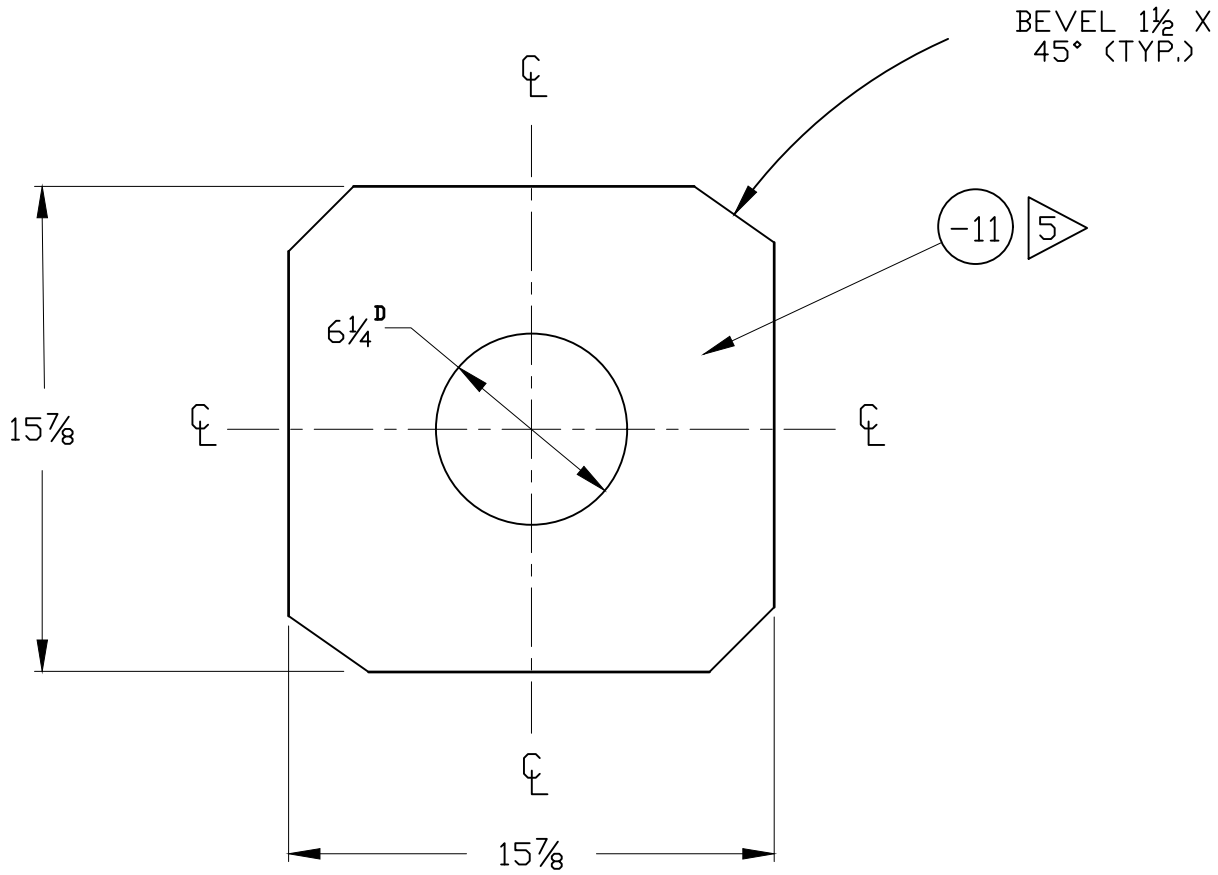

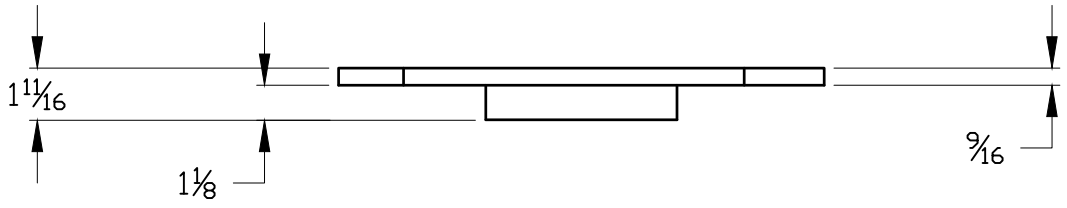

DETAIL B

SPECIAL PACKAGING INSTRUCTION	CODE ID 98747	SPI NO. (TPO) F01-073-4195
ITEM NOMENCLATURE ENGINE, GAS TURBINE, NONAIRCRAFT		SHEET 6 OF 10

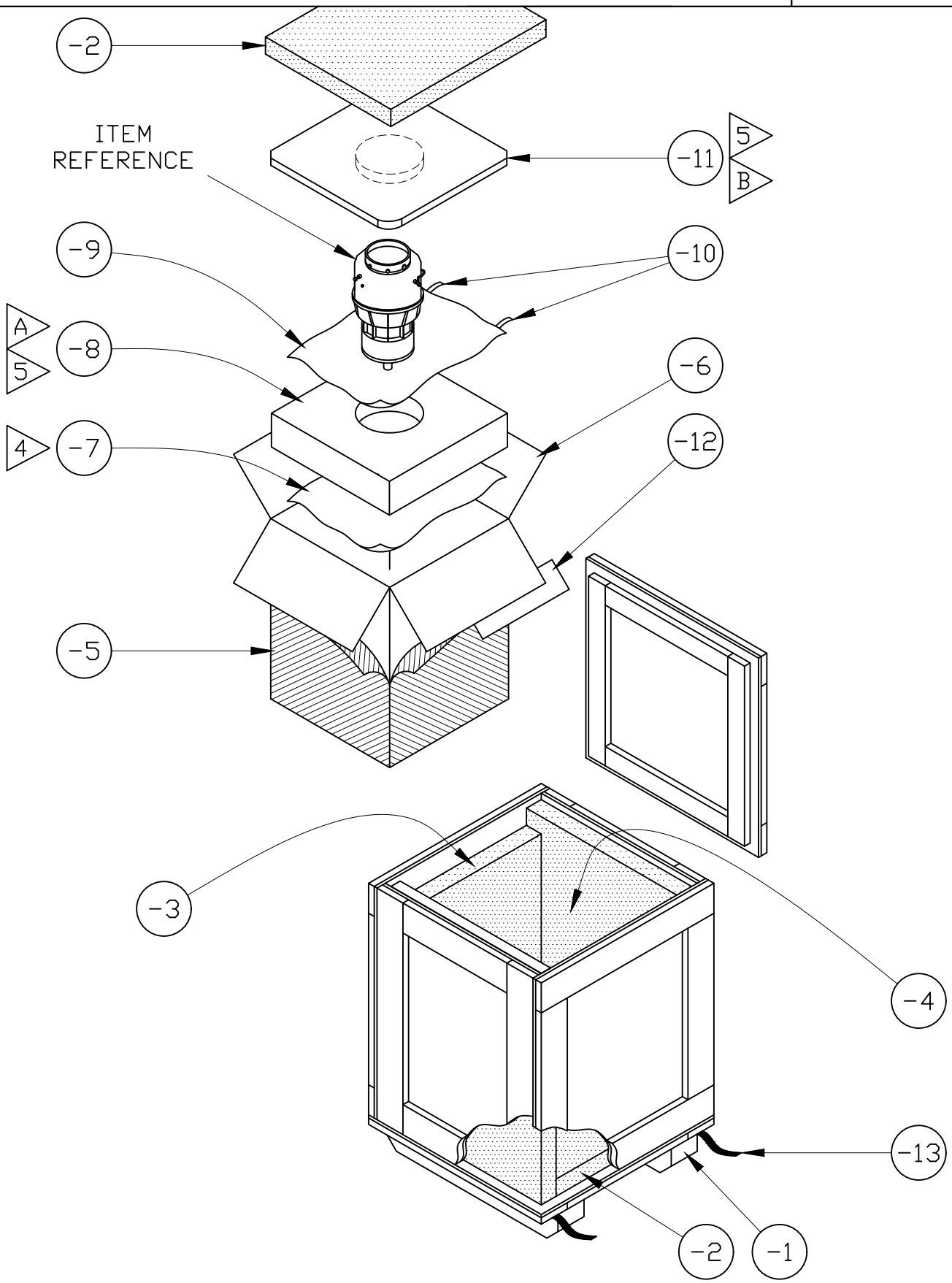

SPECIAL PACKAGING INSTRUCTION
(ALTERNATE PACK)

CODE ID	SPI NO. (TPO)
98747	F01-073-4195
	SHEET 7 OF 10

PART OR DRAWING NO.	NATIONAL STOCK NO.
160001-1100A	2835-01-308-3769 RP

ITEM NOMENCLATURE

ENGIN, GAS TURBINE, NONAIRCRAFT

MILITARY PRESERVATION IAW MIL-STD-2073-1

SERVICEABLE METHOD: 45 [2]

UNSERVICEABLE METHOD: 45 [2]

QUP 001
ICQ 000

CLEANING & DRYING: IAW MIL-STD-2073-1

PRESERVATIVE: N/A

MARKING IAW MIL-STD-129 [1]

SPECIAL MARKINGS:

A) SPI NO. F01-073-4195
MARK THE SPI NUMBER ON THE IDENTIFICATION SIDE OF CONTAINER.

B) REUSABLE CONTAINER & DUNNAGE DO NOT DESTROY.

ADDITIONAL SPECIAL MARKINGS FOR ITEMS WITH RESIDUAL FUEL:

A) DANGEROUS GOODS IN APPARATUS UN3363

B) TYPE AND FLASH POINT OF FUEL [3]

C) CLASS 9 LABEL

CLOSURE

LEVEL A: IAW: ACCORDING TO DRAWING
LEVEL B: IAW: ACCORDING TO DRAWING

PACKING AS SPECIFIED BELOW AND BILL OF MATERIALS

LEVEL	SPEC	STYLE	TYPE	CL	VRTY	GR	TR
A	8145-01-465-6635						
B	8145-01-465-6635						

	LEVEL A	LEVEL B
GROSS CU FT	5.361	5.361
GROSS WT LBS	109	109
DESIGN FRAGILITY G	50	50

	LENGTH	WIDTH	DEPTH
CNTR I.D.			
LEVEL A:			
LEVEL B:			
CNTR O.D.			
LEVEL A:	23 3/4	19 3/4	19 3/4
LEVEL B:	23 3/4	19 3/4	19 3/4
ITEM DIM	18 1/2	12	12
ITEM WT.	44 LBS		

CAUTION:
ITEMS CONTAINING RESIDUAL FUEL ARE CONSIDERED HAZARDOUS MATERIALS AND MUST BE PACKED IAW THE APPROPRIATE HAZARDOUS MATERIAL REGULATION AND CERTIFIED BY AUTHORIZED HAZARDOUS MATERIAL PERSONNEL

SPECIAL PACKAGING INSTRUCTION	CODE ID 98747	SPI NO. (TPO) F01-073-4195
ITEM NOMENCLATURE ENGINE, GAS TURBINE, NONAIRCRAFT		SHEET 8 OF 10

P/N	QTY REQD	NOMENCLATURE OR DESCRIPTION	SIZE: (INCHES UNLESS SPECIFIED) TOLERANCES ON FRAC. ± 1/8, DECIMAL ± .10, ANGLES ± 1°	MATERIAL SPECIFICATION
-5	A/R	TAPE, FILAMENT	1 X AS REQUIRED	ASTM D5330 TYPE I OR II
-4	1	WRAP	50 X 32	MIL-PRF-121 TYPE I
-3	A/R	SORBENT MATERIAL	AS REQUIRED	A-A-59759 TYPE II 4
-2	1	BAG, BARRIER	41 X 41 (ID)	MIL-DTL-117 TYPE I, CLASS E, STYLE 1
-1	A/R	CUHIONING	AS REQUIRED	PPP-C-1797 TYPE I 5

SPECIAL PACKAGING INSTRUCTION	CODE ID 98747	SPI NO. (TPO) F01-073-4195
ITEM NOMENCLATURE ENGINE, GAS TURBINE, NONAIRCRAFT		SHEET 9 OF 10

CAUTION NOTICES

NOTICE 1: ASSETS PACKAGED IN ACCORDANCE WITH THE PREVIOUS EDITION OF THIS SPI DO NOT REQUIRE REPACKAGING IF THE INTEGRITY OF THE SPI IS MAINTAINED.

NOTICE 2: SEE SPIRES FOR A COMPLETE LISTING OF NSN's ASSIGNED TO THIS SPI.

NOTICE 3: PACKAGING MATERIAL MAY BE SUBSTITUTED IF IT MEETS THE REQUIREMENTS OF MIL-STD-2073-1, PROVIDES EQUAL OR BETTER PROTECTION AND THERE IS NO INCREASED COST TO THE GOVERNMENT.

NOTICE 4: FOR LEVEL A PACKAGING REQUIREMENTS, LEVEL B PACKS SHALL BE OVERBOXED IN A LEVEL A SPECIFIED CONTAINER SHOWN ON PAGE 1 UNDER PACKAGING LEVEL A.

NOTICE 5: LEVEL A PROTECTION REQUIRED TO MEET THE MOST SEVERE WORLDWIDE SHIPMENT, HANDLING, AND STORAGE CONDITIONS. EXAMPLES OF SITUATIONS ARE: WAR RESERVE MATERIAL, MOBILIZATION, STRATEGIC AND THEATER DEPLOYMENT, OPEN STORAGE AND DECK LOADING. SECURITY ASSISTANCE ITEMS, INCLUDING FMS, ARE ESPECIALLY SUSCEPTIBLE TO DAMAGE DUE TO UNKNOWN AND UNFAVORABLE TRANSPORTATION, CLIMATIC, AND STORAGE CONDITIONS. PROVIDE LEVEL B PACKING UNLESS OTHERWISE DIRECTED BY THE PROCURING COUNTRY.

INTERNATIONAL STANDARDS FOR PHYTOSANITARY MEASURES
REVISION OF ISPM NO. 15
REVISION OF WOOD PACKAGING MATERIAL FOR INTERNATIONAL TRADE

THE FOLLOWING STATEMENT IS IN COMPLIANCE WITH THE UNITED NATIONS-IMPLEMENTED RESTRICTIONS ON WOOD PACKAGING MATERIAL (WPM). THIS REQUIREMENT IS SPECIFICALLY CONCERNED WITH INVASIVE SPECIES SUCH AS THE PINEWOOD NEMATODE. WPM IS DEFINED AS WOOD PALLETS, SKIDS, LOAD BOARDS, PALLET COLLARS, WOODEN BOXES, REELS, DUNNAGE, CRATES, FRAMES, AND CLEATS. THE STATEMENT BELOW CITES THE REQUIREMENTS IN DETAIL AND COVERS LUMBER FOR BUILDING CONTAINERS AND PALLETS USED FOR DELIVERIES, RESULTING IN SHIPMENTS WORLDWIDE (DIRECT, OR THROUGH AIR LOGISTICS CENTERS (ALC), CONTAINER CONSOLIDATION POINTS (CCP), OR OTHER BASES).

WOODEN LUMBER, WOODEN PALLET AND PACKAGING/CONTAINER STATEMENT:

ALL WOODEN LUMBER, WOODEN PALLETS, AND WOODEN CONTAINERS PRODUCED ENTIRELY OR IN PART OF WOOD PACKAGING MATERIAL (WPM) SHALL BE CONSTRUCTED FROM DEBARKED WOOD IN ADDITION TO THE APPLICATION OF HEAT-TREATED (HT) MATERIAL (HT TO 56 DEGREES CENTIGRADE OR 133 DEGREES FAHRENHEIT FOR 30 MINUTES). CERTIFICATION/MARKING IS REQUIRED BY AN ACCREDITED AGENCY RECOGNIZED BY THE AMERICAN LUMBER STANDARDS COMMITTEE (ALSC). FOR REFERENCE DOCUMENTATION, SEE LATEST REVISION OF "INTERNATIONAL STANDARDS FOR PHYTOSANITARY MEASURES (ISPM NO. 15), "REGULATION OF WOOD PACKAGING MATERIAL IN INTERNATIONAL TRADE."

NOTES

1. I.D. TAGS MUST BE STAMPED BY RESPONSIBLE PARTY SIGNIFYING ITEM HAS BEEN PREPARED FOR SHIPMENT/STORAGE IAW APPLICABLE T.O.

2. ITEMS WHICH HAVE BEEN DRAINED AND PURGED MUST BE ACCOMPANIED WITH A COMPLETED AFTO FORM 20 OR LOCALLY PRODUCED DOCUMENTATION CERTIFYING THE ITEM HAS BEEN PROPERLY DRAINED AND PURGED. ITEMS CONTAINING RESIDUAL FUEL MUST BE PACKED IN A LEAK-PROOF LINER, WITH SPECIFIED SORBENT MATERIAL IN A STRONG OUTER CONTAINER. MARK, LABEL, AND DOCUMENT THE PACKAGE AS DANGEROUS GOODS IN APPARATUS, UN3363, CLASS 9 LABEL.

3. **IF APPLICABLE:** MARK TYPE AND FLASH POINT OF PURGING FLUID IAW AFI 24-602v2, PARA 2.16.6.3.7 AND AFMAN 24-604, A.3.3.9.5.4

4. WRAP FUEL PUMP ENTIRELY WITH SORBENT MATERIAL, REF.-3. THIS IS NOT A REQUIREMENT FOR NEW ITEMS. SORBENT MATERIAL MUST BE INSPECTED PRIOR TO REUSE.

5. IF NEEDED, USE REF.-1 FOR CUSHIONING PURPOSES.

SPECIAL PACKAGING INSTRUCTION	CODE ID 98747	SPI NO. (TPO) F01-073-4195
ITEM NOMENCLATURE ENGINE, GAS TURBINE, NONAIRCRAFT		SHEET 10 OF 10

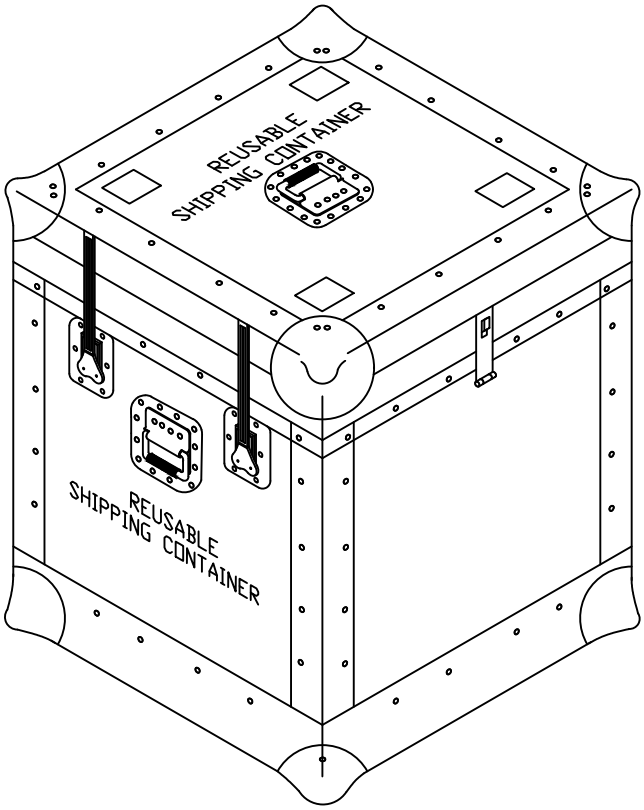

SPECIAL PACKAGING INSTRUCTION	CODE ID 98747	SPI NO. (TPO) F01-208-0169
ITEM NOMENCLATURE GEARBOX, ACCESSORY DRIVE, TURBINE ENGINE		SHEET 2 OF 8

P/N	QTY REQD	NOMENCLATURE OR DESCRIPTION	SIZE: (INCHES UNLESS SPECIFIED) TOLERANCES ON FRAC. ± ⅛, DECIMAL ± .10, ANGLES ± 1°	MATERIAL SPECIFICATION
-21	16	STRAP, CORNER (LVL A ONLY)	12 X 3/4 X .015	ASTM D3953 TYPE 2, RD, FIN. A
-20	14	WASHER, PLAIN	3/8	ASME B18.21.1
-19	14	BOLT, LAG	3 X 3/8	ASME B18.2.1
-18	19	NUT	3/8	ASME B18.2.2
-17	19	WASHER, PLAIN	3/8	ASME B18.21.1
-16	5	BOLT, CARRIAGE	3 1/2 X 3/8	ASME B18.5
-15	2	BOLT, CARRIAGE	8 1/2 X 3/8	ASME B18.5
-14	2	BOLT, CARRIAGE	7 X 3/8	ASME B18.5
-13	4	WASHER, TORQUE	3/8	LOCAL PURCHASE
-12	6	BOLT, CARRIAGE	6 X 3/8	ASME B18.5
-11	A/R	CUSHION, RUBBER	1/8 X AS REQUIRED	MIL-PRF-1149 TYPE I, CLASS 1 C D
-10	1	BLOCK, HOLD DOWN	26 1/2 X 6 3/4 X 2 1/4	A-A-55057 TYPE A D
-9	1	BLOCK, HOLD DOWN	23 1/2 X 5 X 2 1/4	A-A-55057 TYPE A C
-8	A/R	TAPE, MASKING	1 X AS REQUIRED	ASTM D6123 TYPE I OR II
-7	1	WRAP	AS REQUIRED	MIL-PRF-121 TYPE I
-6	1	CUSHION	33 X 18 1/2 X 1/4	A-A-59135 CLASS 1, GRADE A
-5	1	BLOCKING	13 3/8 X 3 1/4 X 1 7/8	A-A-55057 TYPE A B
-4	1	BLOCKING	18 3/4 X 3 1/2 X 1 7/8	A-A-55057 TYPE A A
-3	1	BASE	50 1/2 X 30 X 3/4	A-A-55057 TYPE A
-2	2	HEADER	2 X 2 (NOM) X 50 1/2	ASTM D6199 CLASS 2
-1	3	SKID	4 X 4 (NOM) X 32 1/4	ASTM D6199 CLASS 2

SPECIAL PACKAGING INSTRUCTION	CODE ID 98747	SPI NO. (TPO) F01-208-0169
ITEM NOMENCLATURE GEARBOX, ACCESSORY DRIVE, TURBINE ENGINE		SHEET 3 OF 8

CAUTION NOTICES

NOTICE 1: ASSETS PACKAGED IN ACCORDANCE WITH PREVIOUS EDITIONS OF THIS SPI DO NOT REQUIRE REPACKAGING IF THE INTEGRITY OF THE SPI IS MAINTAINED.

NOTICE 2: SEE SPIRES FOR A COMPLETE LISTING OF NSN's ASSIGNED TO THIS SPI.

NOTICE 3: PACKAGING MATERIAL MAY BE SUBSTITUTED IF IT MEETS THE REQUIREMENTS OF MIL-STD-2073, PROVIDES EQUAL OR BETTER PROTECTION AND THERE IS NO INCREASED COST TO THE GOVERNMENT.

NOTICE 4: LEVEL A PROTECTION REQUIRED TO MEET THE MOST SEVERE WORLDWIDE SHIPMENT, HANDLING, AND STORAGE CONDITIONS. EXAMPLES OF SITUATIONS ARE: WAR RESERVE MATERIAL, MOBILIZATION, STRATEGIC AND THEATER DEPLOYMENT, OPEN STORAGE AND DECK LOADING. SECURITY ASSISTANCE ITEMS, INCLUDING FMS, ARE ESPECIALLY SUSCEPTIBLE TO DAMAGE DUE TO UNKNOWN AND UNFAVORABLE TRANSPORTATION, CLIMATIC, AND STORAGE CONDITIONS. PROVIDE LEVEL B PACKING UNLESS OTHERWISE DIRECTED BY THE PROCURING COUNTRY.

INTERNATIONAL STANDARDS FOR PHYTOSANITARY MEASURES
REVISION OF ISPM NO. 15
REVISION OF WOOD PACKAGING MATERIAL FOR INTERNATIONAL TRADE

THE FOLLOWING STATEMENT IS IN COMPLIANCE WITH THE UNITED NATIONS-IMPLEMENTED RESTRICTIONS ON WOOD PACKAGING MATERIAL (WPM). THIS REQUIREMENT IS SPECIFICALLY CONCERNED WITH INVASIVE SPECIES SUCH AS THE PINEWOOD NEMATODE. WPM IS DEFINED AS WOOD PALLETS, SKIDS, LOAD BOARDS, PALLET COLLARS, WOODEN BOXES, REELS, DUNNAGE, CRATES, FRAMES, AND CLEATS. THE STATEMENT BELOW CITES THE REQUIREMENTS IN DETAIL AND COVERS LUMBER FOR BUILDING CONTAINERS AND PALLETS USED FOR DELIVERIES, RESULTING IN SHIPMENTS WORLDWIDE (DIRECT, OR THROUGH AIR LOGISTICS CENTERS (ALC), CONTAINER CONSOLIDATION POINTS (CCP), OR OTHER BASES).

WOODEN LUMBER, WOODEN PALLET AND PACKAGING/CONTAINER STATEMENT:

ALL WOODEN LUMBER, WOODEN PALLETS, AND WOODEN CONTAINERS PRODUCED ENTIRELY OR IN PART OF WOOD PACKAGING MATERIAL (WPM) SHALL BE CONSTRUCTED FROM DEBARKED WOOD IN ADDITION TO THE APPLICATION OF HEAT-TREATED (HT) MATERIAL (HT TO 56 DEGREES CENTIGRADE OR 133 DEGREES FAHRENHEIT FOR 30 MINUTES). CERTIFICATION/MARKING IS REQUIRED BY AN ACCREDITED AGENCY RECOGNIZED BY THE AMERICAN LUMBER STANDARDS COMMITTEE (ALSC). FOR REFERENCE DOCUMENTATION, SEE LATEST REVISION OF "INTERNATIONAL STANDARDS FOR PHYTOSANITARY MEASURES (ISPM NO. 15), "REGULATION OF WOOD PACKAGING MATERIAL IN INTERNATIONAL TRADE."

NOTES

1. ALL OPENINGS MUST BE CAPPED AND PLUGGED PRIOR TO PACKAGING.

SPECIAL PACKAGING INSTRUCTION	CODE ID 98747	SPI NO. (TPO) F01-208-0169
ITEM NOMENCLATURE GEARBOX, ACCESSORY DRIVE, TURBINE ENGINE		SHEET 4 OF 8

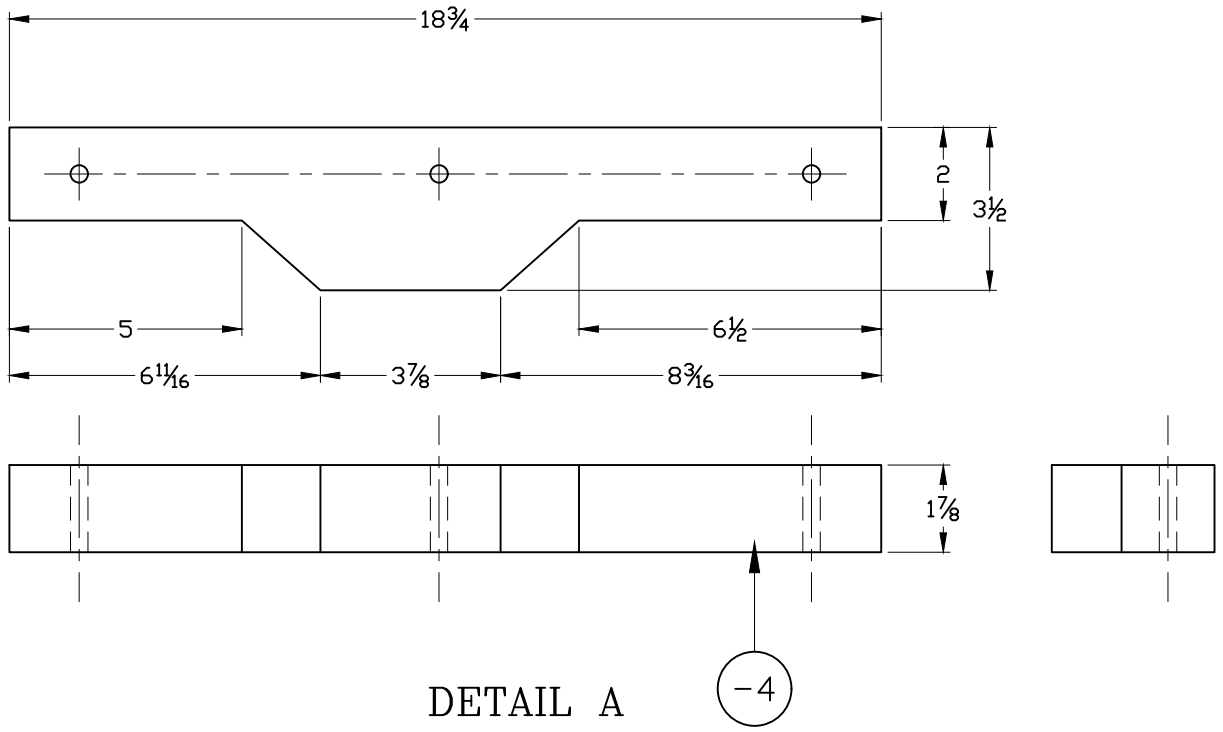

DETAIL A

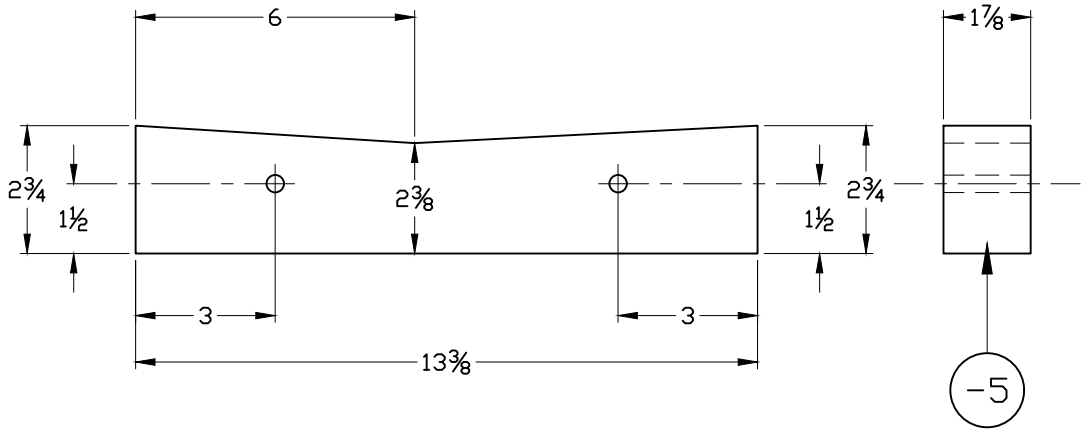

DETAIL B

SPECIAL PACKAGING INSTRUCTION	CODE ID 98747	SPI NO. (TPO) F01-208-0169
ITEM NOMENCLATURE GEARBOX, ACCESSORY DRIVE, TURBINE ENGINE		SHEET 5 OF 8

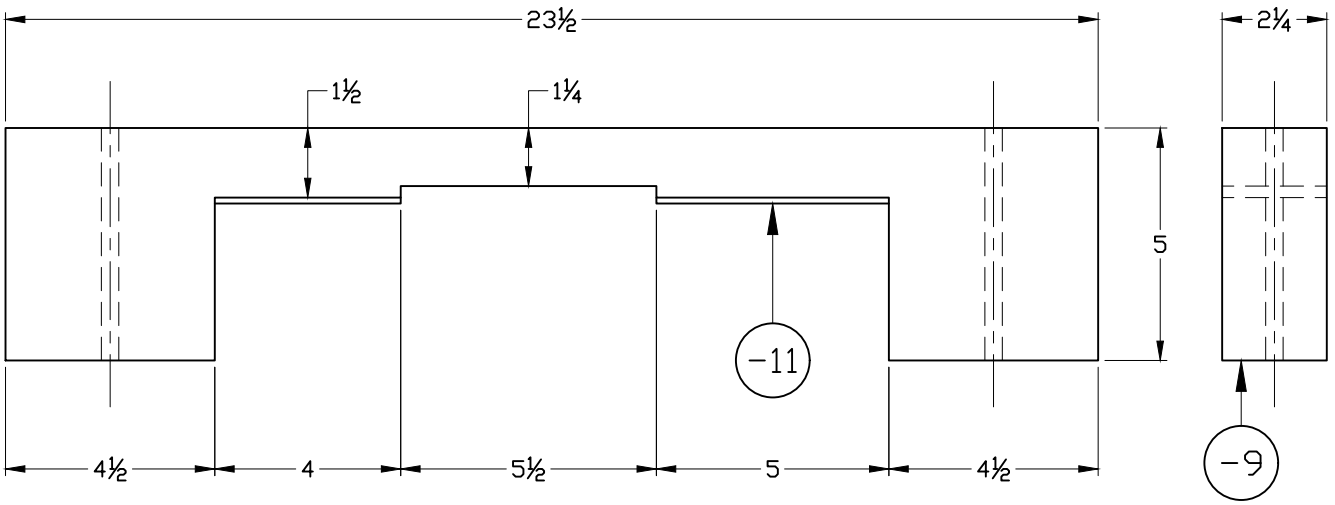

DETAIL C

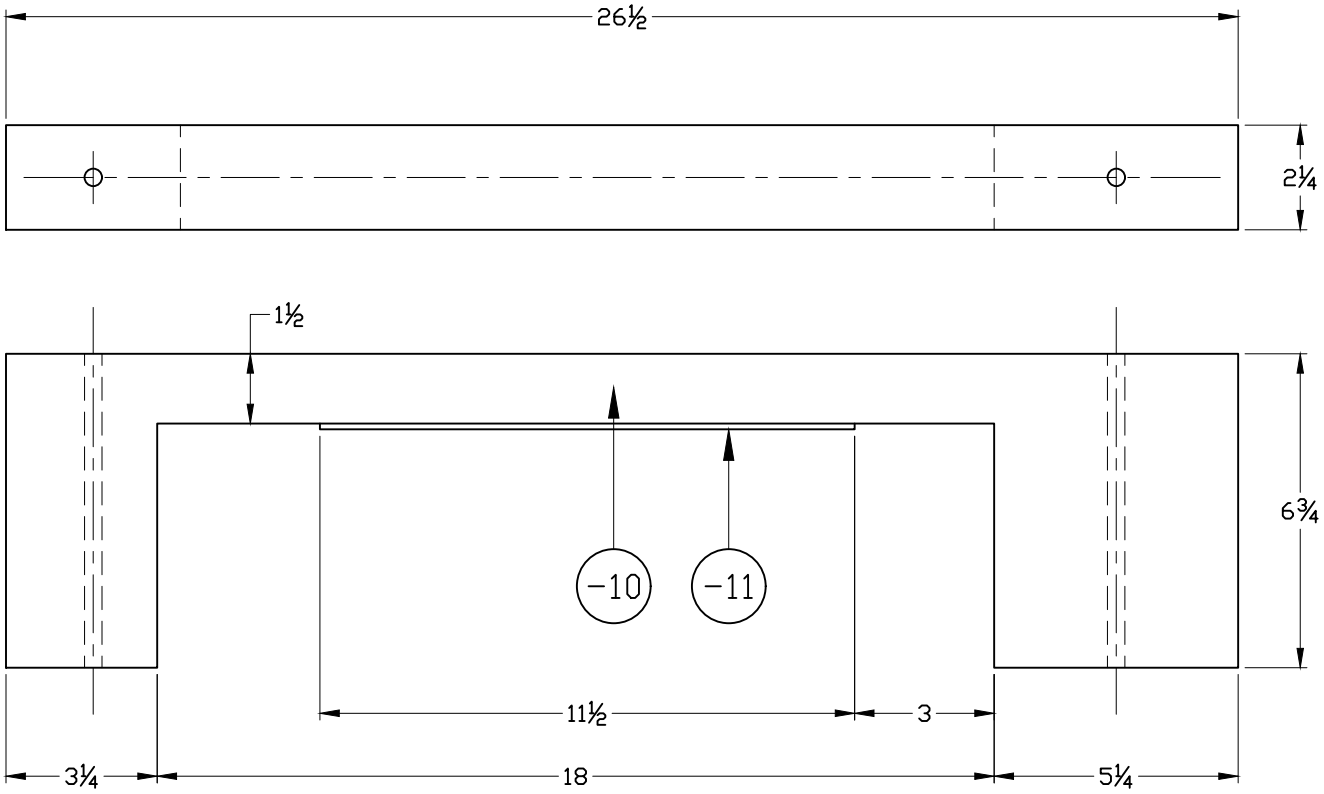

DETAIL D

SPECIAL PACKAGING INSTRUCTION	CODE ID 98747	SPI NO. (TPO) F01-208-0169
ITEM NOMENCLATURE GEARBOX, ACCESSORY DRIVE, TURBINE ENGINE		SHEET 6 OF 8

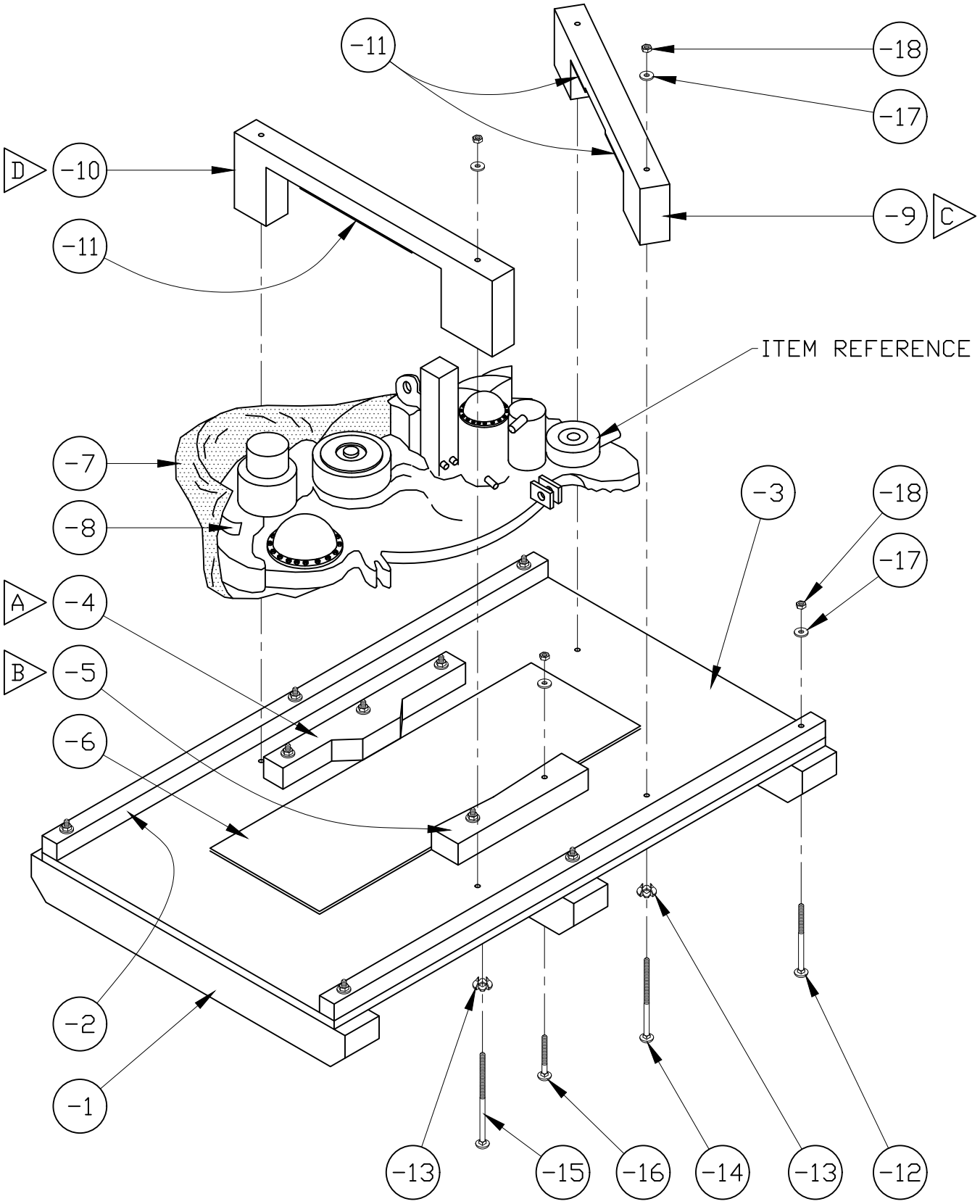

SPECIAL PACKAGING INSTRUCTION	CODE ID 98747	SPI NO. (TPO) F01-208-0169
ITEM NOMENCLATURE GEARBOX, ACCESSORY DRIVE, TURBINE ENGINE		SHEET 7 OF 8

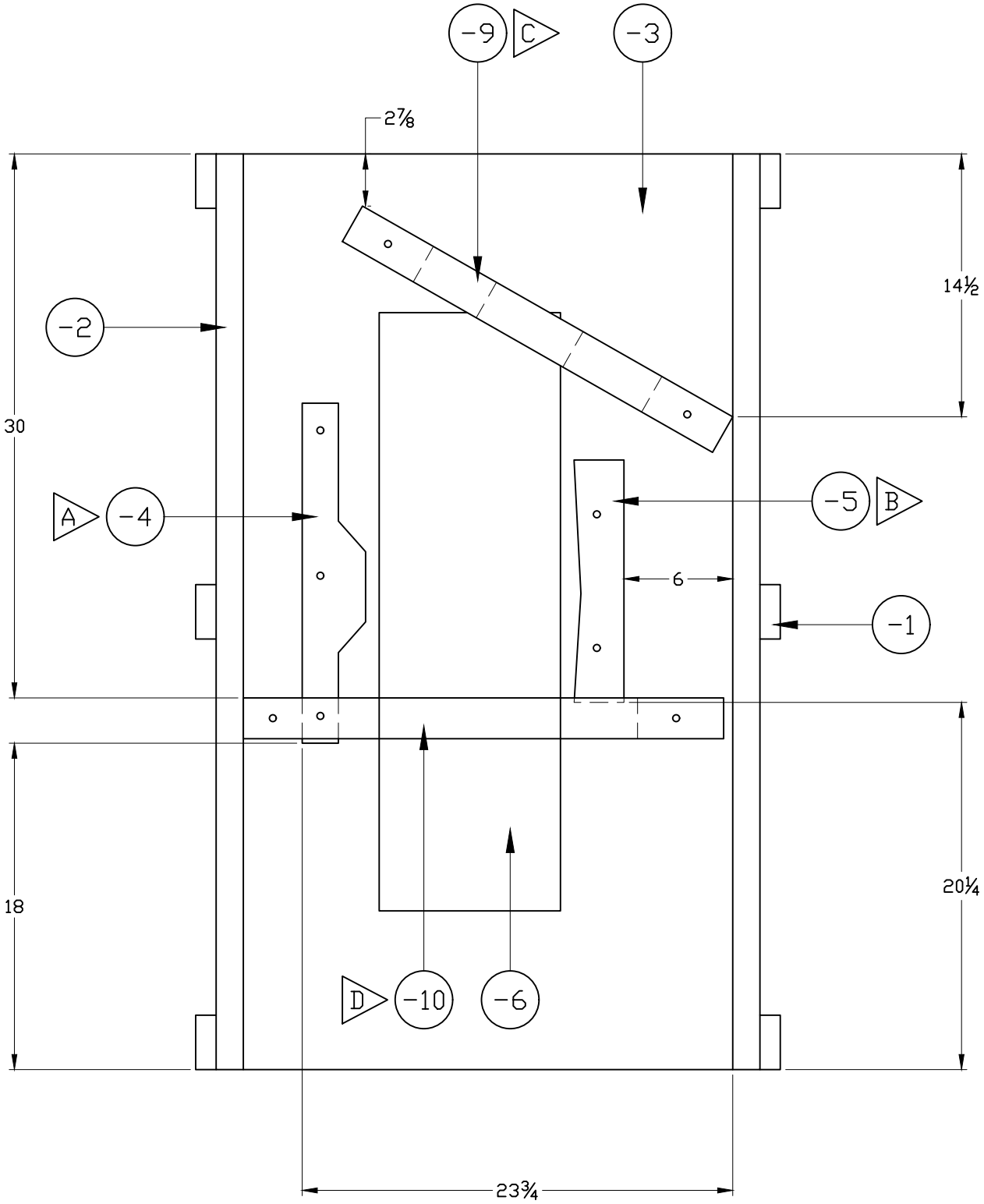
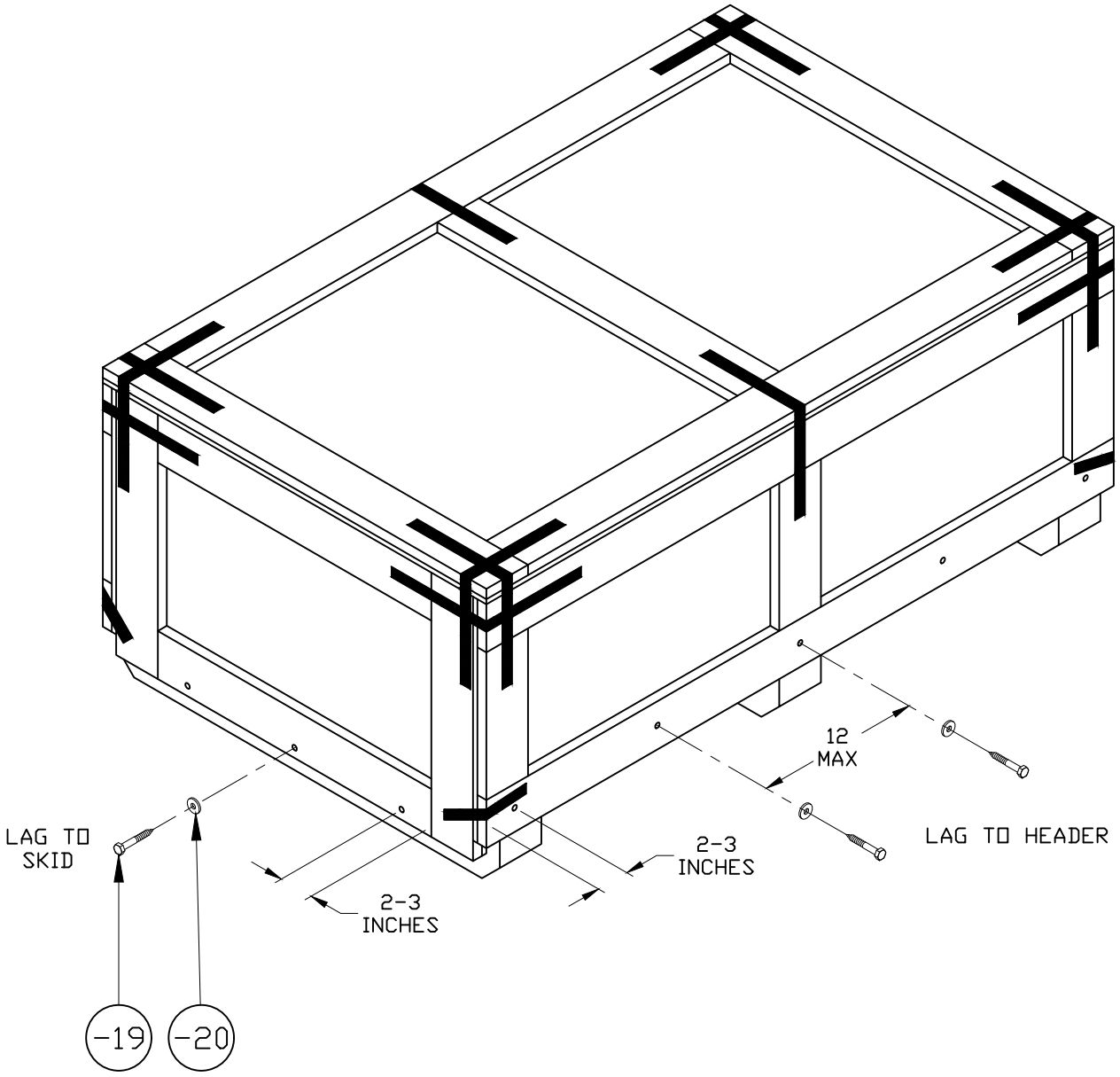
SPECIAL PACKAGING INSTRUCTION	CODE ID 98747	SPI NO. (TPO) F01-208-0169
ITEM NOMENCLATURE GEARBOX, ACCESSORY DRIVE, TURBINE ENGINE		SHEET 8 OF 8