GLACIER BAY NATIONAL PARK AND PRESERVE

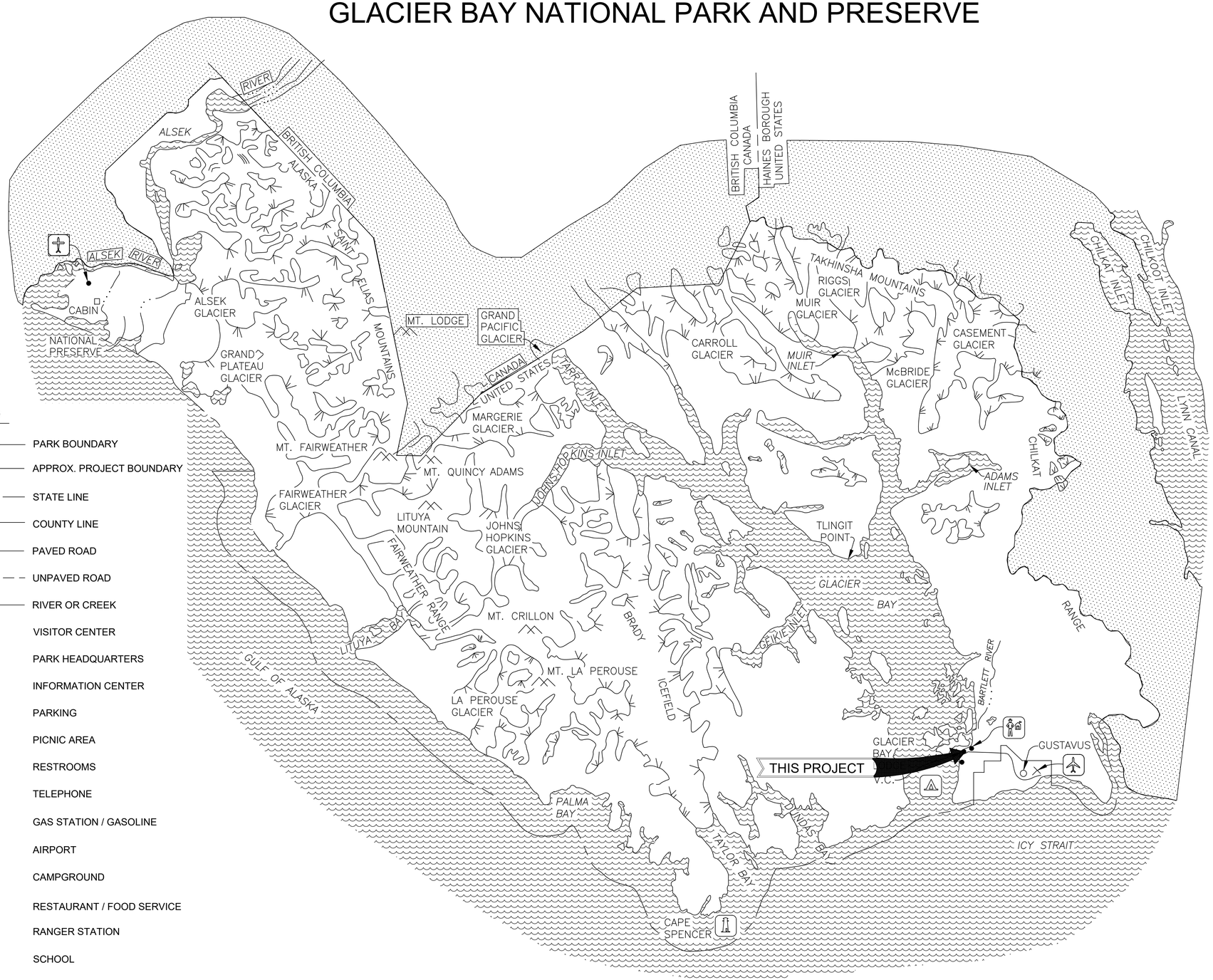

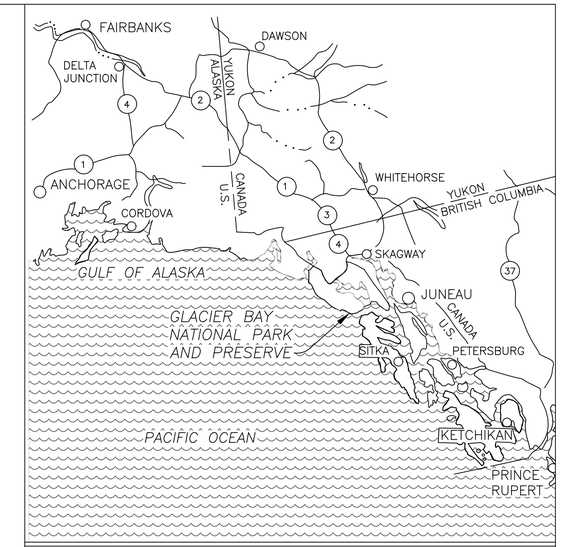

ALASKA

35 0 35
SCALE OF MILES

LEGEND

- PARK BOUNDARY
- APPROX. PROJECT BOUNDARY
- STATE LINE
- COUNTY LINE
- PAVED ROAD
- UNPAVED ROAD
- RIVER OR CREEK
- V.C. VISITOR CENTER
- HQ. PARK HEADQUARTERS
- INFORMATION CENTER
- PARKING
- PICNIC AREA
- RESTROOMS
- TELEPHONE
- GAS STATION / GASOLINE
- AIRPORT
- CAMPGROUND
- RESTAURANT / FOOD SERVICE
- RANGER STATION
- SCHOOL
- AMPHITHEATER
- LODGING
- STORE

SCALE OF FEET

2,000 0 2,000 4,000 6,000

50 0 50 100 150

SCALE OF METERS

100% COMPLETE
CONSTRUCTION DRAWINGS

UNITED STATES
DEPARTMENT OF THE INTERIOR

NATIONAL PARK SERVICE
DENVER SERVICE CENTER

TITLE OF DRAWING
REHAB WATER SERVICE LINES
AT BARTLETT COVE HOUSING

LOCATION WITHIN PARK
BARTLETT COVE

NAME OF PARK
GLACIER BAY NATIONAL PARK AND PRESERVE

REGION	BOROUGH	STATE
ALASKA	HOONAH	ALASKA

DRAWING NO.
132
187563

PKG. NO.
307
989A

SHEET 1 OF 20

CIVIL DRAWINGS LEGEND - EXISTING

- EXISTING - MAJOR CONTOUR (140)
- EXISTING - MINOR CONTOUR
- EXISTING - TOP OF BANK
- EXISTING - TOE OF BANK
- EXISTING - DITCH LINE
- EXISTING - TREE LINE
- EXISTING - EDGE OF ASPHALT
- EXISTING - EDGE OF GRAVEL
- EXISTING - ROAD CENTER
- EXISTING - ROAD SHOULDER
- EXISTING - TRAIL OR FOOT PATH
- EXISTING - BUILDING
- EXISTING - BUILDING OVERHANG
- EXISTING - BUILDING - MISCELLANEOUS
- EXISTING - DECK
- EXISTING - STEPS
- EXISTING - GENERAL CONCRETE SLAB LINE
- EXISTING - TOP OF RETAINING WALL
- EXISTING - BOTTOM OF RETAINING WALL
- EXISTING - WOODEN VERTICAL BOARD FENCE
- EXISTING - CHAIN LINK FENCE
- EXISTING - FENCE GATE
- EXISTING - TIMBER
- EXISTING - SIGN
- EXISTING - CULVERT
- EXISTING - MISCELLANEOUS
- EXISTING - UNDERGROUND COMMUNICATIONS (UGT)
- EXISTING - UNDERGROUND GAS (NG)
- EXISTING - UNDERGROUND POWER (UGP)
- EXISTING - SEWER FORCE MAIN (EFM)
- EXISTING - SEWER FORCE MAIN FROM NPS AS-BUILTS (EFM)
- EXISTING - UNDERGROUND STORM WATER LINE (ESW)
- EXISTING - UNDERGROUND WATER LINE (EW)
- EXISTING - UTILITY - MISCELLANEOUS

POINT SYMBOLOGY

- DJ&A CONTROL POINT
- 125.77 — EXISTING - SPOT ELEVATION
- E — EXISTING ELECTRIC MANHOLE
- EM — EXISTING ELECTRIC METER
- E — EXISTING ELECTRIC TRANSFORMER
- E — EXISTING ELECTRIC MISC - OUTLET OR OTHER MISC. ELECTRIC
- EXISTING LIGHT POLE
- T — EXISTING TELEPHONE/COMMUNICATIONS PEDESTAL
- GW — EXISTING GAS WELL OR MANHOLE
- GWM — EXISTING GROUNDWATER MONITORING WELL
- EXISTING STORM ROOF DROP INLET/OUTLET - POINT
- S — EXISTING SANITARY SEWER MANHOLE
- EXISTING SANITARY SEWER CLEANOUT ACCESS OR TANK RISER
- FM — EXISTING SANITARY SEWER FORCE MAIN VALVE
- WV — EXISTING WATER VALVE
- W — EXISTING WATER WELL
- EXISTING WATER HYDRANT
- WM — EXISTING WATER METER
- W — EXISTING WATER MANHOLE OR WATER TANK LID
- EXISTING WATER BLOWOFF
- EXISTING WATER HOSEBIB, FAUCET, OR SPIGOT OUTLET
- MH — EXISTING MISCELLANEOUS MANHOLE OR GENERAL UNDERGROUND UTILITY BOX
- T — EXISTING UTILITY MARKER
- EXISTING SIGN (SINGLE POST)
- EXISTING BOLLARD
- EXISTING GUY WIRE (THE GROUND CONNECTION POINT)
- EXISTING LARGE ROCK OR BARRIER BOLLARD TYPE ROCK
- EXISTING DECIDUOUS TREE (AS NOTED)
- EXISTING CONIFEROUS TREE (AS NOTED)
- ETE — EXISTING - BUILDING FINISHED FLOOR ELEVATION SURVEY SHOT

PROFILE VIEW ELEVATION BAND (BOTTOM OF GRAPH)

3224.52 — FINISHED GROUND ELEV. AT CENTERLINE OF PIPE

1+00

3220.00 — TOP OF PIPE ELEV. AT CENTERLINE OF PIPE

CIVIL DRAWINGS LEGEND - PROPOSED

- PROPOSED - 6" WATER MAIN (W 6")
- PROPOSED - 8" WATER MAIN (W 8")
- PROPOSED - 10" WATER MAIN (W 10")
- GV — PROPOSED - GATE VALVE
- ARV — PROPOSED - AIR RELEASE VALVE
- PROPOSED - FIRE HYDRANT
- PROPOSED - BLOWOFF VALVE
- WM — PROPOSED - WATER METER

ABBREVIATIONS

APPROX.	APPROXIMATE
BLDG.	BUILDING
COMM.	COMMUNICATIONS
CONC.	CONCRETE
CP	CONTROL POINT
CMP	CORRUGATED METAL PIPE
CPP	CORRUGATED PLASTIC PIPE
D	DIAMETER
DI	DUCTILE IRON
ELEV.	ELEVATION
FM	FORCE MAIN
HC	HANDICAPPED
HDPE	HIGH-DENSITY POLYETHYLENE
HQ	HEADQUARTERS
INV.	INVERT
MH	MANHOLE
RD.	ROAD
SAN.	SANITARY
ST.	STREET
TYP.	TYPICAL
UTIL.	UTILITY
W	WATER

SHEET INDEX

SHEET NO.	SUB-SHEET NO.	SHEET TITLE
1	-	COVER
2	C0.1	LEGEND, GENERAL NOTES, AND ABBREVIATIONS
3	C0.2	EXISTING SITE PLAN AND CONTROL POINT MAP
4	C0.3	DEMOLITION PLAN
5	C0.4	PHASING PLAN
6	C1.0	WATER SYSTEM SHEET INDEX
7	C1.1	WATER SYSTEM LAYOUT POINTS
8	C1.2	WATER P&P STA 10+00 TO 15+00
9	C1.3	WATER P&P STA 15+00 TO 20+00
10	C1.4	WATER P&P STA 20+00 TO 25+00
11	C1.5	WATER P&P STA 100+00 TO 105+00
12	C1.6	WATER P&P STA 105+00 TO 109+70
13	C1.7	WATER P&P STA 200+00 TO 205+00
14	C1.8	WATER P&P STA 205+00 TO 210+00
15	C1.9	WATER P&P STA 210+00 TO 215+27
16	C2.0	WATER SYSTEM CONNECTION DETAILS 1
17	C2.1	WATER SYSTEM CONNECTION DETAILS 2
18	C2.2	WATER SYSTEM DETAILS 1
19	C2.3	WATER SYSTEM DETAILS 2
20	C2.4	WATER SYSTEM DETAILS 3

GENERAL NOTES

1. THE UTILITIES SHOWN IN THESE CONSTRUCTION DRAWINGS ARE INDICATED IN ACCORDANCE WITH AVAILABLE RECORDS. ALL UTILITIES MAY NOT BE SHOWN, AND THOSE THAT ARE SHOWN MAY NOT BE SHOWN ACCURATELY. THE CONTRACTOR SHALL BE RESPONSIBLE FOR FIELD LOCATING TO DETERMINE THE EXACT LOCATIONS, ELEVATIONS, AND SIZES OF ALL EXISTING UTILITIES. THE CONTRACTOR SHALL BE RESPONSIBLE FOR LOCATING ALL NPS AND NON-NPS-OWNED UTILITIES. REPAIR OR REPLACE ANY DAMAGED EXISTING UTILITIES, AS SPECIFIED IN SECTION 011100 "SUMMARY OF WORK". THE CONTRACTOR SHALL MAINTAIN A MINIMUM OF 2 FEET SEPARATION BETWEEN ALL EXISTING DRY UTILITIES AND NEW WATER AND SEWER INSTALLATIONS.
2. MAINTAIN SANITARY SEWER SERVICE TO ALL BUILDINGS DURING CONSTRUCTION. INSTALL BY-PASS PIPING/PUMPING AS NEEDED TO MAINTAIN SERVICE, AS SPECIFIED IN SECTION 333000 "SANITARY SEWER COLLECTION SYSTEMS".
3. MAINTAIN WATER SERVICE TO ALL BUILDINGS DURING CONSTRUCTION. INSTALL TEMPORARY WATER PIPING & APPURTENANCES AS NEEDED. SHORT INTERRUPTIONS FOR TIE-INS ARE ALLOWED, AS SPECIFIED IN SECTION 011100, "SUMMARY OF WORK".
4. ALL MINOR OBSTRUCTIONS MAY NOT BE SHOWN ON CONSTRUCTION DRAWINGS. THE CONTRACTOR SHALL REVIEW THE SITE PLANS AND DETERMINE THE CONDITIONS WITH REGARD TO THE EXISTENCE OF FENCES, DRIVEWAYS, TREES, BOULDERS, SIDEWALKS, CULVERTS, UTILITIES AND OTHER SITE IMPROVEMENTS AND MISCELLANEOUS OBSTACLES THAT MAY INTERFERE WITH CONSTRUCTION PRIOR TO SUBMITTING PROPOSALS.
5. PROVIDE TEMPORARY SUPPORT FOR EXISTING WET (WATER, SANITARY SEWER, ETC.) AND DRY UTILITIES (GAS, POWER, ETC.) THAT CROSS THE TRENCH UNTIL BACKFILLING OF THE TRENCH IS COMPLETE.
6. ASBESTOS CEMENT PIPE TO BE ABANDONED SHALL REMAIN IN PLACE. CUTTING IS NOT PERMITTED. IF AVOIDANCE IS NOT FEASIBLE, THE CONTRACTOR SHALL COORDINATE REMOVAL WITH THE CO. ALL OTHER ABANDONED PIPE MATERIALS MAY BE CUT IN PLACE AT TRENCH WALLS.
7. CONSTRUCTION SHALL COMPLY WITH ENVIRONMENTAL PROTECTION AGENCY REGULATIONS, OCCUPATIONAL SAFETY AND HEALTH ADMINISTRATION, AND STATE OF ALASKA REGULATIONS.
8. THE CONTRACTOR SHALL ONLY DISTURB WITHIN THE LIMITS OF DISTURBANCE SPECIFIED AND SHOWN ON THE CONSTRUCTION DRAWINGS. NO GROUND DISTURBANCE SHALL OCCUR OUTSIDE THE DISTURBANCE LIMITS UNLESS APPROVED BY THE CONTRACTING OFFICER. ALL DISTURBED AREAS MUST BE RESTORED TO PRE-CONSTRUCTION OR BETTER CONDITIONSPRIOR TO THE COMPLETION OF WORK.
9. THE CONTRACTOR IS RESPONSIBLE FOR PREPARING AND MAINTAINING A STORM WATER POLLUTION PREVENTION PLAN (SWPPP), AS SPECIFIED IN SECTION 015723. THE CONTRACTOR SHALL NOT INTRODUCE OR TRANSPORT EXOTIC AND NON-NATIVE PLANTS INTO THE PARK. IT WILL BE THE CONTRACTOR'S RESPONSIBILITY TO MAINTAIN ROADSIDE DITCHES AND SWALES AND PREVENT EROSION THROUGHOUT THE PROJECT.
10. THE CONTRACTOR WILL COORDINATE ALL WORK WITH THE NPS-PROVIDED ARCHEOLOGICAL MONITOR WHEN TRENCHING OR EXCAVATING.
11. STRIP TOPSOIL AND STOCKPILE FOR REPLACEMENT AS SPECIFIED IN ALL AREAS OF EXCAVATION AND DISTURBANCE.
12. RESTORE ALL SURFACES DISTURBED AS SPECIFIED AND SHOWN ON THE CONSTRUCTION DRAWINGS.
13. CONTRACTOR SHALL MAINTAIN SAFE AND CONTINUOUS PEDESTRIAN ACCESS THROUGHOUT CONSTRUCTION. A PEDESTRIAN PHASING PLAN SHALL BE DEVELOPED TO ADDRESS TEMPORARY ROUTES, SIGNAGE, AND PROTECTIVE MEASURES. ANY MODIFICATIONS TO PEDESTRIAN ACCESS REQUIRE PRIOR APPROVAL FROM THE CONTRACTING OFFICER.
14. THE CONTRACTOR SHALL LIMIT ROAD CLOSURES TO HALF-WIDTH TO ENSURE CONTINUOUS ACCESS FOR NPS EMERGENCY AND OPERATIONS VEHICLES. FLAGGERS MAY BE USED TO CONTROL GENERAL TRAFFIC, WITH WAIT TIMES NOT EXCEEDING 10 MINUTES.
15. AN NPS ARCHAEOLOGICAL MONITOR IS REQUIRED TO BE PRESENT DURING ALL CONSTRUCTION EXCAVATION ACTIVITY.
16. VERTICAL DEFLECTIONS IN HDPE PIPE SHALL BE ACHIEVED USING THE MANUFACTURER'S RECOMMENDED BENDING RADIUS WHENEVER POSSIBLE. WHERE THE REQUIRED DEFLECTION EXCEEDS THE ALLOWABLE BENDING RADIUS, VERTICAL BENDS OR FITTINGS SHALL BE USED.
17. WRAP ALL DIRECT BURY CAST IRON OR DUCTILE IRON PIPE AND FITTINGS INCLUDING HYDRANTS, VALVE BOXES, CURB BOXES, AND ALL OTHER METAL PARTS AND SURFACES, IN POLYETHYLENE ENCASEMENT.

DESIGNED: EA CADD: EA TECH. REVIEW: BE DATE: 03/07/2025	SUB SHEET NO. C0.1	TITLE OF SHEET LEGEND GENERAL NOTES AND ABBREVIATIONS GLACIER BAY NATIONAL PARK AND PRESERVE	DRAWING NO. 132 187563 PMIS/PKG NO. 307989A SHEET 2 OF 20

2025-03-06TYLER.FRANCISC:\DJA-PW\WORK\DJA-PROD\DMS07407

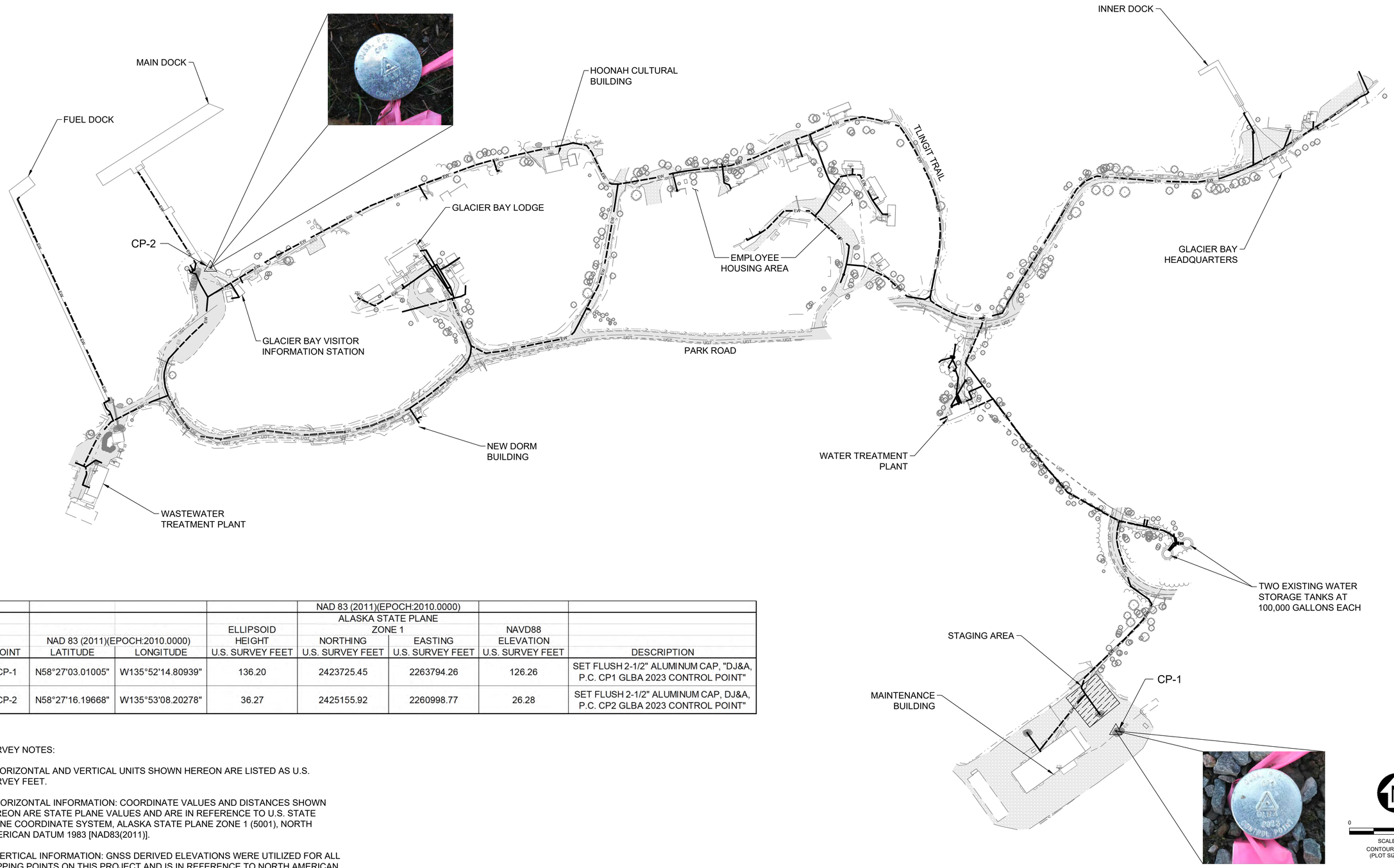

				NAD 83 (2011)(EPOCH:2010.0000)			
				ALASKA STATE PLANE			
			ELLIPSOID	ZONE 1		NAVD88	
	NAD 83 (2011)(EPOCH:2010.0000)		HEIGHT	NORTHING	EASTING	ELEVATION	
POINT	LATITUDE	LONGITUDE	U.S. SURVEY FEET	U.S. SURVEY FEET	U.S. SURVEY FEET	U.S. SURVEY FEET	DESCRIPTION
CP-1	N58°27'03.01005"	W135°52'14.80939"	136.20	2423725.45	2263794.26	126.26	SET FLUSH 2-1/2" ALUMINUM CAP, "DJ&A, P.C. CP1 GLBA 2023 CONTROL POINT"
CP-2	N58°27'16.19668"	W135°53'08.20278"	36.27	2425155.92	2260998.77	26.28	SET FLUSH 2-1/2" ALUMINUM CAP, DJ&A, P.C. CP2 GLBA 2023 CONTROL POINT"

SURVEY NOTES:

1) HORIZONTAL AND VERTICAL UNITS SHOWN HEREON ARE LISTED AS U.S. SURVEY FEET.

2) HORIZONTAL INFORMATION: COORDINATE VALUES AND DISTANCES SHOWN HEREON ARE STATE PLANE VALUES AND ARE IN REFERENCE TO U.S. STATE PLANE COORDINATE SYSTEM, ALASKA STATE PLANE ZONE 1 (5001), NORTH AMERICAN DATUM 1983 [NAD83(2011)].

3) VERTICAL INFORMATION: GNSS DERIVED ELEVATIONS WERE UTILIZED FOR ALL MAPPING POINTS ON THIS PROJECT AND IS IN REFERENCE TO NORTH AMERICAN VERTICAL DATUM OF 1988 (NAVD88) UTILIZING GEOID 12B.

4) THE BASIS OF BEARING FOR THIS PROJECT IS GRID NORTH OF ALASKA STATE PLANE ZONE 1 (5001).

5) FIELDWORK WAS PERFORMED BETWEEN: OCTOBER 18-27, 2023

EXISTING SITE PLAN AND CONTROL POINT MAP

DESIGNED: EA	SUB SHEET NO.	TITLE OF SHEET	DRAWING NO.
CADD EA	C0.2	EXISTING SITE PLAN AND CONTROL POINT MAP GLACIER BAY NATIONAL PARK AND PRESERVE	132 187563
TECH. REVIEW: BE			PMIS/PKG NO. 307989A
DATE: 03/07/2025			SHEET 3 OF 20

2025-03-05TYLER.FRANCISC:\DJA-PW\WORK\DJA-PROD\DMS07407

DEMOLITION NOTES

1. CUT AND CAP EXISTING PIPES BEING ABANDONED AT CONNECTION POINTS TO PROPOSED SYSTEM IN TRENCH WALLS.

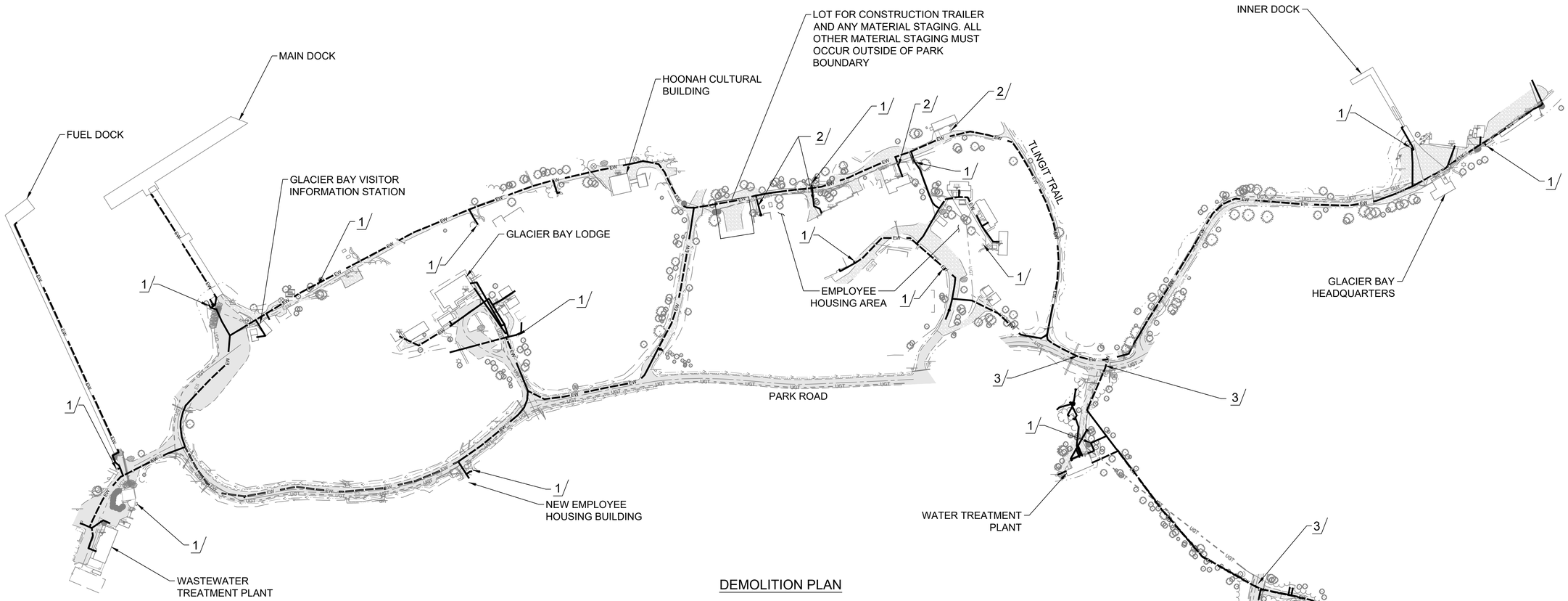

DEMOLITION PLAN

1/ FIRE HYDRANT SHED TO BE REMOVED, HYDRANT TO BE PROTECTED IN PLACE

2/ BUILDING WATER SERVICE VAULT TO BE REMOVED AND FILLED PER TOPSOIL PATCH ON DETAIL D/C2.3

3/ ASPHALT REMOVAL AND PATCHING ALONG PROPOSED WATER ALIGNMENT

DESIGNED: EA	SUB SHEET NO.	TITLE OF SHEET	DRAWING NO. 132
CADD EA	C0.3	DEMOLITION PLAN	187563
TECH. REVIEW: BE			PMIS/PKG NO. 307989A
DATE: 03/07/2025		GLACIER BAY NATIONAL PARK AND PRESERVE	SHEET 4 OF 20

2025-03-05TYLER.FRANCISC:\DJA-PWWORK\DJA-PROD\DMS07407

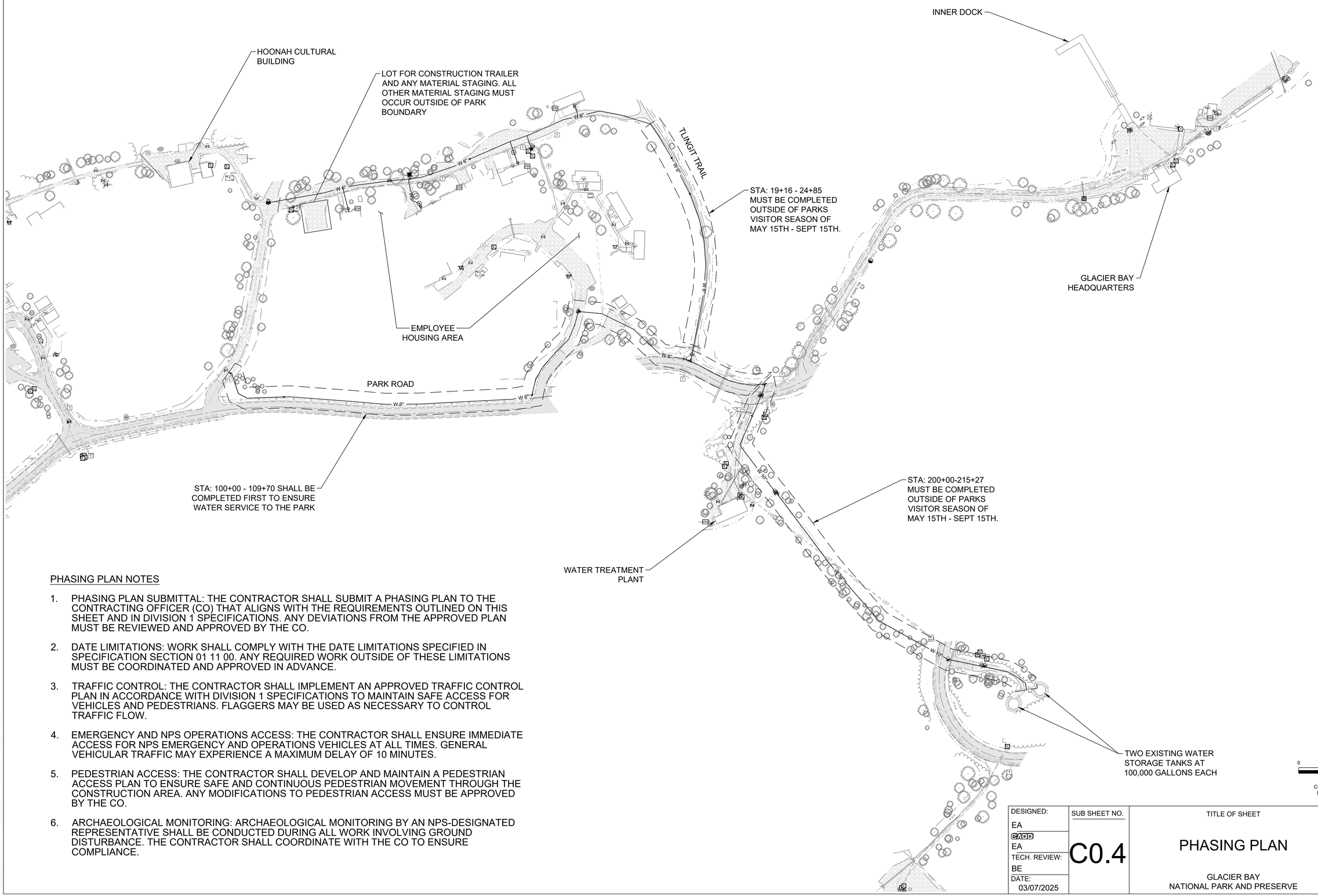

PHASING PLAN NOTES

1. PHASING PLAN SUBMITTAL: THE CONTRACTOR SHALL SUBMIT A PHASING PLAN TO THE CONTRACTING OFFICER (CO) THAT ALIGNS WITH THE REQUIREMENTS OUTLINED ON THIS SHEET AND IN DIVISION 1 SPECIFICATIONS. ANY DEVIATIONS FROM THE APPROVED PLAN MUST BE REVIEWED AND APPROVED BY THE CO.

2. DATE LIMITATIONS: WORK SHALL COMPLY WITH THE DATE LIMITATIONS SPECIFIED IN SPECIFICATION SECTION 01 11 00. ANY REQUIRED WORK OUTSIDE OF THESE LIMITATIONS MUST BE COORDINATED AND APPROVED IN ADVANCE.

3. TRAFFIC CONTROL: THE CONTRACTOR SHALL IMPLEMENT AN APPROVED TRAFFIC CONTROL PLAN IN ACCORDANCE WITH DIVISION 1 SPECIFICATIONS TO MAINTAIN SAFE ACCESS FOR VEHICLES AND PEDESTRIANS. FLAGGERS MAY BE USED AS NECESSARY TO CONTROL TRAFFIC FLOW.

4. EMERGENCY AND NPS OPERATIONS ACCESS: THE CONTRACTOR SHALL ENSURE IMMEDIATE ACCESS FOR NPS EMERGENCY AND OPERATIONS VEHICLES AT ALL TIMES. GENERAL VEHICULAR TRAFFIC MAY EXPERIENCE A MAXIMUM DELAY OF 10 MINUTES.

5. PEDESTRIAN ACCESS: THE CONTRACTOR SHALL DEVELOP AND MAINTAIN A PEDESTRIAN ACCESS PLAN TO ENSURE SAFE AND CONTINUOUS PEDESTRIAN MOVEMENT THROUGH THE CONSTRUCTION AREA. ANY MODIFICATIONS TO PEDESTRIAN ACCESS MUST BE APPROVED BY THE CO.

6. ARCHAEOLOGICAL MONITORING: ARCHAEOLOGICAL MONITORING BY AN NPS-DESIGNATED REPRESENTATIVE SHALL BE CONDUCTED DURING ALL WORK INVOLVING GROUND DISTURBANCE. THE CONTRACTOR SHALL COORDINATE WITH THE CO TO ENSURE COMPLIANCE.

DESIGNED: EA	SUB SHEET NO.	TITLE OF SHEET	DRAWING NO. 132
CADD EA	C0.4	PHASING PLAN	187563
TECH. REVIEW: BE			PMIS/PKG NO. 307989A
DATE: 03/07/2025		GLACIER BAY NATIONAL PARK AND PRESERVE	SHEET 5 OF 20

2025-03-05TYLER.FRANCISC:\DJA-PWWORK\DJA-PROD\DMS07407

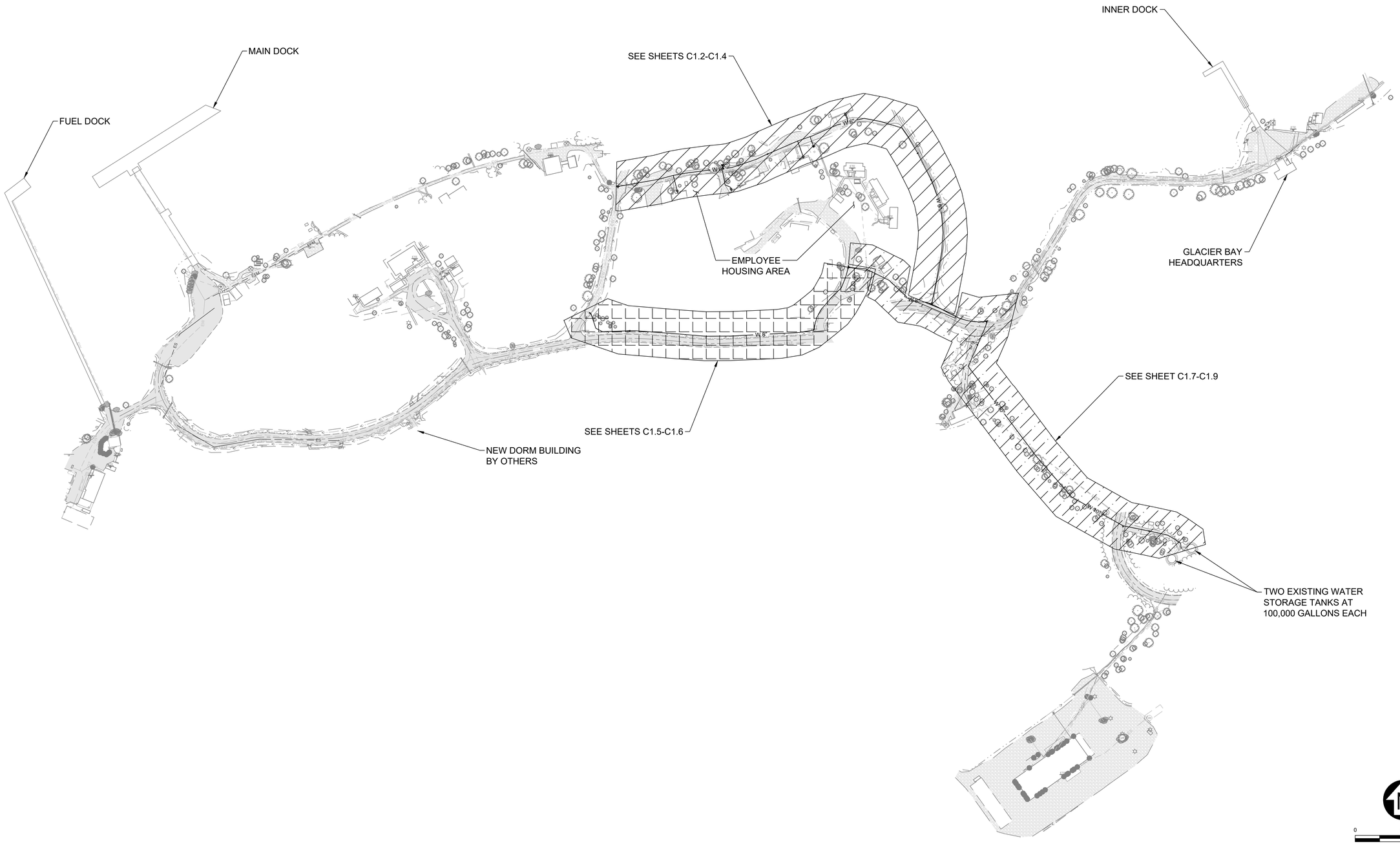

DESIGNED:	SUB SHEET NO.	TITLE OF SHEET	DRAWING NO.
EA	C1.0	WATER SYSTEM SHEET INDEX	132 / 187563
CADD: EA			PMIS/PKG NO. 307989A
TECH. REVIEW: BE		GLACIER BAY NATIONAL PARK AND PRESERVE	SHEET 6 OF 20
DATE: 03/07/2025			

2025-03-05TYLER.FRANCISC:\DJA-PWWORK\DJA-PROD\DMS07407

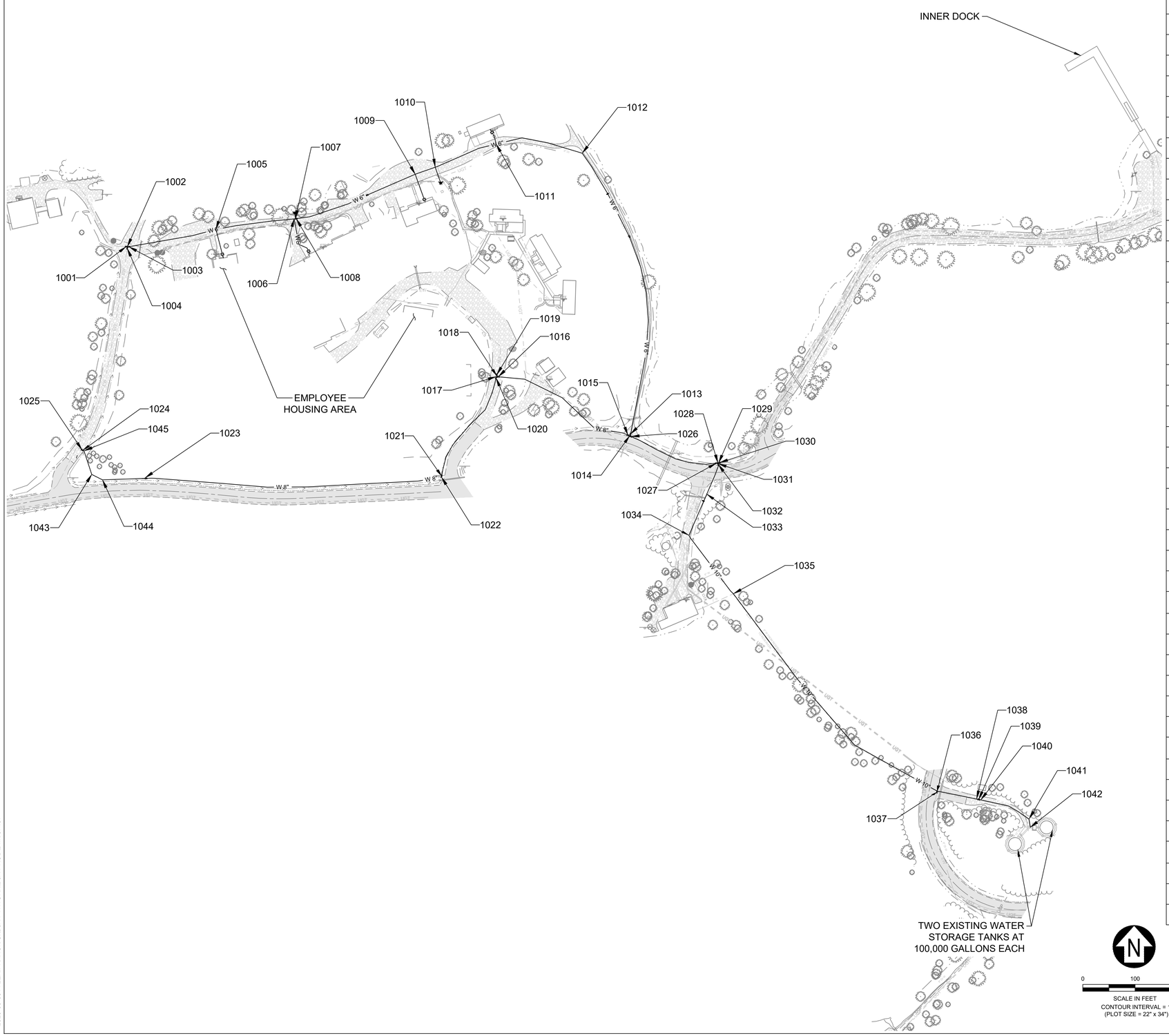

LAYOUT POINT TABLE

POINT #	NORTHING	EASTING	DESCRIPTION
1001	2425414.09	2262254.20	6" GATE VALVE, CONNECT TO EXISTING WATER MAIN
1002	2425414.09	2262256.71	6" X 6" X 6" HDPE TEE
1003	2425414.03	2262259.44	6" GATE VALVE
1004	2425411.13	2262256.42	6" GATE VALVE
1005	2425447.29	2262425.94	2" WATER SERVICE TO RESIDENCE
1006	2425467.24	2262575.47	2" WATER SERVICE TO RESIDENCE
1007	2425467.46	2262577.97	6" X 6" X 6" TEE TO FIRE HYDRANT
1008	2425467.63	2262579.56	AIR/VAC RELEASE VALVE
1009	2425552.52	2262806.99	2" WATER SERVICE TO RESIDENCE
1010	2425565.94	2262845.19	6" X 6" X 6" TEE TO FIRE HYDRANT
1011	2425610.18	2262961.63	2" WATER SERVICE TO RESIDENCE
1012	2425592.71	2263126.18	6" HDPE 45° BEND
1013	2425056.07	2263218.40	6" GATE VALVE
1014	2425052.61	2263216.86	6" X 8" X 8" HDPE TEE
1015	2425054.10	2263213.52	8" GATE VALVE
1016	2425165.58	2262965.87	8" GATE VALVE
1017	2425165.91	2262962.05	8" X 8" X 8" HDPE TEE
1018	2425167.93	2262962.41	8" X 6" HDPE REDUCER
1019	2425169.47	2262962.87	6" GATE VALVE
1020	2425163.20	2262961.43	8" GATE VALVE
1021	2424975.78	2262857.42	BLOWOFF VALVE
1022	2424973.76	2262857.19	8" HDPE 90° BEND
1023	2424972.54	2262290.79	AIR/VAC RELEASE VALVE
1024	2425025.08	2262171.63	8" GATE VALVE
1025	2425025.80	2262170.20	8" X 6" REDUCER CONNECT TO EXISTING 6" WATER MAIN
1026	2425051.47	2263219.43	8" GATE VALVE
1027	2425000.47	2263382.57	8" GATE VALVE
1028	2425000.80	2263385.59	8" X 8" X 8" HDPE TEE
1029	2425001.08	2263386.96	8" X 6" HDPE REDUCER
1030	2425001.39	2263388.53	6" GATE VALVE, CONNECT TO EXISTING 6" WATER MAIN
1031	2424999.83	2263385.79	10" X 8" HDPE REDUCER
1032	2424998.26	2263386.11	10" GATE VALVE
1033	2424941.39	2263364.28	BLOWOFF VALVE
1034	2424862.64	2263330.10	10" HDPE 45° BEND
1035	2424750.92	2263415.16	2" WATER SERICE CONNECTION TO WATER TREATMENT PLANT
1036	2424373.94	2263804.62	8" X 10" X 10" HDPE TEE
1037	2424371.99	2263804.17	8" GATE VALVE, CONNECT TO EXISTING 8" DI WATER MAIN
1038	2424358.77	2263880.05	6" X 10" X 10" HDPE TEE
1039	2424357.94	2263884.16	10" GATE VALVE
1040	2424357.08	2263888.10	6" X 10" X 10" HDPE TEE
1041	2424320.43	2263980.28	10" HDPE 45° BEND
1042	2424304.63	2263982.78	10" X 10" X 10" HDPE TEE, CONNECT TO EXISTING
1043	2424978.97	2262188.56	8" HDPE 45° BEND
1044	2424968.56	2262209.13	8" HDPE 22.5° BEND
1045	2425024.01	2262173.78	8" HDPE 45° BEND

N

0 100 200

SCALE IN FEET
CONTOUR INTERVAL = 1'
(PLOT SIZE = 22" x 34")

DESIGNED: EA
CADD: EA
TECH. REVIEW: BE
DATE: 03/07/2025

SUB SHEET NO.
C1.1

TITLE OF SHEET
WATER SYSTEM
LAYOUT POINTS

GLACIER BAY
NATIONAL PARK AND PRESERVE

DRAWING NO. 132
187563
PMIS/PKG NO. 307989A
SHEET 7 OF 20

2025-03-05TYLER.FRANCISC:\DJA-PWWORK\DJA-PROD\DMS07407

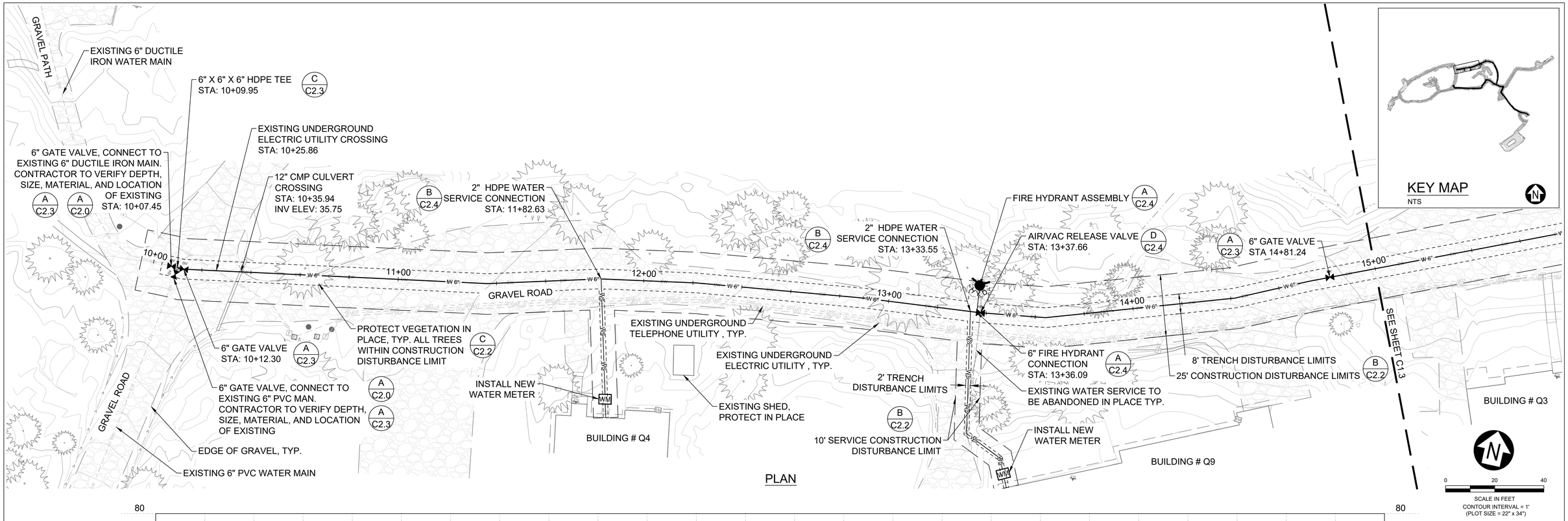

PLAN

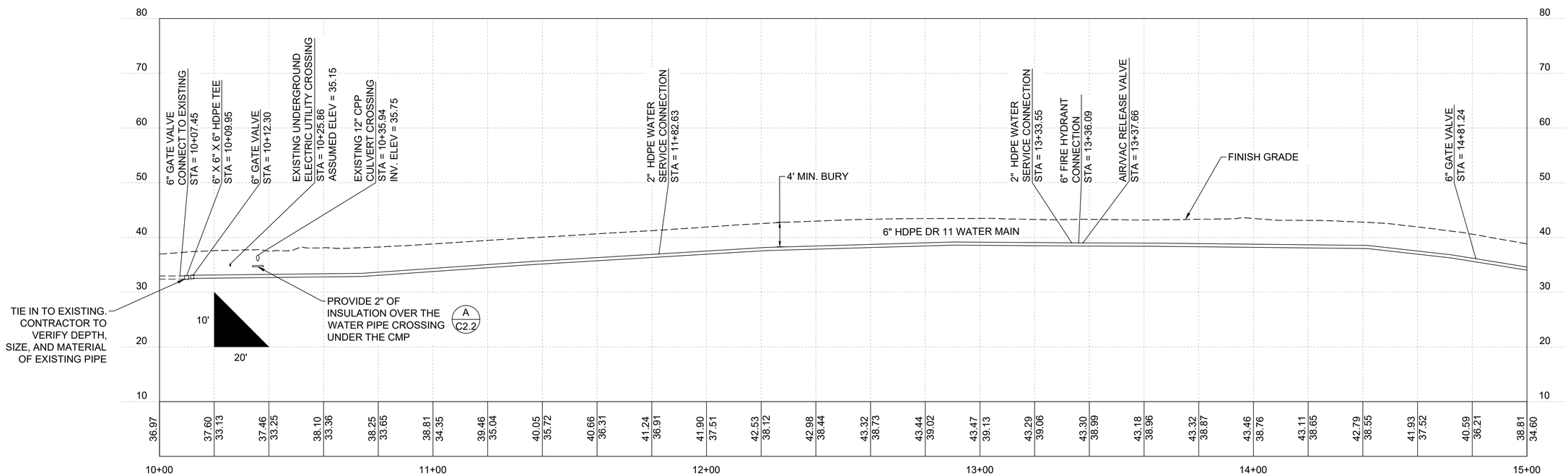

PROFILE

DESIGNED: EA, TF	SUB SHEET NO.	TITLE OF SHEET	DRAWING NO.
CADD EA, TF	C1.2	WATER DISTRIBUTION PLAN AND PROFILE STA 10+00 TO 15+00	132 / 187563
TECH. REVIEW: BE		GLACIER BAY NATIONAL PARK AND PRESERVE	PMIS/PKG NO. 307989A
DATE: 03/07/2025			SHEET 8 OF 20

8/27/24 15:12 TYLER.FRANCIS C:\DJA-PW\WORK\DJA-PROD\DMS0740703_TLINGIT TRAIL.DWG

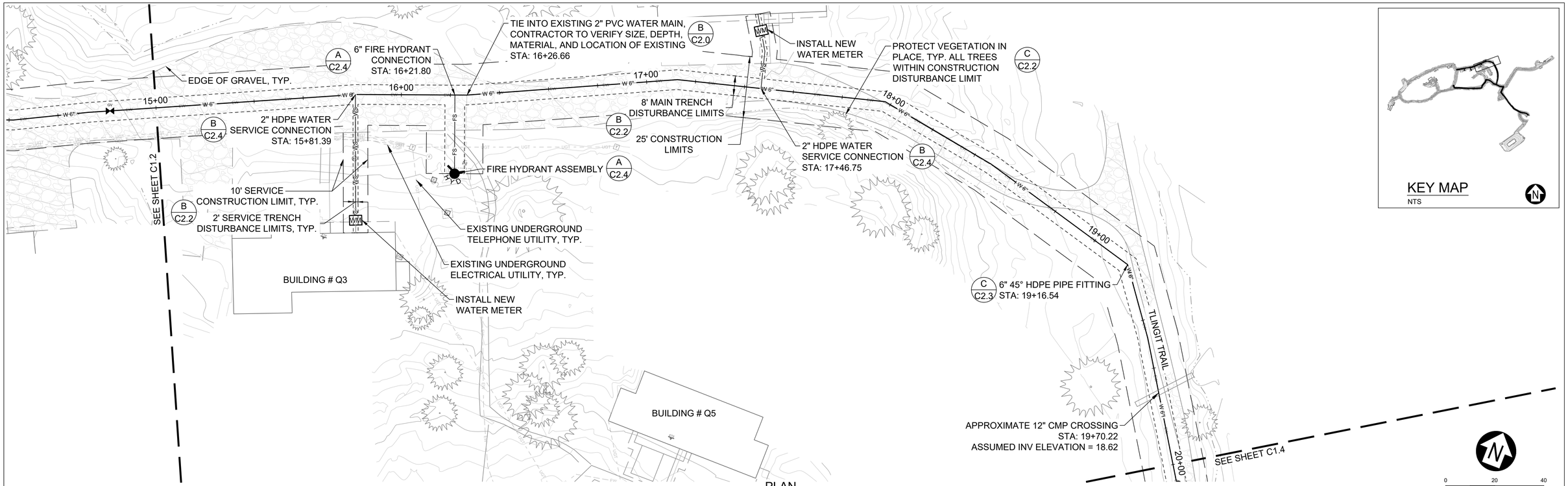

PLAN

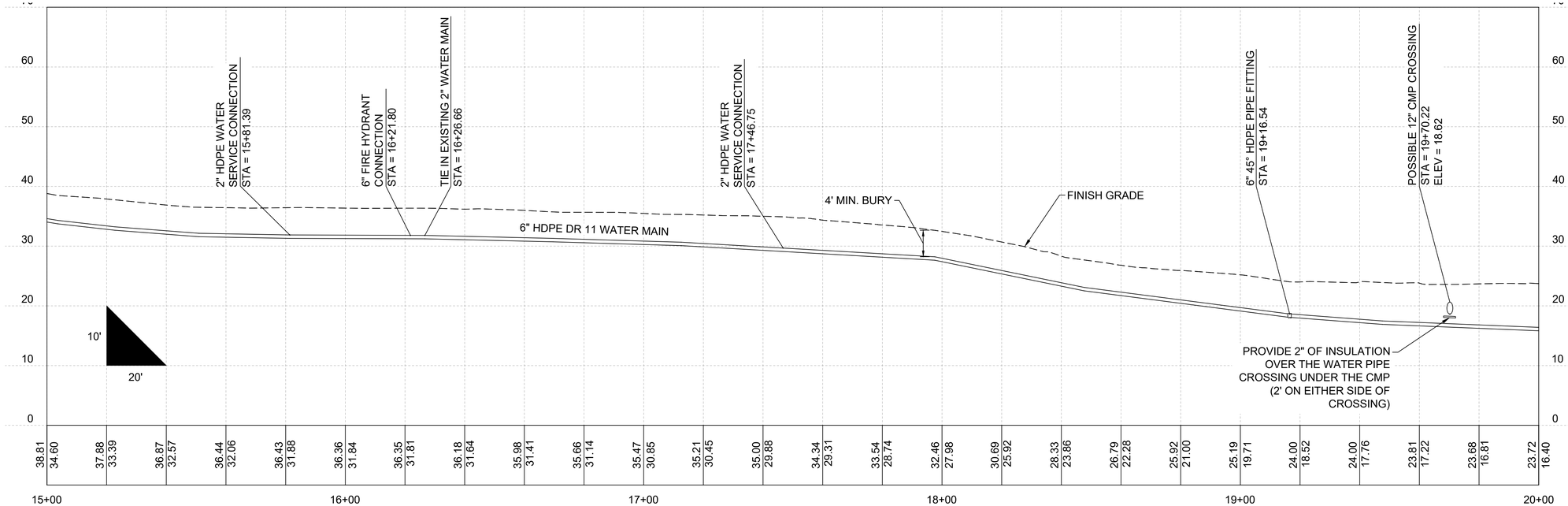

PROFILE

DESIGNED: EA, TF	SUB SHEET NO.	TITLE OF SHEET	DRAWING NO.
CADD EA, TF	C1.3	WATER DISTRIBUTION PLAN AND PROFILE STA 15+00 TO 20+00	132 / 187563
TECH. REVIEW: BE		GLACIER BAY NATIONAL PARK AND PRESERVE	PMIS/PKG NO. 307989A
DATE: 03/07/2025			SHEET 9 OF 20

8/27/24 15:12 TYLER.FRANCIS C:\DJA-PWWORK\DJA-PROD\DMS07407\03_TLINGIT TRAIL.DWG

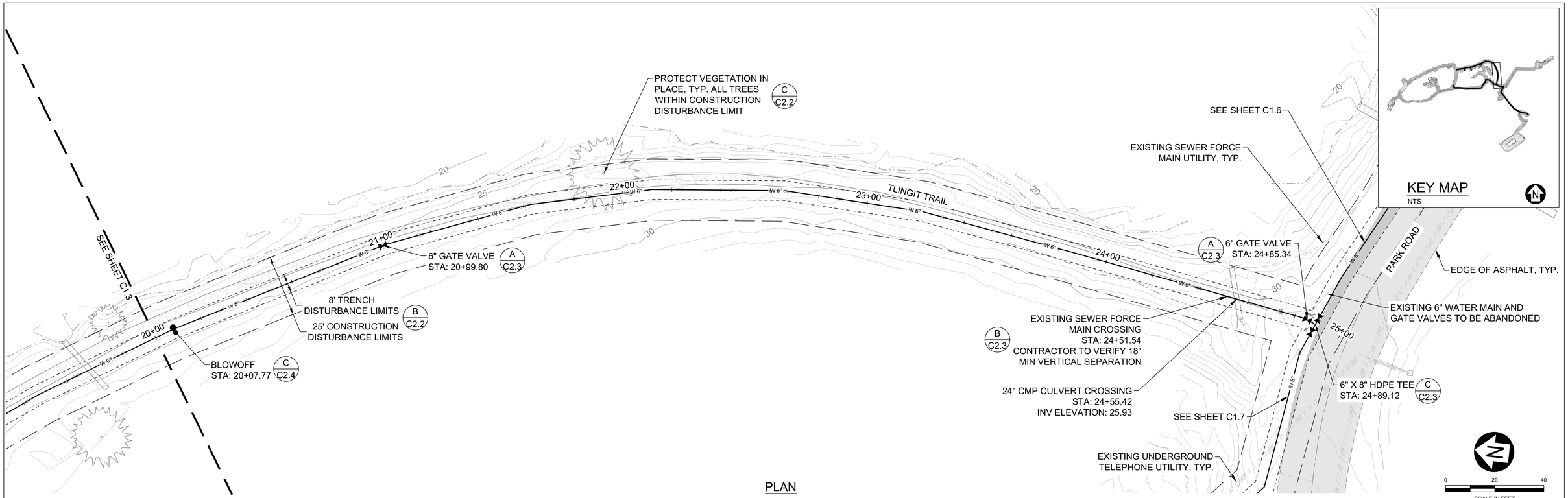

PLAN

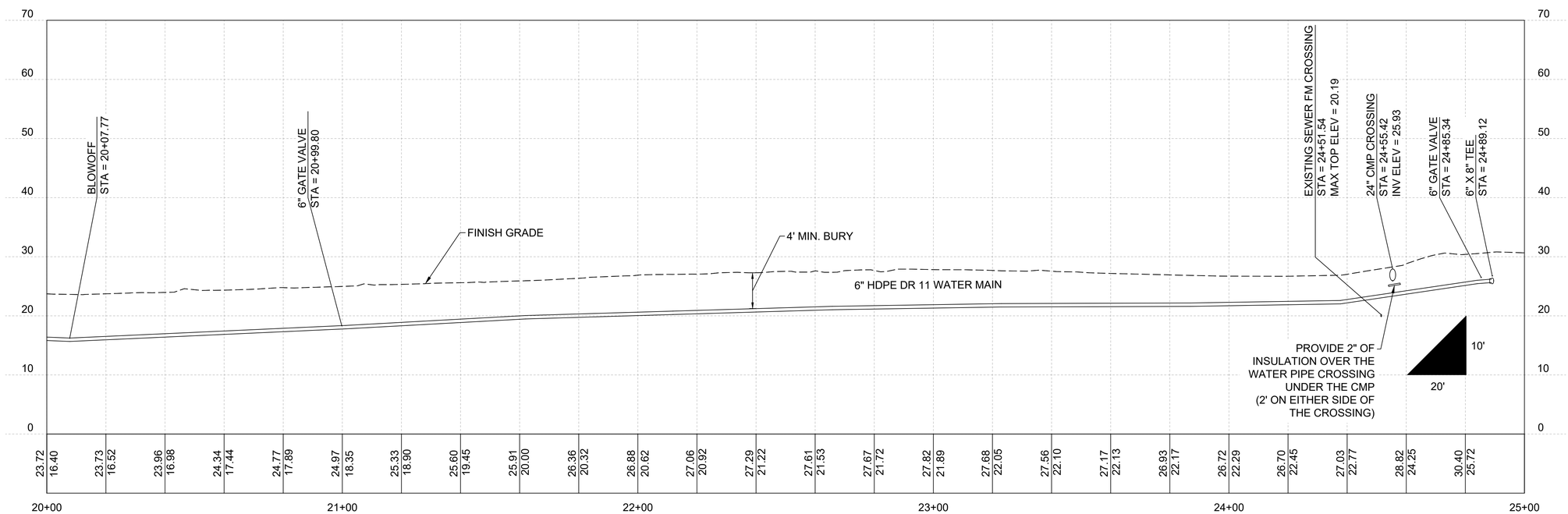

PROFILE

DESIGNED: EA, TF	SUB SHEET NO.	TITLE OF SHEET	DRAWING NO.
CADD: EA, TF	C1.4	WATER DISTRIBUTION PLAN AND PROFILE STA 20+00 TO 25+00	132 / 187563
TECH. REVIEW: BE		GLACIER BAY NATIONAL PARK AND PRESERVE	PMIS/PKG NO. 307989A
DATE: 03/07/2025			SHEET 10 OF 20

8/27/24 15:12 TYLER.FRANCIS C:\DJA-PW\WORK\DJA-PROD\DMS07407\03_TLINGIT TRAIL.DWG

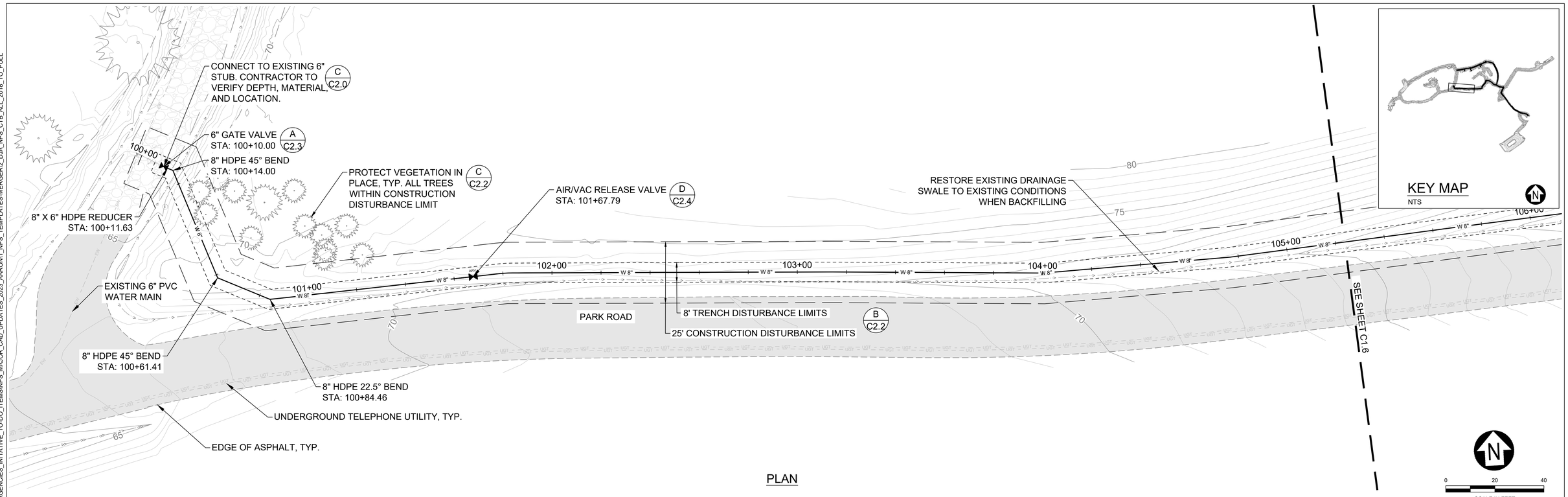

PLAN

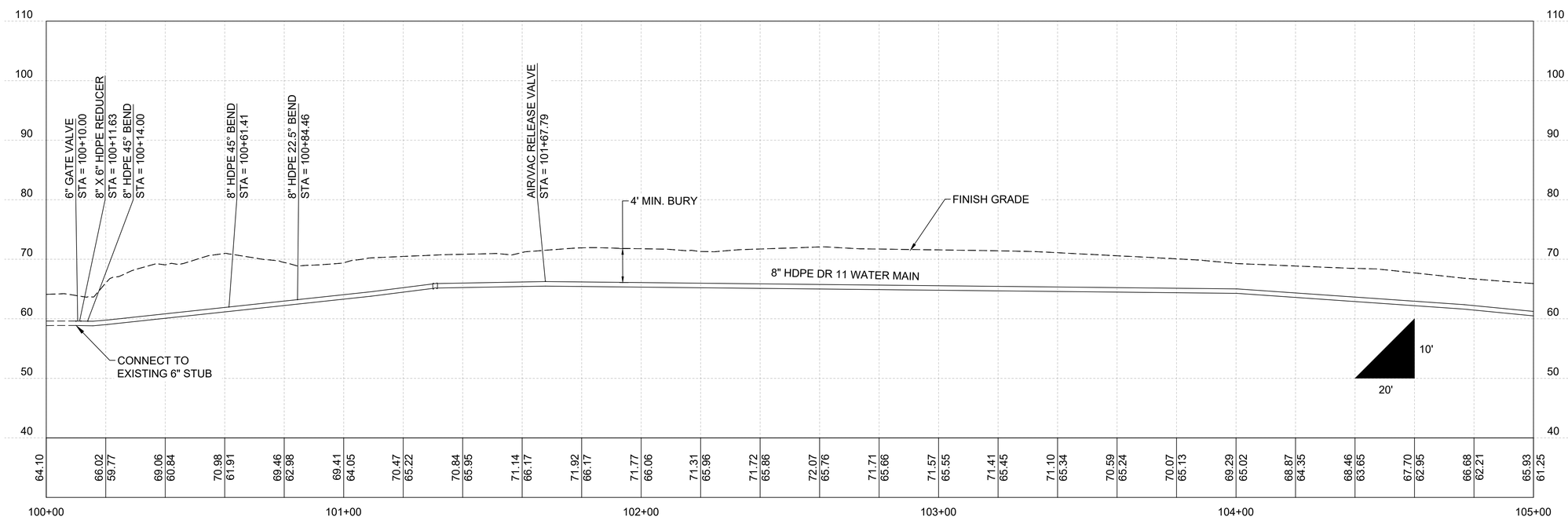

PROFILE

DESIGNED: EA, TF	SUB SHEET NO.	TITLE OF SHEET	DRAWING NO.
CADD EA, TF	C1.5	WATER DISTRIBUTION PLAN AND PROFILE STA 100+00 TO 105+00	132 / 187563
TECH. REVIEW: BE		GLACIER BAY NATIONAL PARK AND PRESERVE	PMIS/PKG NO. 307989A
DATE: 03/07/2025			SHEET 11 OF 20

8/29/24 15:12 TYLER.FRANCIS R22 C:\USERS\AARONDJ&A_PCID\J&A CAD USER GROUP - GENERAL\INITIATIVE#6_OTHERAGENCIES_MERGE_WITH_DJA_STANDARDS\11_OTHERAGENCIES_INITATIVE_TO-DO_ITEMS\NPS_MAJOR_CAD_UPDATES_2023_AARON\1_NPS_TEMPLATES-MERGER\2_DJA_NPS_CTB_ALL_2018_TO_PULL

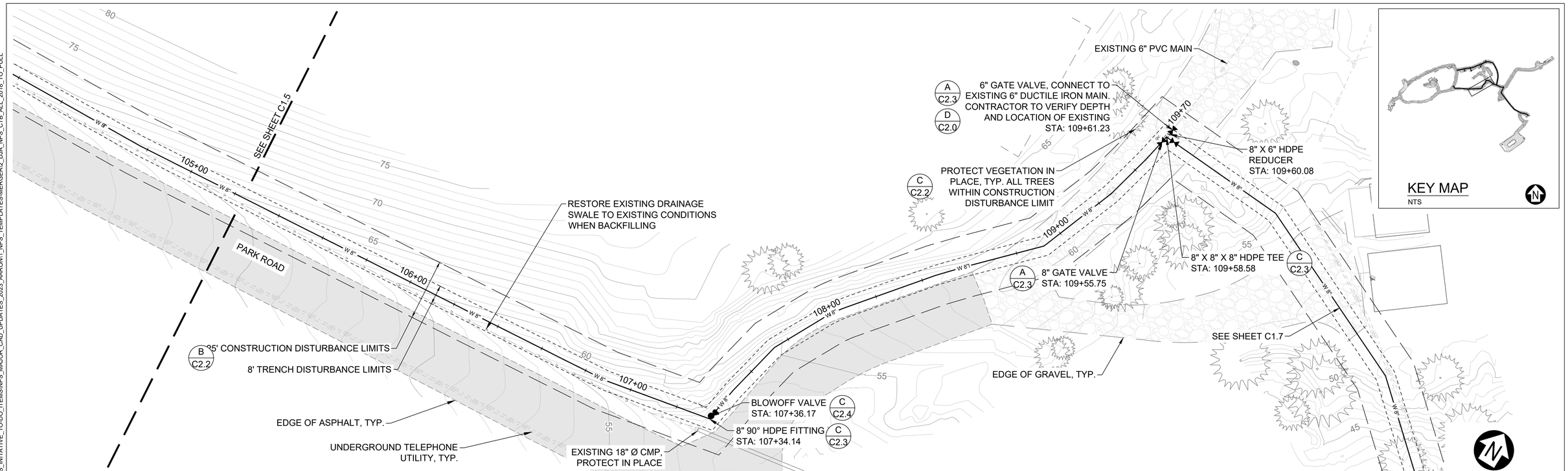

PLAN

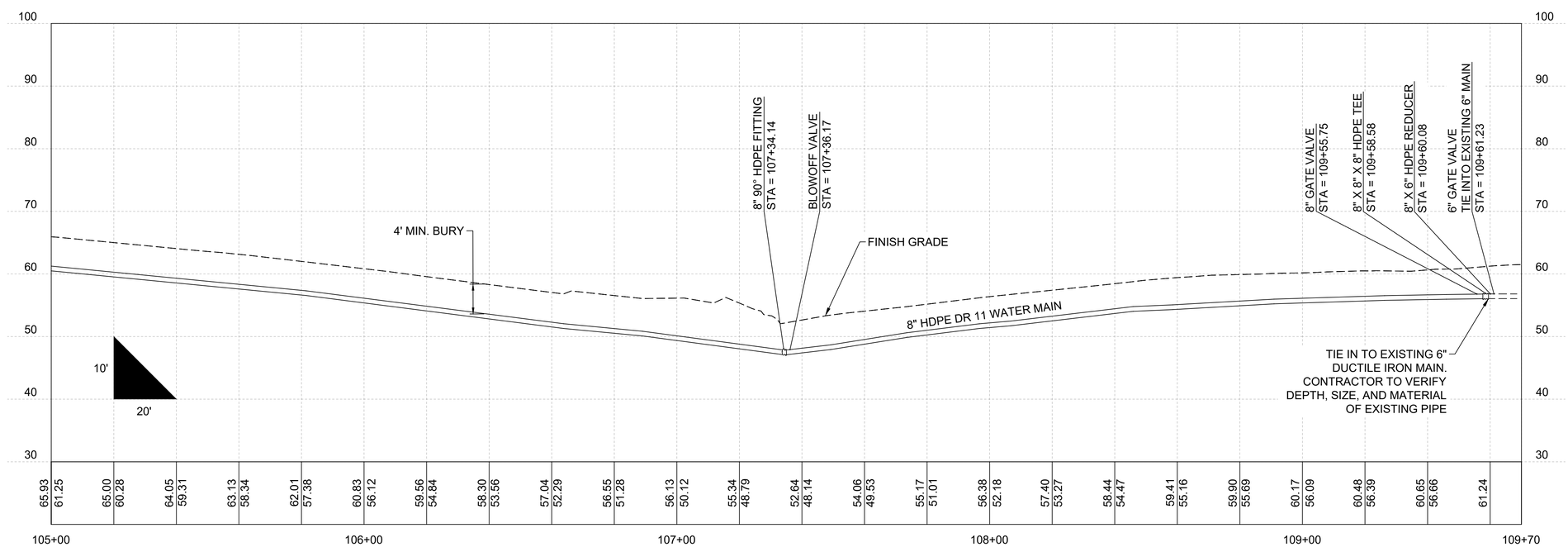

PROFILE

DESIGNED: EA, TF	SUB SHEET NO.	TITLE OF SHEET	DRAWING NO.
CADD EA, TF	C1.6	WATER DISTRIBUTION PLAN AND PROFILE STA 105+00 TO 109+70	132 / 187563
TECH. REVIEW: BE		GLACIER BAY NATIONAL PARK AND PRESERVE	PMIS/PKG NO. 307989A
DATE: 03/07/2025			SHEET 12 OF 20

8/29/24 15:12 TYLER.FRANCIS R22 C:\USERS\AARONDJ&A, PCID\J&A CAD USER GROUP - GENERAL\INTIATIVE#6_OTHERAGENCIES_MERGE_WITH_DJA_STANDARDS\11_OTHERAGENCIES_INITATIVE_TO-DO_ITEMS\NPS_MAJOR_CAD_UPDATES_2023_AARON\1_NPS_TEMPLATES-MERGER2_DJA_NPS_CTB_ALL_2018_TO_PULL

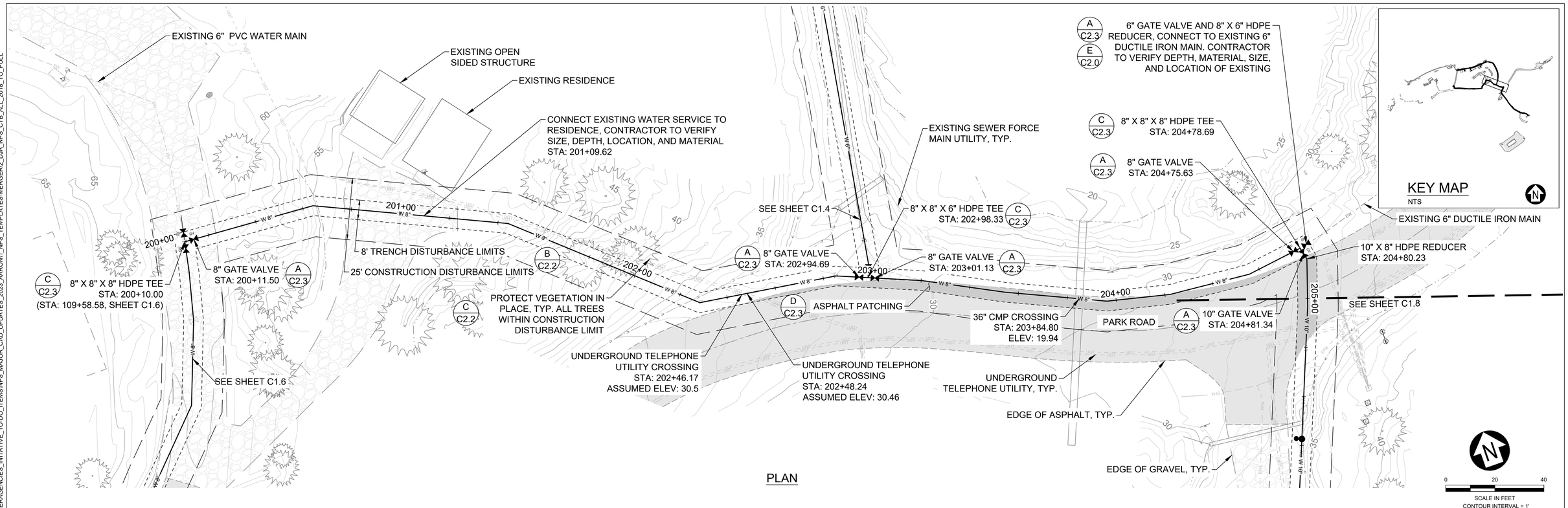

PLAN

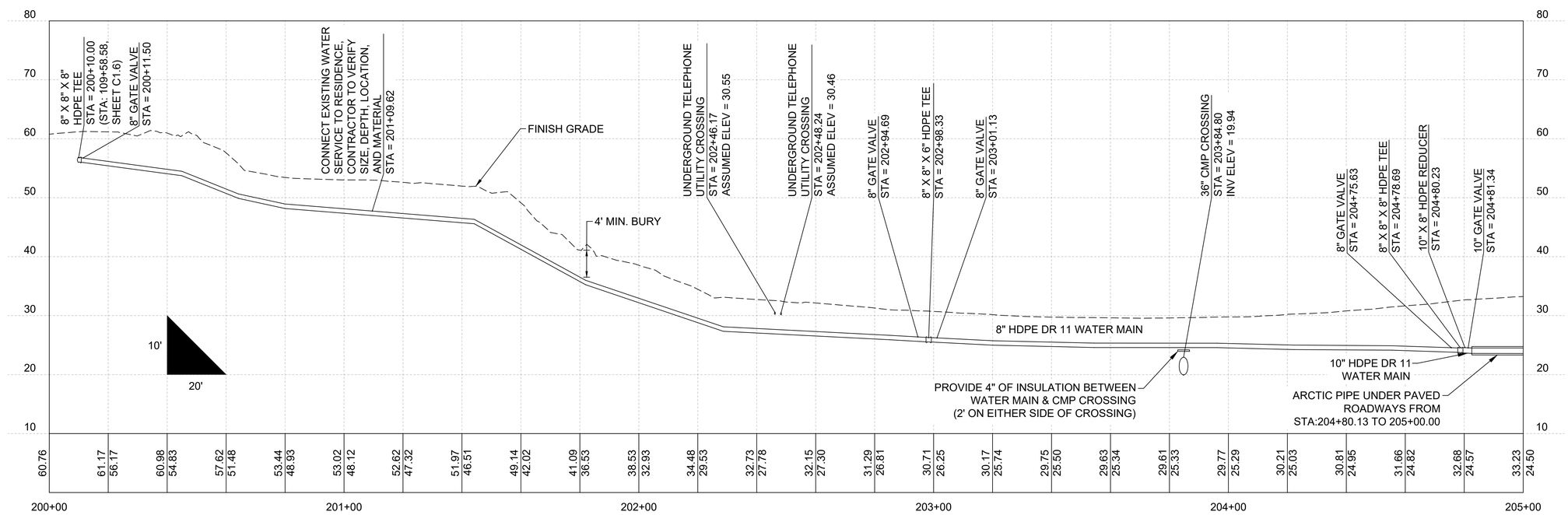

PROFILE

DESIGNED: EA, TF	SUB SHEET NO.	TITLE OF SHEET	DRAWING NO.
CADD EA, TF	C1.7	WATER DISTRIBUTION PLAN AND PROFILE STA 200+00 TO 205+00	132 / 187563
TECH. REVIEW: BE		GLACIER BAY NATIONAL PARK AND PRESERVE	PMIS/PKG NO. 307989A
DATE: 03/07/2025			SHEET 13 OF 20

8/29/24 08:01 TYLER.FRANCIS R22 C:\USERS\ARONJ\A&A_PCID\A&A CAD USER GROUP - GENERAL\INTIATIVE#6_OTHERAGENCIES_MERGE_WITH_DJA_STANDARDS\11_OTHERAGENCIES_INITATIVE_TO-DO_ITEMS\NPS_MAJOR_CAD_UPDATES_2023_AARON\1_NPS_TEMPLATES-MERGER2_DJA_NPS_CTB_ALL_2018_TO_PULL

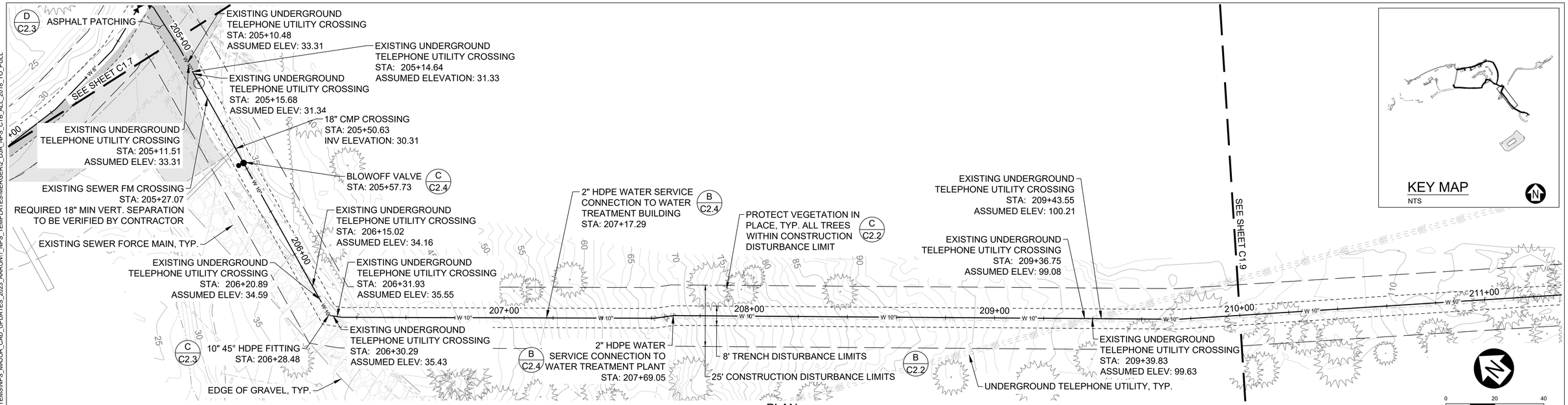

PLAN

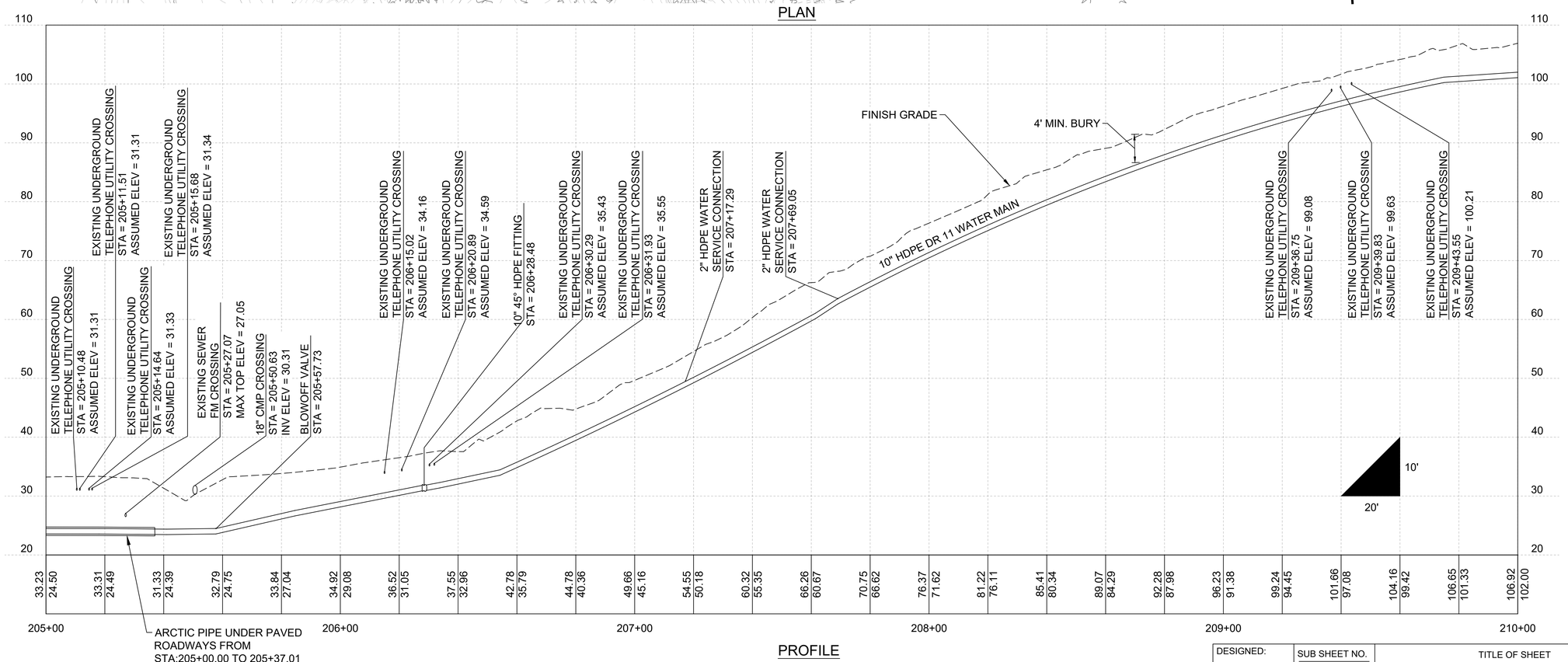

PROFILE

DESIGNED: EA, TF	SUB SHEET NO.	TITLE OF SHEET	DRAWING NO.
CADD EA, TF	C1.8	WATER DISTRIBUTION PLAN AND PROFILE STA 205+00 TO 210+00	132 / 187563
TECH. REVIEW: BE		GLACIER BAY NATIONAL PARK AND PRESERVE	PMIS/PKG NO. 307989A
DATE: 03/07/2025			SHEET 14 OF 20

8/29/24 08:01 TYLER.FRANCIS R22 C:\USERS\AARON\DJ&A, PC\DJ&A CAD USER GROUP - GENERAL\INITIATIVE#6_OTHERAGENCIES_MERGE_WITH_DJA_STANDARDS\1.1_OTHERAGENCIES_INITATIVE_TO-DO_ITEMS\NPS_MAJOR_CAD_UPDATES_2023_AARON\1_NPS_TEMPLATES-MERGER2_DJA_NPS_CTB_ALL_2018_TO_PULL

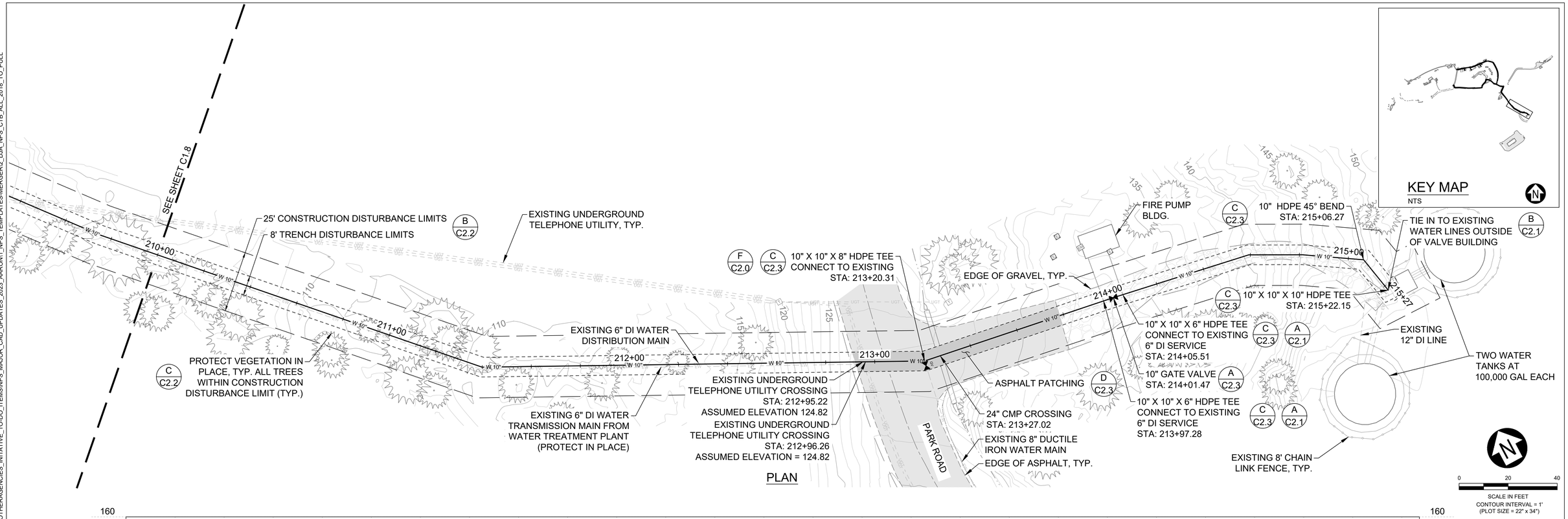

PLAN

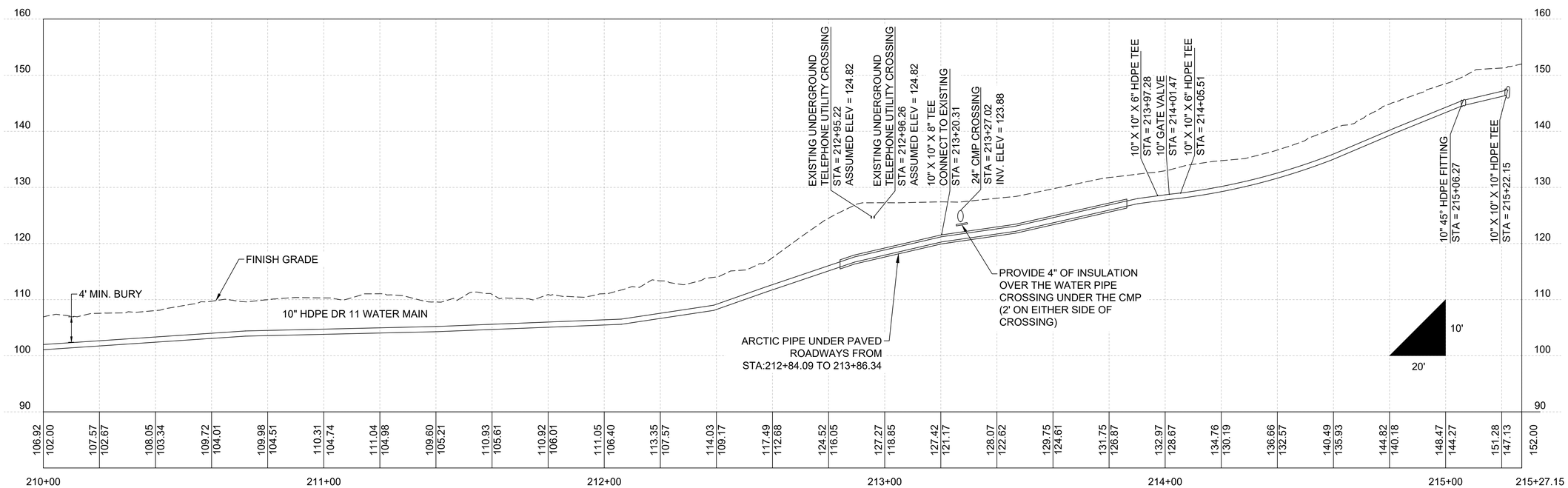

PROFILE

DESIGNED: EA, TF	SUB SHEET NO.	TITLE OF SHEET	DRAWING NO.
CADD EA, TF	C1.9	WATER DISTRIBUTION PLAN AND PROFILE STA 210+00 TO 215+27	132 / 187563
TECH. REVIEW: BE		GLACIER BAY NATIONAL PARK AND PRESERVE	PMIS/PKG NO. 307989A
DATE: 03/07/2025			SHEET 15 OF 20

8/29/24 08:01 TYLER.FRANCIS R22 C:\USERS\AARONI\D&A, PC\D,&A CAD USER GROUP - GENERAL\INTIATIVE#8_OTHERAGENCIES_MERGE_WITH_DJA_STANDARDS\1.1_OTHERAGENCIES_INITATIVE_TO-DO_ITEMS\NPS_MAJOR_CAD_UPDATES_2023_AARONI\1_NPS_TEMPLATES-MERGER2_DJA_NPS_CTB_ALL_2018_TO_PULL

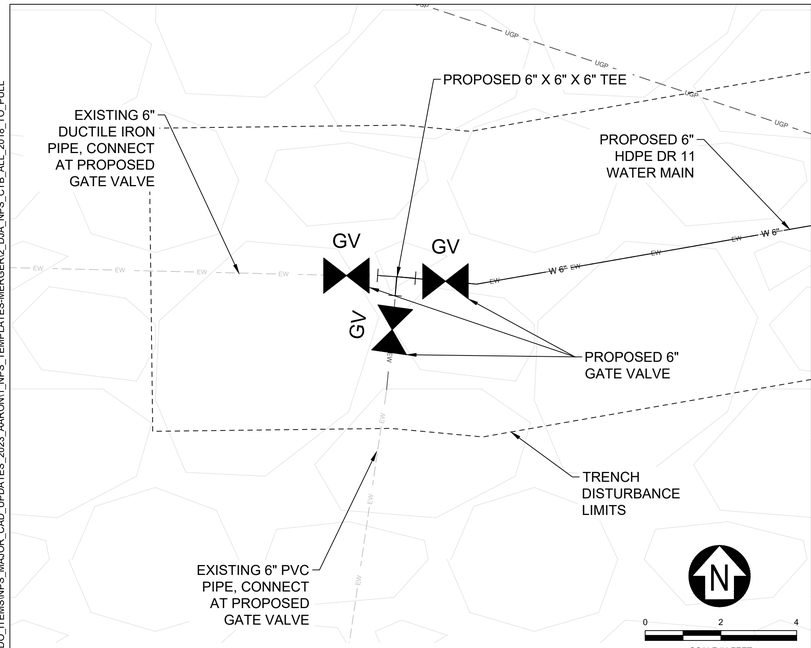

A / C2.0 TLINGIT TRAIL CONNECTION AT STA: 10+09.95
SEE SHEET C1.2

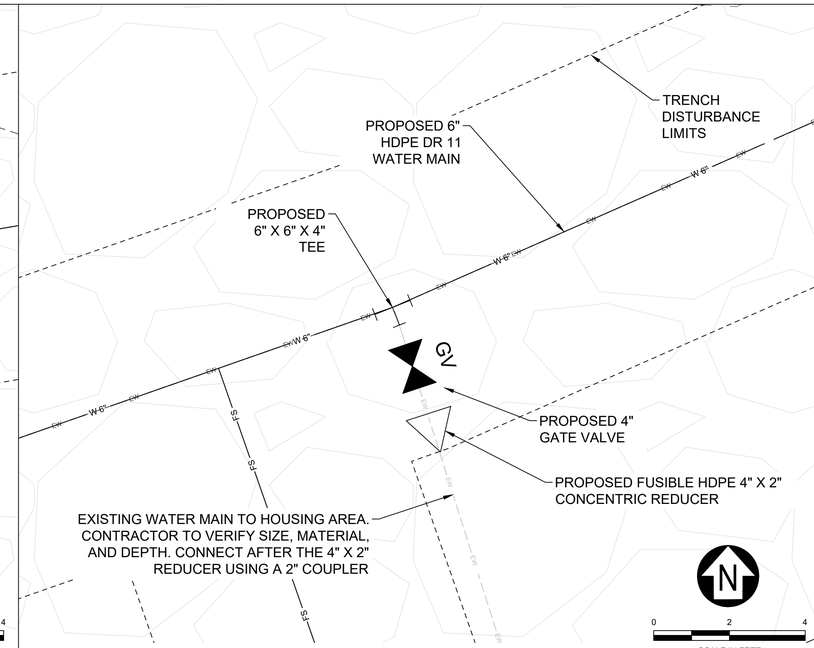

B / C2.0 HOUSING AREA CONNECTION AT STA: 16+26.66
SEE SHEET C1.3

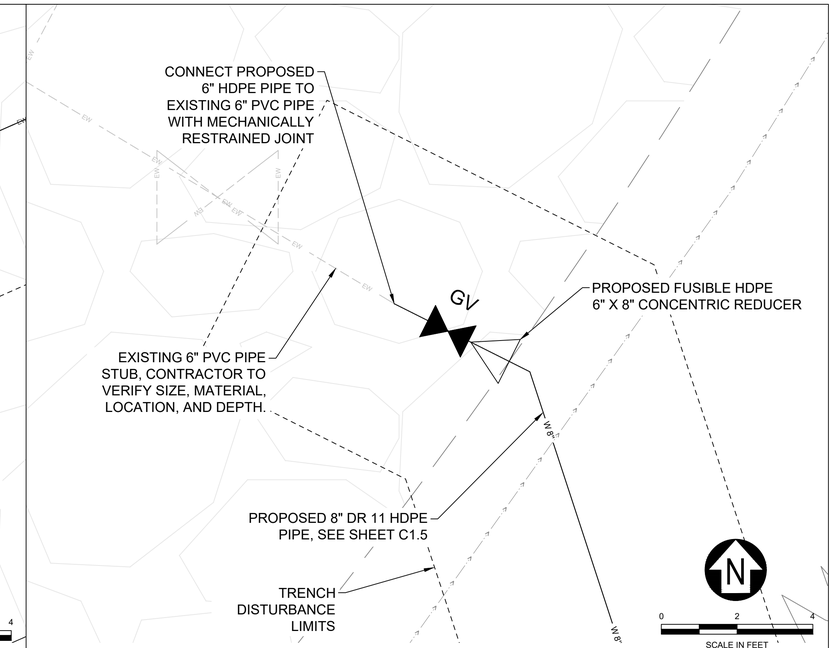

C / C2.0 PARK ROAD CONNECTION AT STA: 100+00
SEE SHEET C1.5

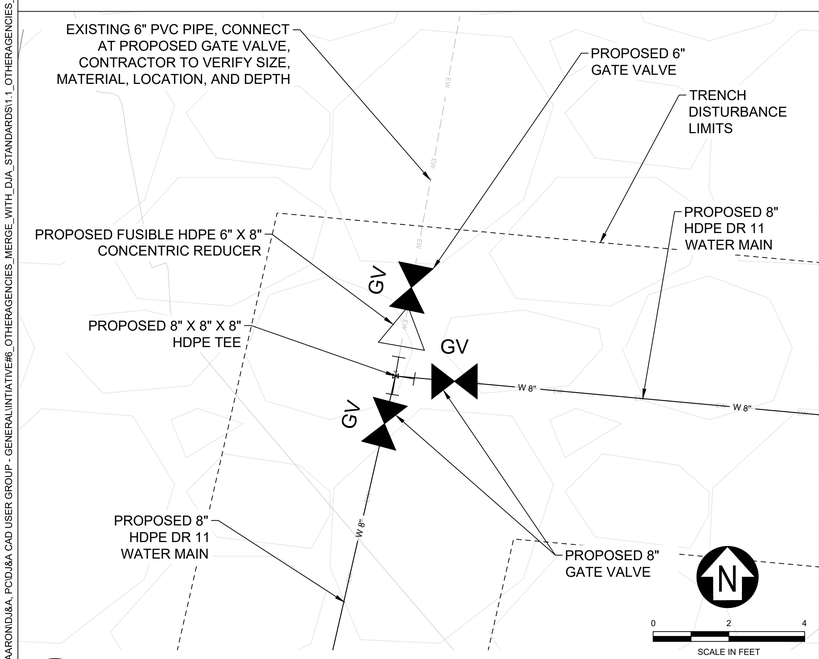

D / C2.0 PARK ROAD CONNECTION AT STA: 109+58.58
SEE SHEET C1.6

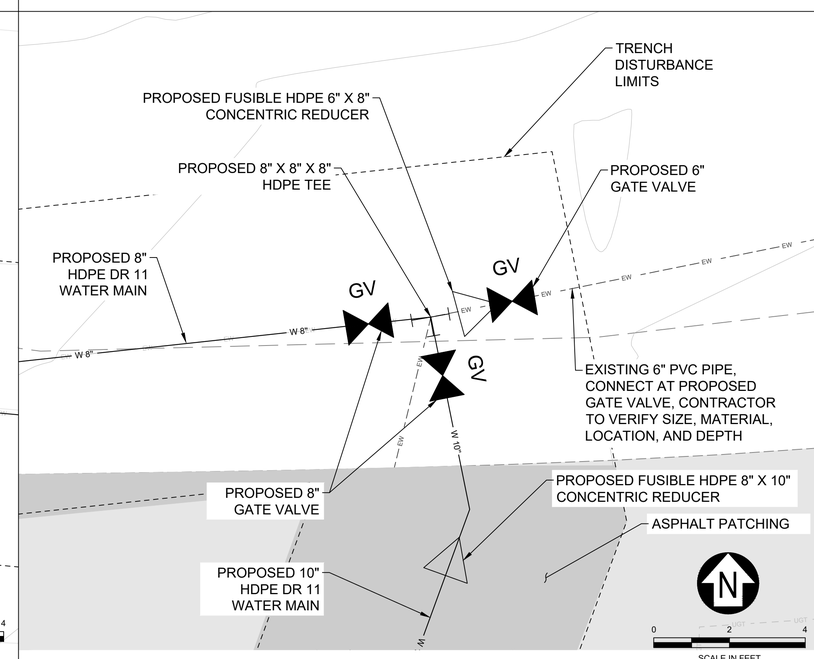

E / C2.0 PARK ROAD TO TANK CONNECTION AT STA: 204+78.69
SEE SHEET C1.7

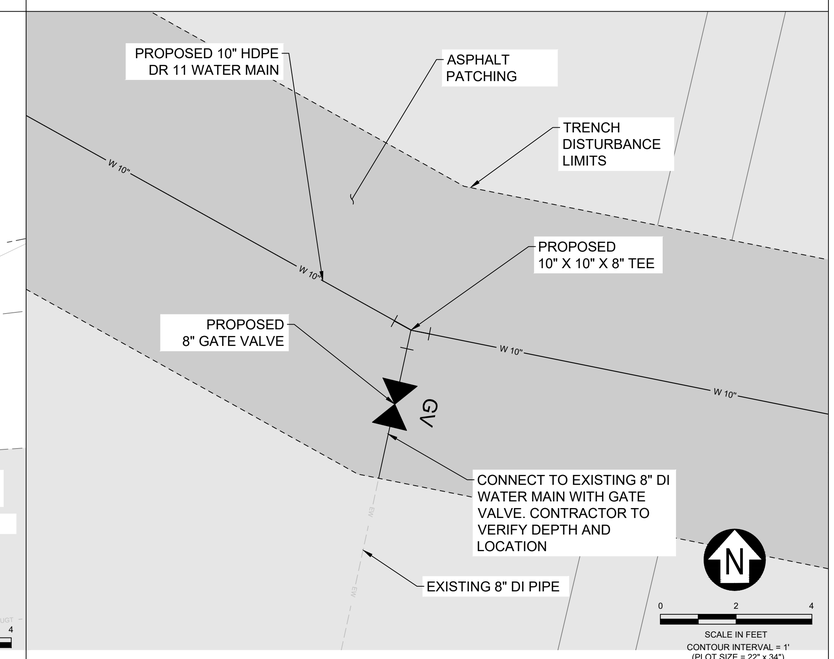

F / C2.0 CONNECTION TO NPS MAINTENANCE BUILDING AT STA: 213+20.31
SEE SHEET C1.9

DESIGNED: EA, TF CADD: EA, TF TECH. REVIEW: BE DATE: 03/07/2025	SUB SHEET NO. C2.0	TITLE OF SHEET WATER SYSTEM CONNECTION DETAILS 1 GLACIER BAY NATIONAL PARK AND PRESERVE	DRAWING NO. 132 / 187563 PMIS/PKG NO. 307989A SHEET 16 OF 20

8/29/24 09:41 TYLER.FRANCIS R22 C:\USERS\AARONJD\&A_PCID\J&A CAD USER GROUP - GENERAL\INITIATIVE#6_OTHERAGENCIES_MERGE_WITH_DJA_STANDARDS\1-1_OTHERAGENCIES_INITATIVE_TO-DO_ITEMS\NPS_MAJOR_CAD_UPDATES_2023_AARON\1_NPS_TEMPLATES-MERGER2_DJA_NPS_CTB_ALL_2018_TO_PULL

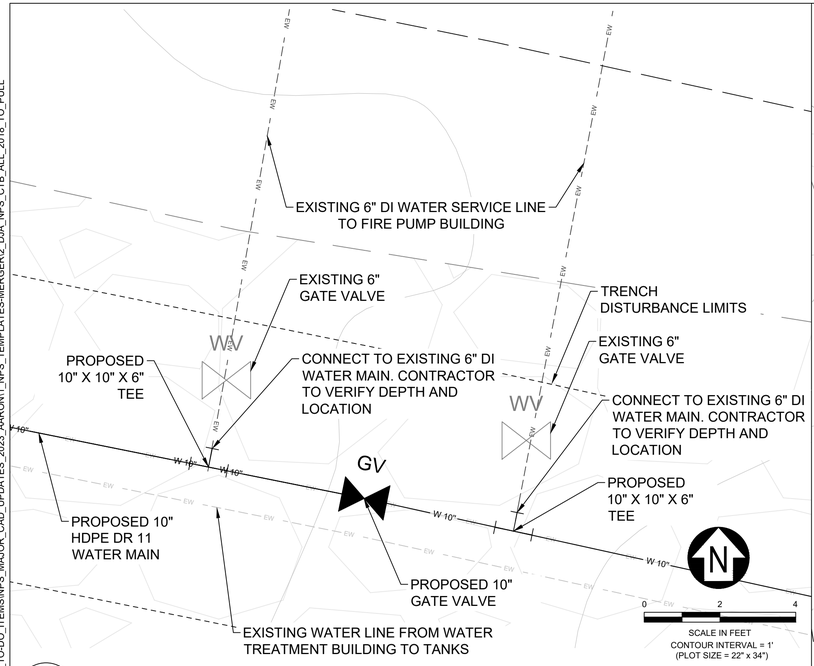

A C2.1 FIRE PUMP BUILDING CONNECTIONS AT STA: 213+97.28 AND 214+05.51

SEE SHEET C1.9

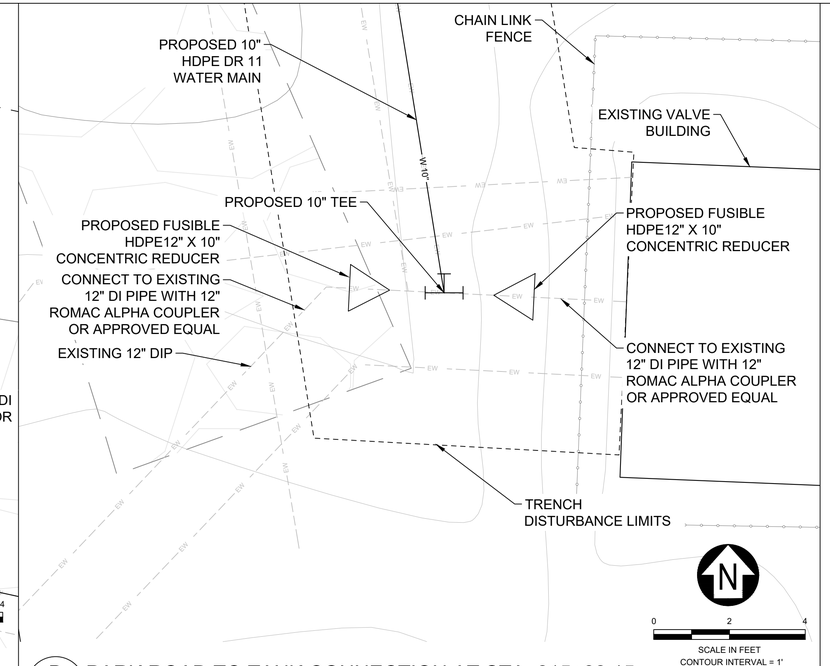

B C2.1 PARK ROAD TO TANK CONNECTION AT STA: 215+22.15

SEE SHEET C1.9

DESIGNED: EA, TF	SUB SHEET NO.	TITLE OF SHEET	DRAWING NO.
CADD EA, TF	C2.1	WATER SYSTEM CONNECTION DETAILS 2	132 / 187563
TECH. REVIEW: BE			PMIS/PKG NO. 307989A
DATE: 03/07/2025		GLACIER BAY NATIONAL PARK AND PRESERVE	SHEET 17 OF 20

8/29/24 09:41 TYLER.FRANCIS R22 C:\USERS\AARON\D,&A, PC\D,&A CAD USER GROUP - GENERAL\INTIATIVE#5_OTHERAGENCIES_MERGE_WITH_DJA_STANDARDS\1.1_OTHERAGENCIES_INITATIVE_TO-DO_ITEMS\NPS_MAJOR_CAD_UPDATES_2023_AARON\1_NPS_TEMPLATES-MERGER\2_DJA_NPS_CTB_ALL_2018_TO_PULL

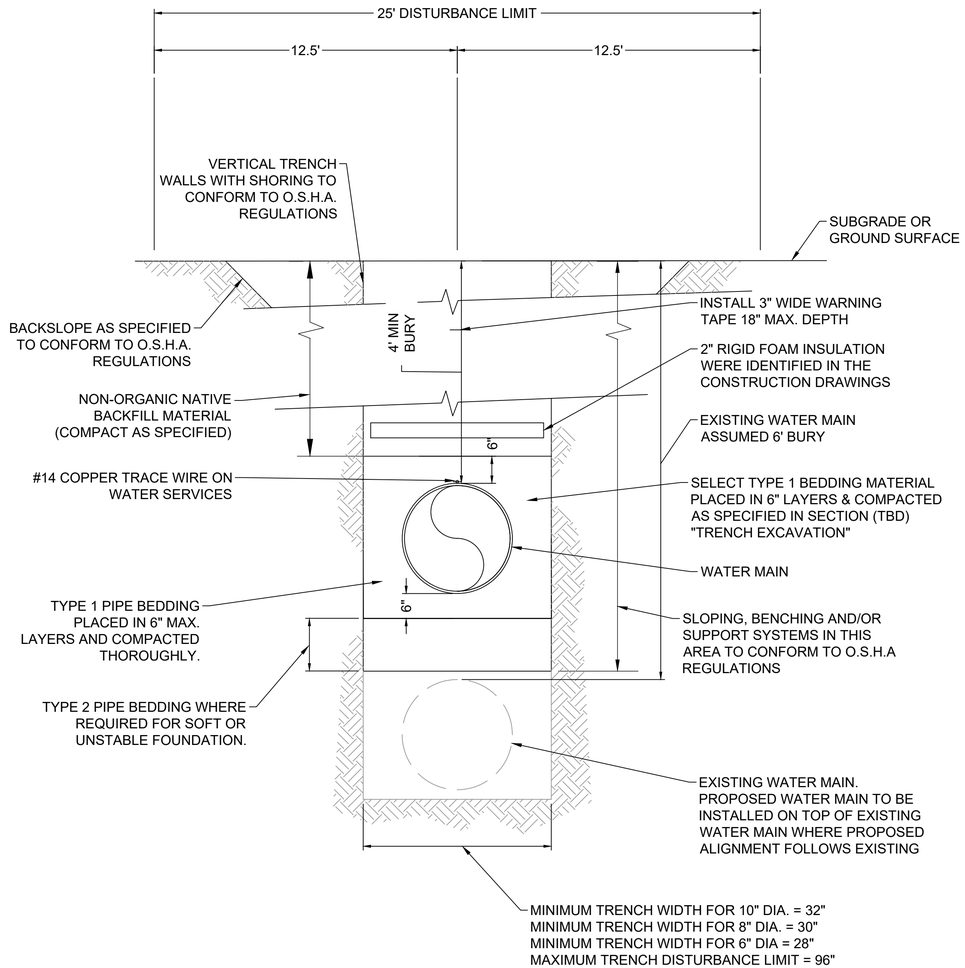

WATER TRENCH DETAIL NOTES:

1. WHERE TRENCH PASSES THROUGH EXISTING PAVEMENT THE PAVEMENT SHALL BE CUT ALONG A NEAT VERTICAL LINE A MINIMUM OF 12" FROM THE EDGE OF THE TRENCH OPENING. WHERE NEAT LINE IS LESS THAN 3' FROM EDGE OF EXISTING PAVEMENT OR CURB AND GUTTER SECTION, REMOVE AND REPLACE ENTIRE PAVEMENT SECTION BETWEEN TRENCH AND EDGE OF PAVEMENT.

2. SEE SPECIFICATIONS FOR ANY MODIFICATIONS TO STANDARD TRENCH MATERIALS AND/OR OTHER TRENCH DESIGN FEATURES.

A / C2.2 PIPE TRENCH DETAIL
NTS

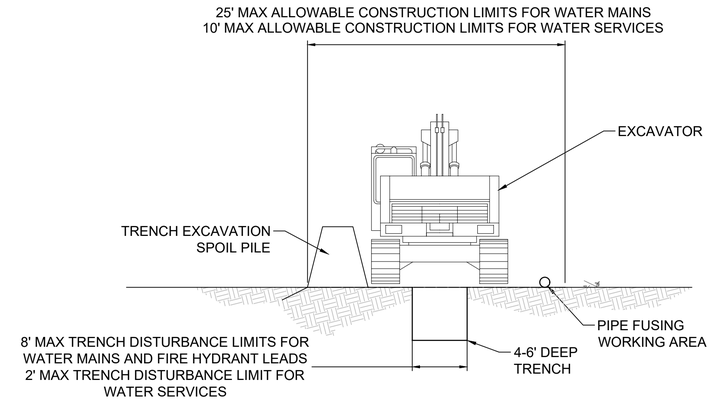

B / C2.2 TRENCH DISTURBANCE LIMITS
NTS

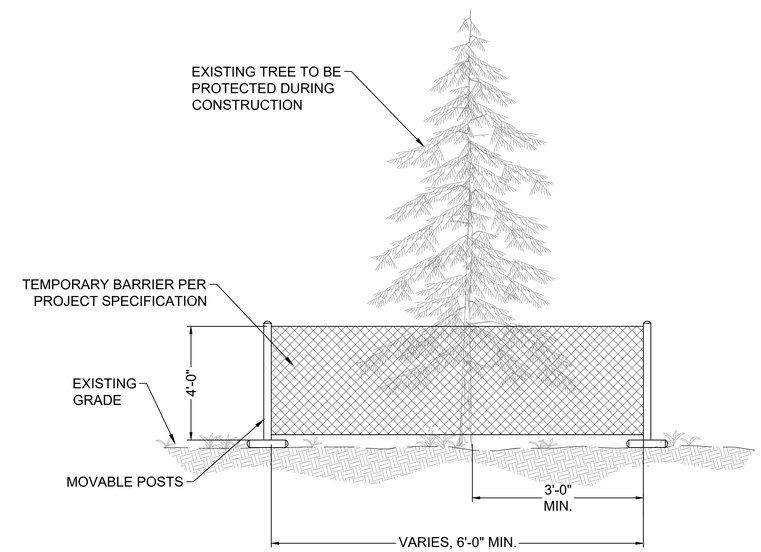

TREE PROTECTION NOTES:

1. CONTRACTOR TO REMOVE TREES WITHIN DISTURBANCE LIMITS OF NEW WATER LINE THAT RUNS THROUGH VEGETATED AREAS AS NECESSARY FOR WATER LINE INSTALLMENT. ANY TREE REMOVAL OR TRIMMING TO BE APPROVED BY CO BEFORE CONSTRUCTION.

2. PROTECT ALL TREES WITHIN 5' OF CENTERLINE OF NEW WATER MAIN (BESIDES TREES WITHIN DISTURBANCE LIMITS THAT WILL BE REMOVED). TREE PROTECTION LOCATION MAY BE ADJUSTED IN THE FIELD BY THE CONTRACTING OFFICER'S REPRESENTATIVE.

3. OUTSIDE EDGE OF TEMPORARY BARRIER SHALL BE PLACED AT DRIP-LINE OF TREE. TREE GUARDS MAY BE PLACED AROUND SINGLE TREES OR GROUPS OF TREES.

4. MOVABLE BARRIERS MAY BE SUBSTITUTED FOR IN-GROUND BARRIERS. IT IS THE CONTRACTOR'S RESPONSIBILITY TO ENSURE THAT PERIMETER OF FENCING REMAINS AT THE DRIP-LINE OF THE TREE AND THAT TREES ARE PROTECTED.

C / C2.2 TYPICAL TREE PROTECTION DETAIL
NTS

DESIGNED: EA, TF	SUB SHEET NO.	TITLE OF SHEET	DRAWING NO. 132
CADD EA, TF	C2.2	WATER SYSTEM DETAILS 1	187563
TECH. REVIEW: BE			PMIS/PKG NO. 307989A
DATE: 03/07/2025		GLACIER BAY NATIONAL PARK AND PRESERVE	SHEET 18 OF 20

8/29/24 09:41 TYLER.FRANCIS R22 C:\USERS\AARON\DJ&A, PC\DJ&A CAD USER GROUP - GENERAL\INTIATIVE#6_OTHERAGENCIES_MERGE_WITH_DJA_STANDARDS\1.1_OTHERAGENCIES_INITATIVE_TO-DO_ITEMS\NPS_MAJOR_CAD_UPDATES_2023_AARON\1_NPS_TEMPLATES-MERGER2_DJA_NPS_CTB_ALL_2018_TO_PULL

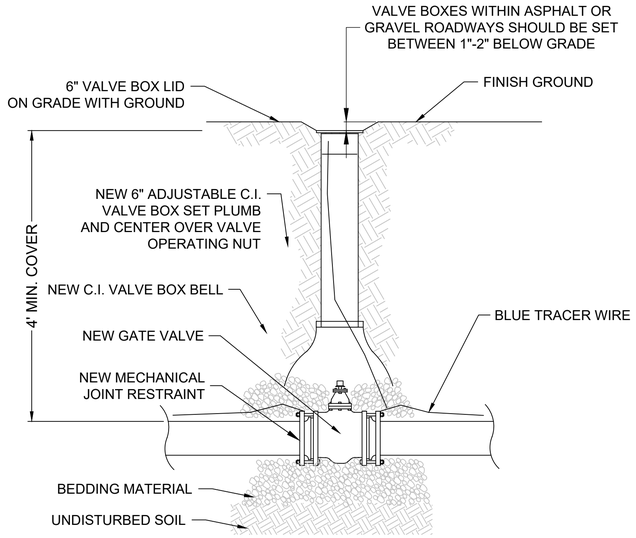

GATE VALVE NOTES:

1. WRAP ALL DIRECT BURY CAST IRON OR DUCTILE IRON PIPE AND FITTINGS INCLUDING, VALVE BOXES, AND ALL OTHER METAL PARTS AND SURFACES, IN POLYETHYLENE ENCASEMENT.

A / C2.3 GATE VALVE DETAIL
NTS

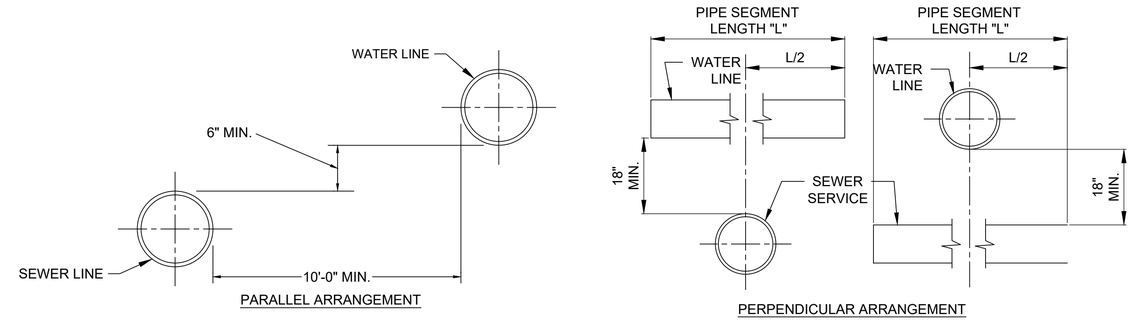

WATER-SEWER SEPARATION NOTES:

1. SPECIFIC ALASKA DEPARTMENT OF ENVIRONMENTAL CONSERVATION APPROVAL IS REQUIRED FOR A DISTANCE LESS THAN 10 FT BETWEEN WATER MAIN AND GRAVITY SEWER MAINS.
2. AT CROSSING ONE FULL LENGTH OF WATER MAIN PIPE SHALL BE LOCATED SO THAT BOTH JOINTS WILL BE AS FAR FROM THE SANITARY SEWER MAIN AS POSSIBLE.
3. SPECIFIC ALASKA DEPARTMENT OF ENVIRONMENTAL CONSERVATION APPROVAL IS REQUIRED FOR A SEPARATION OF LESS THAN SHOWN BETWEEN WATER MAIN AND SANITARY SEWER.
4. "L" IS A STANDARD LENGTH OF PIPE AS SUPPLIED BY A PIPE MANUFACTURER.
5. WHERE A WATER MAIN CROSSES UNDER A SEWER, ADEQUATE STRUCTURAL SUPPORT MUST BE PROVIDED FOR THE SEWER TO MAINTAIN LINE AND GRADE AND TO PREVENT DAMAGE TO THE WATER MAIN.

B / C2.3 WATER-SEWER PIPE SEPARATION DETAIL
NTS

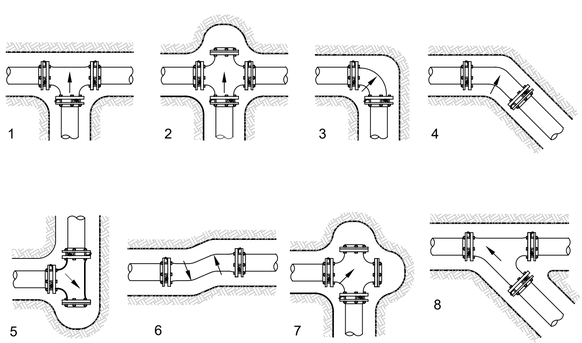

1 THRU LINE CONNECTION, TEE	5 DIRECTION CHANGE, TEE USED AS ELBOW
2 THRU LINE CONNECTION, CROSS USED AS TEE	6 DIRECTION CHANGE
3 DIRECTION CHANGE, ELBOW	7 DIRECTION CHANGE, CROSS USED AS ELBOW
4 DIRECTION CHANGE VERTICAL, BEND	8 THRU LINE CONNECTION, WYE

MECHANICAL JOINT & PIPE JOINT RESTRAINT NOTES:

1. ALL VALVES AND FITTINGS SHALL HAVE MECHANICAL JOINT RESTRAINTS AND PIPE JOINT RESTRAINTS OR FUSED JOINTS IN LIEU OF CONCRETE THRUST BLOCKS UNLESS CONNECTING TO AN EXISTING WATER SYSTEM.
2. BEND AND JOINT RESTRAINTS CAN ALSO BE SATISFIED WITH BUTT-END FUSION IN LIEU OF MECHANICAL JOINTS.

C / C2.3 MECHANICAL THRUST RESTRAINTS TYPICAL LOCATIONS (MIN)
NTS

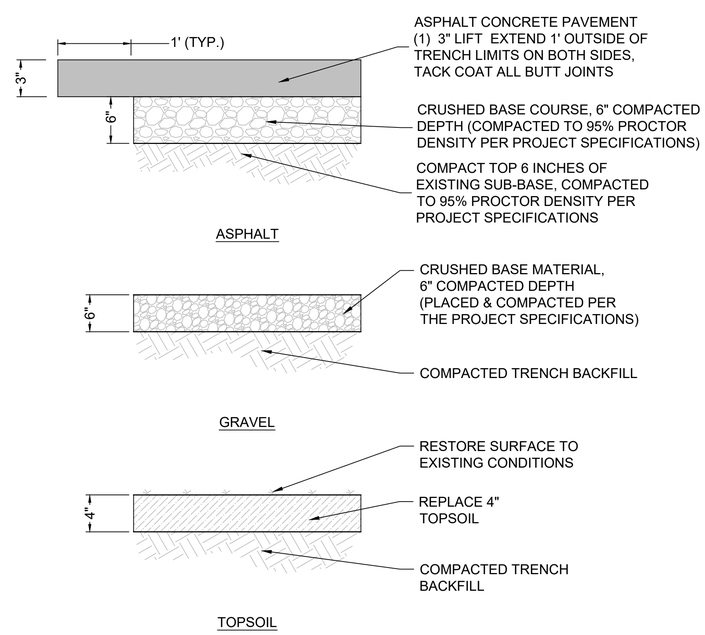

D / C2.3 PATCH DETAIL
NTS

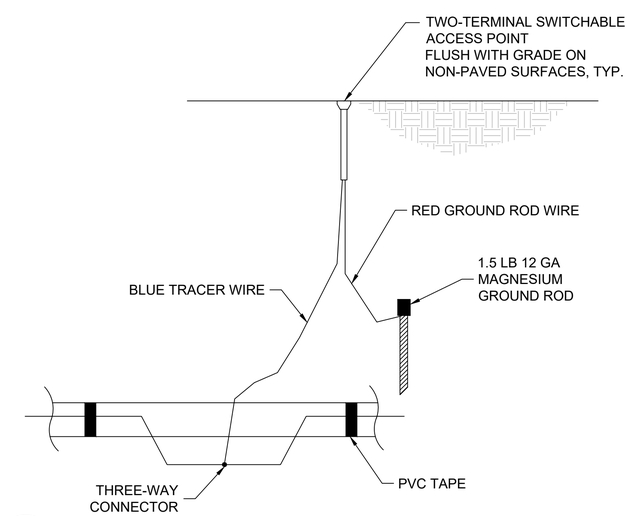

E / C2.3 TRACER BOX DETAIL
NTS

DESIGNED: EA, TF	SUB SHEET NO.	TITLE OF SHEET	DRAWING NO. 132
CADD EA, TF	C2.3	WATER SYSTEM DETAILS 2	187563
TECH. REVIEW: BE			PMIS/PKG NO. 307989A
DATE: 03/07/2025		GLACIER BAY NATIONAL PARK AND PRESERVE	SHEET 19 OF 20

8/29/24 09:41 TYLER.FRANCIS R22 C:\USERS\AARON\DJ&A, PC\DJ&A CAD USER GROUP - GENERAL\INTIATIVE#6_OTHERAGENCIES_MERGE_WITH_DJA_STANDARDS\11_OTHERAGENCIES_INITATIVE_TO-DO_ITEMS\NPS_MAJOR_CAD_UPDATES_2023_AARON\1_NPS_TEMPLATES-MERGER\2_DJA_NPS_CTB_ALL_2018_TO_PULL

1. IF MAIN IS BELOW OR ABOVE STANDARD DEPTH, USE BENDS AS REQUIRED TO INSURE THAT HYDRANT IS PLACED ABOVE GRADE AS SHOWN. PLACE BENDS BETWEEN HYDRANT VALVE & MAIN TORAISE VALVE TO NORMAL DEPTH WHEN MAIN IS BELOW DEPTH SHOWN.
2. A MINIMUM 3-FT RADIUS CLEAR SPACE SHALL BE MAINTAINED AROUND THE FIRE HYDRANTS OR AS APPROVED BY THE CO, PER IFC SECTION 507.5.5.
3. WRAP ALL DIRECT BURY CAST IRON OR DUCTILE IRON PIPE AND FITTINGS INCLUDING HYDRANTS, VALVE BOXES, AND ALL OTHER METAL PARTS AND SURFACES, IN POLYETHYLENE ENCASEMENT.

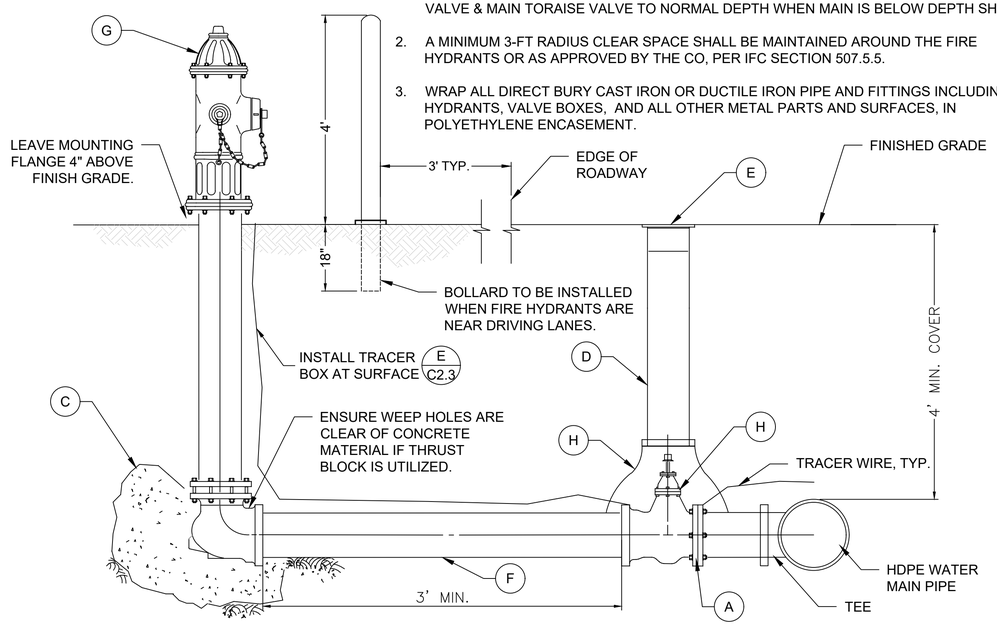

A	APPROPRIATE SIZE X 6" FLG. AS REQUIRED.
B	6" FLG. OR MJ (OR COMBINATION) GATE VALVE--MUELLER OR APPROVED EQUAL
C	CONCRETE THRUST BLOCK, IN ADDITION TO MECHANICAL JOINT RESTRAINT OR TIE-BOLT RESTRAINTS.
D	6" ADJUSTABLE C.I. VALVE BOX
E	6" VALVE BOX LID
F	6" HDPE PIPE WITH #14 COATED TRACE WIRE
G	6" MUELLER CENTURION HYDRANT ASSEMBLY OR APPROVED EQUAL--MJ OR FLANGED
H	6" C.I. VALVE BOX BELL WITH MOUSE HOLE AND TIGHT FIT AROUND PIPE

A C2.4 FIRE HYDRANT ASSEMBLY DETAIL
NTS

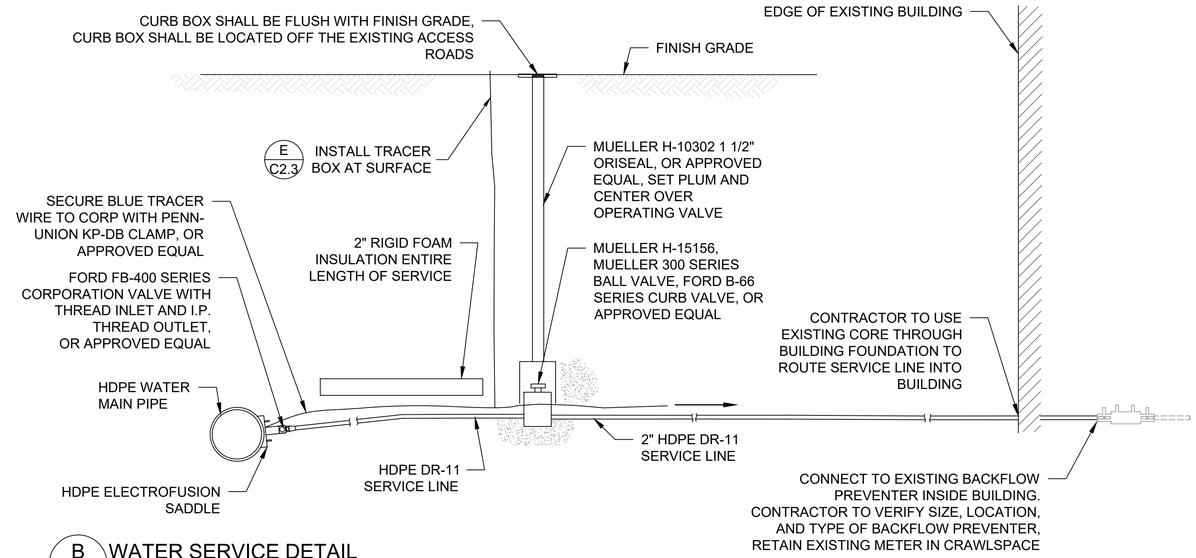

B C2.4 WATER SERVICE DETAIL
NTS

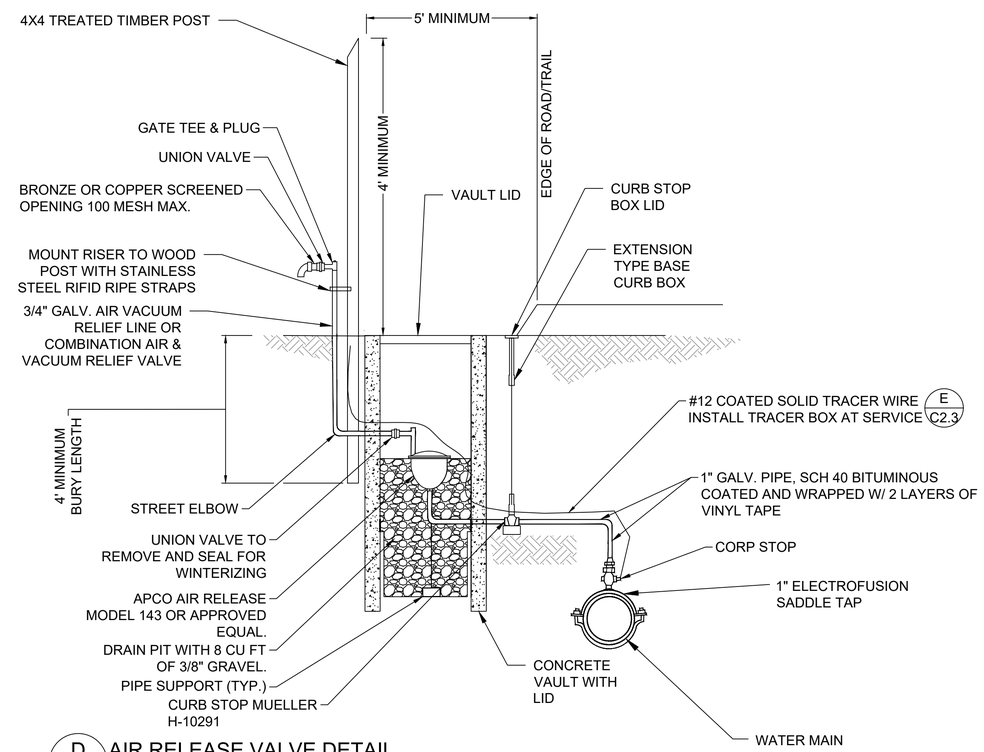

D C2.4 AIR RELEASE VALVE DETAIL
NTS

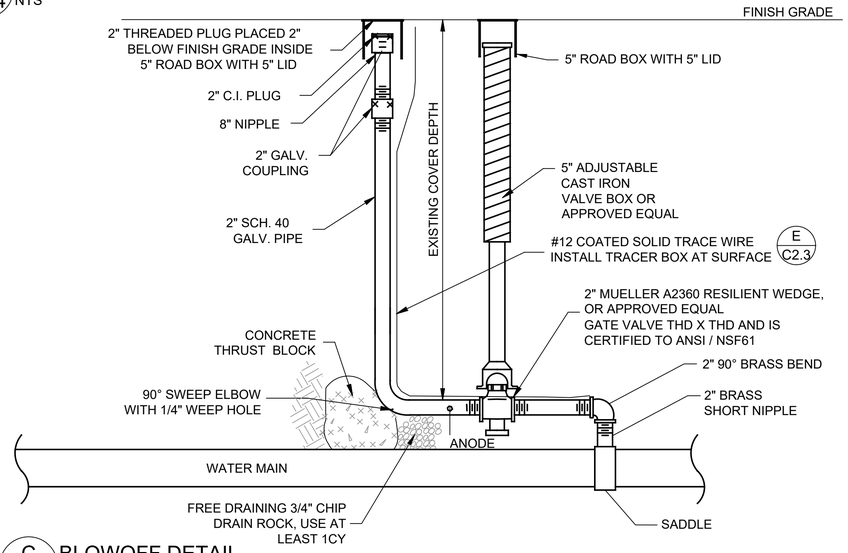

C C2.4 BLOWOFF DETAIL
NTS

DESIGNED:	SUB SHEET NO.	TITLE OF SHEET	DRAWING NO.
EA, TF	C2.4	WATER SYSTEM DETAILS 3	132
CADD: EA, TF			187563
TECH. REVIEW: BE			PMIS/PKG NO. 307989A
DATE: 03/07/2025		GLACIER BAY AND PRESERVE NATIONAL PARK	SHEET 20 OF 20

8/29/24 09:41 TYLER.FRANCIS R22 C:\USERS\AARONDJ&A, PC\DJ&A CAD USER GROUP - GENERAL\INITIATIVE#6_OTHERAGENCIES_MERGE_WITH_DJA_STANDARDS\1.1_OTHERAGENCIES_INITATIVE_TO-DO_ITEMS\NPS_MAJOR_CAD_UPDATES_2023_AARON\1_NPS_TEMPLATES-MERGER\2_DJA_NPS_CTB_ALL_2018_TO_PULL