INCH-POUND
GL/PD 14-05C
25 January 2024
SUPERSEDING
GL/PD 14-05B
7 March 2023

DETAIL SPECIFICATION

TROUSERS, ADVANCED COMBAT UNIFORM

This specification is approved for use by DLA Troop Support and is available for use by all Departments and Agencies of the Department of Defense (DoD).

1. SCOPE

1.1 Scope. This specification covers the requirements for unisex and female advanced combat trousers to be worn by Military personnel.

1.2 Classification. The trousers will be of the following types, styles, classes and sizes as specified.

1.2.1 Types.

Type I - 50/50 Nylon/Cotton Ripstop
Type II - DELETED
Type III - Flame Resistant (FR) Cloth Ripstop

1.2.2 Styles.

Style A - Unisex
Style B - Female

1.2.3 Classes.

Class 1 - Untreated
Class 2 - Permethrin Treated
Class 3 - Insect Repellent Treated (Etofenprox)

Comments, suggestions, or questions on this document should be addressed to: Department of the U.S. Army, DEVCOM – Soldier Center, ATTN: FCDD-SCD-PEI, 10 General Greene Avenue, Natick, MA 01760-5019.

AMSC N/A FSC 8415

DISTRIBUTION STATEMENT A. Approved for public release. Distribution is unlimited.

1.2.4 Sizes. The trousers sizes will be as follows:

STYLE A. UNISEX SCHEDULE OF SIZES					
X-Small (XS)	Small (S)	Medium (M)	Large (L)	X-Large (XL)	XX-Large (XXL)
X-Short (X-S)	X-Short	X-Short	X-Short	X-Short	X-Short
Short (S)	Short	Short	Short	Short	Short
Regular (R)	Regular	Regular	Regular	Regular	Regular
Long (L)	Long	Long	Long	Long	Long
X-Long(X-L)	X-Long	X-Long	X-Long	X-Long	X-Long
XX-Long (XX-L)	XX-Long	XX-Long	XX-Long	XX-Long	XX-Long

STYLE B. FEMALE SCHEDULE OF SIZES			
25	28	31	35
X-Short	X-Short	X-Short	----
Short	Short	Short	Short
Regular	Regular	Regular	Regular
----	Long	Long	Long
----	----	X-Long	X-Long

2. APPLICABLE DOCUMENTS

2.1 General. The documents listed in this section are specified in sections 3 and 4 of this specification. This section does not include documents cited in other sections of this specification or recommended for additional information or as examples. While every effort has been made to ensure the completeness of this list, document users are cautioned that they must meet all specified requirements of documents cited in sections 3 and 4 of this specification, whether or not they are listed.

2.2 Government documents.

2.2.1 Specifications, standards, and handbooks. The following specifications, standards, and handbooks form a part of this document to the extent specified herein. Unless otherwise specified, the issues of these documents are those cited in the solicitation or contract.

COMMERCIAL ITEM DESCRIPTIONS

A-A-50198 - Thread, Gimp, Cotton, Buttonhole
A-A-50199 - Thread, Polyester Core, Cotton or Polyester Covered
A-A-55195 - Thread, Para-Aramid, Spun, Intermediate Modulus
A-A-55217 - Thread, Aramid, Spun, Staple
A-A-59826 - Thread, Nylon
A-A-59994 - Button, Sewing, Hole and Button Staple (Plastic)

DEPARTMENT OF DEFENSE SPECIFICATIONS

MIL-DTL-5038 - Tape, Textile and Webbing, Textile, Reinforcing Nylon
MIL-W-5664 - Webbing, Textile Elastic
MIL-DTL-32075 - Label: For Clothing, Equipage, and Tentage (General Use)
MIL-PRF-32635 - Cloth, Flame Resistant
MIL-PRF-32659 - Textiles: Vector Protection Treatment of
MIL-DTL-44436 - Cloth, Camouflage Pattern, Wind Resistant Poplin, Nylon/Cotton Blend

(Copies of these documents are available online at https://quicksearch.dla.mil.)

2.2.2 Other Government documents, drawings, and publications. The following other Government documents, drawings, and publications form a part of this document to the extent specified herein. Unless otherwise specified, the issues are those cited in the solicitation or contract.

OTHER GOVERNMENT DOCUMENTS AND PUBLICATIONS

PURCHASE DESCRIPTIONS

GL-PD-10-08 - Patch Kit, Integrated, Flame Resistant (IPK)

(Copies of this document are available through the contracting activity.)

2.3 Non-Government publications. Unless otherwise specified, the issues of these documents are those cited in the solicitation or contract. The following documents form a part of this document to the extent specified herein.

AMERICAN ASSOCIATION OF TEXTILE CHEMISTS AND COLORISTS (AATCC)

AATCC EP1 - Evaluation Procedure for Gray Scale for Color Change
AATCC EP2 - Evaluation Procedure for Gray Scale for Staining
AATCC EP8 - Evaluation Procedure for AATCC 9 Step Chromatic Transference Scale
AATCC TM8 - Test Method for Colorfastness to Crocking: AATCC Crockmeter Method
AATCC TM15 - Test Method for Colorfastness to Perspiration
AATCC TM61 - Test Method for Colorfastness to Laundering: Accelerated
AATCC TM81 - Test Method for pH of the Water-Extract from Wet Processed Textiles
AATCC TM96 - Test Method for Dimensional Changes in Commercial Laundering of Woven and Knitted Fabrics Except Wool
AATCC TM135 - Test Method for Dimensional Changes of Fabrics After Home Laundering

(Copies of these documents are available online at https://aatcc.org.)

AMERICAN SOCIETY FOR QUALITY (ASQ)

ASQ/ANSI Z1.4 Sampling Procedures and Tables for Inspection of Attributes

(Copies of this document are available online at https://asq.org.)

ASTM INTERNATIONAL

ASTM D76/D76M - Standard Specification of Tensile Testing Machines for Textiles
ASTM D1424 - Standard Test Methods for Tearing Strength of Fabrics by Falling-Pendulum Type (Elmendorf) Apparatus
ASTM D1776/D1776M - Standard Practice for Conditioning and Testing Textiles
ASTM F1930 - Standard Test Method for Evaluation of Flame Resistant Clothing for Protection Against Flash Fire Simulations Using an Instrumented Manikin
ASTM D3776/D3776M - Standard Test Method for Mass Per Unit Area (Weight) of Fabric
ASTM D3990 - Standard Terminology Relating to Fabric Defects
ASTM D5034 - Standard Test Method for Breaking Strength and Elongation of Textile Fabrics (Grab Test)
ASTM D6193 - Standard Practice for Stitches and Seams
ASTM D6413/D6413M - Standard Test Method for Flame Resistance of Textiles (Vertical Test)

(Copies of these documents are available online at https://www.astm.org.)

OTHER PUBLICATIONS

SDL ATLAS

Part Number 402985 – Slub/Knot Replica Set (Fabric Defect Replica Scales)

(Replica set is available for purchase from SDL Atlas Customer Service, 1-803-329-2110)

2.4 Order of precedence. Unless otherwise noted herein or in the contract, in the event of a conflict between the text of this document and the references cited herein, the text of this document takes precedence. Nothing in this document, however, supersedes applicable laws and regulations unless a specific exemption has been obtained.

3. REQUIREMENTS

3.1 Inspections.

3.1.1 First article. When specified (see 6.2), a sample shall be subjected to first article inspection in accordance with 4.2.

3.1.2 Conformance inspection. When specified (see 6.2), a sample shall be subjected to conformance inspection in accordance with 4.3.

3.2 Recycled, recovered, environmentally preferable, or biobased materials. Recycled, recovered, environmentally preferable, or biobased materials should be used to the maximum extent possible, provided that the material meets or exceeds the operational and maintenance requirements, and promotes economically advantageous life cycle costs.

3.3 Design. The trousers design for Style A-Unisex shall have a waistband with clean finished ends and button/buttonhole closure (see 3.7.1). Style B female trousers shall have two (2) elasticized portions and button/buttonhole closure (see 3.7.2). Both style trousers shall have seven (7) belt loops along with a covered fly with three (3) buttons and buttonhole closure (see 3.7.4). Both style trousers shall have two (2) side hanging pockets, two (2) back single welt hip pockets with two (2) button closure flaps, two (2) front side pleated cargo pockets with three (3) buttons/two (2) buttonholes closure flaps and two (2) lower leg pockets with one (1) button/ buttonhole closure flaps. Both styles shall have side cargo pockets and lower leg pockets that have sewn-in eyelets at the bottom of each of the bellows. Both styles shall have a double needle seat patch and shall have knee reinforcement patches. Each style shall have a drawstring at each leg bottom.

3.4 Materials.

3.4.1 Basic material (Type I only). The basic material for the Type I trousers shall be a 50/50 nylon/cotton blend, wind resistant poplin ripstop cloth in Operational Camouflage Pattern (OCP) conforming to Class 14, of MIL-DTL-44436 as specified (see 6.2).

3.4.2 DELETED (see 6.9.1).

3.4.3 Basic material (Type III only). The basic material for the Type III trousers shall be an FR ripstop cloth conforming to MIL-PRF-32635 Type III, Class 1 in OCP, Class 3 in Digital Print Desert Camouflage Navy Working Uniform (NWU) II and Class 4 in Digital Print Woodland Camouflage NWU III, as specified (see 6.2).

3.4.3.1 The finished Type III trousers for all styles and classes shall meet the requirement in Table I when tested as specified in 4.4.3.

TABLE I. Basic material requirement (Type III only) 1/

Characteristic	**Requirement**
Flash fire (Predicted Burn Injury), percent (max.) 1/, 2/	
With head	35
Without head	28

1/ First Article Testing only
2/ 4 second exposure

3.4.4 Insect bite protection (all types). Materials may be treated as an option to obtain bite protection performance. Insect repellent treatment processes shall be in accordance with MIL-PRF-32659. The treated fabric and/or items shall be labeled in accordance with MIL-PRF-32659. The insect repellent finish shall be uniformly applied across the treated fabric and/or items at an initial target level as specified in the EPA registered label. The treatment level shall provide the percent (%) bite protection specified in 3.5.1. The finished insect repellent treatment shall not degrade any performance characteristics or present any latent defects to the treated fabric and/or items.

3.4.5 Cloth, side and hip hanging pockets, and waistband lining (all types, styles and classes). The cloth for waistband lining, side and hip pockets, shall be basic printed material or basic printed material seconds. Seconds shall be basic material which has been rejected only for defects pertaining to shade, infrared reflectance, or camouflage printed pattern as outlined in the appropriate material specification.

3.4.5.1 Alternate cloth, side and hip hanging pockets (all types, styles and classes). As an alternate for the Type I trousers only, a 5.0 oz/sq. yd. minimum, plain weave, 75 percent (%) polyester 25 percent (%) cotton material or equal may be used for side and hip hanging pockets only. The color for the alternate material shall be Tan 499 for OCP uniforms. All other alternate materials shall meet the requirements outlined in Table I.A when tested as specified in 4.4.2.

TABLE I.A. Alternate side and hip hanging pockets material (all types, styles and classes).

Characteristic	**Requirement**	
	Type I	**Type III**
Weight, oz./sq.yd.		
minimum	6.0	5.5
maximum	7.0	8.5
Breaking strength, pounds (min.)		
Warp	190	100
Filling	80	70
Tearing strength, pounds, Dry (min.)		
Warp	7.0	4.0
Filling	5.0	4.0
Dimensional stability, percent (After 5 laundering cycles)(max.) Warp and Filling:		
Individual Sample	3.5	4.0
Lot Average	3.0	3.5
Laundering (4 Cycles) All colors (Color change and Staining) (min.)	3	3
Crocking (wet and dry) All colors (min.)	3.5	3.5
Perspiration All colors (Color change and Staining) (min.)	3-4	

TABLE I.A. Alternate side and hip hanging pockets material (all types, styles and classes). – Continued

Characteristic	**Requirement**	
	Type I	**Type III**
Flame resistance: Initial –		
After Flame, seconds (max.)		2.0
After Glow, seconds (max.)	N/A	25.0
Char Length, inches (max.)		4.5
Flame resistance:		
After 25 launderings –		
After Flame, seconds (max.)	N/A	2.0
After Glow, seconds (max.)		25.0
Char Length, inches (max.)		4.5

3.5 Insect bite protection (Classes 2 and 3 only, all styles). The finished garments with insect repellent treatment shall provide the minimum mosquito bite protection specified in 3.5.1 and the treatment shall be strictly limited to the levels specified in the contract and is active ingredient dependent.

NOTE: Unless otherwise specified in the contract or solicitation the following dosage rates apply:

Type I, Class 2 (Permethrin): 0.095-0.135 mg/cm^2
Type I, Class 3 (Etofenprox): 0.165-0.242 mg/cm^2
Type III, Class 2 (Permethrin): 0.095-0.140 mg/cm^2
Type III, Class 3 (Etofenprox): 0.181-0.266 mg/cm^2

3.5.1 Percent (%) bite protection. Finished insect repellent treated garments shall provide the minimum bite protection specified below when assessed by the biting protection testing specified in 4.4.3. Government approval shall be required initially, and any time there is a change in the insect repellent treatment formulation or processing conditions.

Condition	Type I, Class 2 and 3 % Bite Protection	Type III, Class 2 and 3 % Bite Protection
Initial (1 Wash)	>/= 90%	>/= 85%
After 20 launderings	>/= 90%	>/= 80%
After 50 launderings	>/= 90%	>/= 80%

3.5.1.1 Insect repellent garment treatment of camouflage patterns (Classes 2 and 3 only, all styles). The mixing of camouflage patterns in the same insect repellent treatment garment application is not allowed. Patterns shall be treated separately.

3.5.1.2 Insect repellent garment application finished measurements (Classes 2 and 3 only, all styles). Manufacturers shall comply with the finished measurement requirements in 3.12.1 and compensate for actual fabric shrinkage or growth after the application of garment treatment in accordance with the requirements in MIL-PRF-32659.

3.5.2 Insect repellent treatment (Class 2 and 3 only, all styles). Insect repellent treatment process shall be in accordance with MIL-PRF-32659. The treated items shall be labeled in accordance with 3.8.3 and 3.8.4. The insect repellent finish shall be uniformly applied across the treated item at an initial target level as specified in the EPA registered label. The treatment level shall provide the percent (%) bite protection specified in 3.5.1. The finished insect repellent treatment shall not degrade any performance characteristics or present any latent defects to the treated item.

3.5.3 pH (Class 2 and 3 only). The pH value of the water extract of all the finished cloth and garments shall be no lower than 5.0 or higher than 8.5 when tested as specified in 4.4.3.

3.6 Components materials and shade (all types, styles, and classes). The component materials for the trousers shall be made in accordance with 3.4 -3.6.5. Component materials for the trousers are for all types, classes and styles unless otherwise noted. All component shade shall be Tan 499 for OCP, NWU II and NWU III uniforms with the exception of 3.6.5, Integrated Patch Kit (IPK) for Class 3 of GL-PD-10-08C only and some NWU III components. IPK shade shall be the camouflage print of the uniform, and NWU III sewing thread and gimp shall match Green 383.

3.6.1 Tape.

3.6.1.1 Hem tape (drawstring). The tape for the leg bottom hem shall conform to MIL-DTL-5038, Type III, 3/8-inch wide. The drawstring tape for the leg bottom hem shall be cut 32 (± 1) inches in length for all sizes. The tape ends shall be heat cut to prevent raveling.

3.6.1.2 Tape, FR identification marker (Type III only, all styles and classes). The tape for the FR identification marker shall be 1-inch wide conforming to Type III of MIL-DTL-5038. The tape ends shall be heat cut to prevent raveling.

3.6.2 Elastic webbing (Style B). The elastic webbing for the female trousers waistband shall be natural in color and be 1-1/2-inch wide and conform to, or have performance characteristics equal to or better than, Type II, Class 1 of MIL-W-5664. The elastic for the waistband shall be cut to the length needed to achieve both the trousers 1/2 waist finished relaxed and finished stretched measurements (for each size) as specified in 3.12.1 and Table VIIIB (see 3.7.2) and the elongation force specified below. Testing shall be as specified in 4.4.2.

	Elongation (inches)	Force (lbs.)	
	(±1/16)	Minimum	Maximum
Waistband	1-1/2	1.5	4.0

3.6.3 Thread (Type I only, all styles and classes). The thread for all seaming and stitching for the Type I trousers shall conform to Table II. All thread shall be non-staining and the requirements in each Commercial Item Description (CID) shall apply.

TABLE II. Thread requirements, Type I trousers only.

Component area	**Thread specification**	**Needle thread (Tex size) 1/**	**Bobbin/ Looper thread (Tex size) 1/**
All seaming, stitching and bar-tacking	A-A-50199, Type I	46-60	46-60
Button attachment	A-A-50199, Type I	71-105	71-105
Seat patch	A-A-50199, Type I	46-60	46-60
Overedge stitching (raw edges)	A-A-50199, Type I	21-24	21-24
Crotch	A-A-59826, Type I	45-46	45-46

1/ Needle & Bobbin/Looper shall use same Tex size thread.

3.6.3.1 Thread (Type III only, all styles and classes). The thread for all seaming and stitching shall be as specified in Table III. All thread shall be non-staining and the requirements in each respective Commercial Item Description (CID) shall apply.

TABLE III. Thread requirements, Type III trousers only.

Component area	**Thread specification**	**Needle thread (Tex size) 1/**	**Bobbin/ Looper thread (Tex size) 1/**
All seaming except small parts	A-A-55195, Type II A-A-55217, Type I	59 50-60	59 50-60
Small parts, pockets, flaps, top stitching, tabs, hems and eyelets, identification marker and labels	A-A-55195, Type I A-A-55195, Type II A-A-55217, Type I	59 20 50-60	59 20 50-60
Overedge/Serge for raw edge cover	A-A-55195, Type I A-A-55195, Type II A-A-55217, Type I	39 14 24-27	39 14 24-27
Crotch seam and seat patch	A-A-55195, Type I A-A-55195, Type II A-A-55217, Type I	78 59 70-80	78 59 70-80
Button attachment	A-A-55195, Type I A-A-55195, Type II A-A-55217, Type I	59 39 50-60	59 39 50-60

1/ Needle & Bobbin/Looper shall use same Tex size thread.

3.6.3.2 Gimp. The cotton gimp for reinforcing buttonholes shall conform to A-A-50198, soft or glazed finish, Tex Size 180 or 210.

3.6.4 Buttons. Buttons shall be dull finish, four (4) holes, 30 ligne conforming to A-A-59994, Type I, Class 1, Style 26. When attached to the trousers, the button and thread shall withstand 40 pounds (minimum) when tested as specified in 4.4.3.

3.6.5 Integrated Patch Kit (IPK) (Type III only, all styles and classes). The IPK shall conform to the requirements of GL/PD 10-08. OCP uniforms shall use Class 3, Size R. (See 6.9)

3.7 Construction (all types, styles and classes). The construction for the trousers shall be made in accordance with 3.7.1 - 3.7.12. Construction is for all types, styles and classes unless otherwise noted. All material edges shall be clean finished: turned-in, turned-under, or serged, unless otherwise indicated. All components with a grain line shall follow the grain line of the basic garment material or as indicated on pattern.

3.7.1 Unisex waistband (Style A only, all types and classes). The finished waistband shall measure 1-3/4 (± 1/8) inches wide with clean finished ends and a button/buttonhole closure. The width of the waistband shall be consistent so that the right and left sides match each other in width at the front within 3/16-inch. The waistband shall have a button and horizontal buttonhole closure that shall align vertically with the fly button and buttonhole closure (see figures 6A and 6B).

3.7.2 Stretch waistband (Style B only, all types and classes). The finished waistband shall measure 1-3/4 (± 1/8) inches wide with clean finished ends and a button/buttonhole closure that shall align vertically with the fly button/buttonhole closure (see figures 6A and 6B). The width of the waistband shall be consistent so that the right and left sides match each other in width at the front within 3/16-inch. The waistband shall have an elasticized portion at each side of the waist that starts at the front of the pocket bearer and extends past the outseam and belt loop into the back of the trousers to achieve the finished waist stretch circumference for each size (see figure 1). For sizes 25 and 28, the elastics shall be approximately 7-inches long and be bar-tacked approximately 1/2-inch from each end. For sizes 31 and 35 the elastics shall be approximately 8-inches long and be bar-tacked approximately 1/2-inch from each end. The waistband elastic shall be stitched and bar-tacked as outlined in Tables VI and VII. For alternate waistband construction see Table VI, Footnote 2/.

3.7.3 Belt loops. The trousers shall have seven (7) belt loops measuring 5/8 (± 1/16) inch in width and finish 2-1/8 (± 1/8) inches between bar-tacks in the length. Bar-tacks shall be set 1/8-inch from the top and bottom edge. The belt loop's underside folded raw edge shall not extend past the belt loop finished edge more than 3/8-inch. The belt loop placement shall be as follows: one (1) loop on each side seam, one (1) on back seam, and one (1) on each front centered between side seam and waistband end, and one (1) on each back side centered between side seam and back seam. Belt loops may be positioned immediately adjacent to felled seams to reduce bulk in sewing. When positioning belt loops adjacent to side seam, the belt loop shall be placed toward the front.

3.7.4 Fly. The fly shall be a covered fly with three (3) buttons and buttonhole closure. The buttonholes shall be horizontal and placed as indicated on the pattern. The fly shall have "J" stitching 2 (± 1/8) inches from fly edge. The top fly shall be edge stitched 1/16 to 1/8-inch (see figure 6B).

3.7.5 Seat patch. The trousers shall have a double-needle seat patch (see pattern for placement) (see figure 2).

3.7.6 Knee reinforcement. The trousers shall have a knee reinforcement patch on each leg, stitched down around all four (4) sides (see pattern for placement).

3.7.7 Pockets and flaps.

3.7.7.1 Front side pockets. The trousers shall have two (2) front side hanging pockets with pocket openings measuring 6-3/4 (± 1/2) inches between bar-tacks. Pocket openings shall match each other within 1/4-inch. Any raw edge shall be overedge stitched.

3.7.7.2 Hip pockets. The trousers shall have back left and right single welt hip pockets with a two (2) button/buttonhole closure per pocket. The finished welt shall measure 1/4 (± 1/16) inch. The buttons shall be sewn onto the outside of the pocket and the buttonholes shall be vertical and sewn into the underside of the flap as indicated on patterns (see figure 4).

3.7.7.3 Cargo pockets and flaps. The trousers shall have two (2) pleated bellows cargo pockets with flaps (see pattern for placement). The pockets shall have a sewn-in eyelet at the bottom side edge of bellow, as indicated on the pattern (see 3.7.10). The top of the folded finished pocket flaps shall finish 3/4-inch from the folded edge of pocket top (see pattern for placement). The pleated bellows shall be edge stitched to secure pleat stability. The cargo pockets and flaps shall close with a three (3) button (2) buttonhole closure per pocket. The buttons shall be sewn onto the outside of the pocket and the buttonholes shall be vertical and sewn onto the underside of the flap as indicated on patterns (see figure 3). The cargo pocket top edge may be constructed with automated equipment.

3.7.7.4 Lower leg pockets and flaps. The trousers shall have two (2) lower leg bellows pockets with flaps (see pattern for placement). The pockets shall have a sewn-in eyelet at the bottom of the bellow (see 3.7.10), as indicated on pattern (see figure 5). The top of the folded finished pocket flaps shall finish 1/2-inch from the folded edge of pocket top (see pattern for placement). The pockets shall close with one (1) button sewn onto the outside of the pocket as indicated on the pattern. The buttonhole shall be vertical and sewn into the underside of the flap as indicated on the pattern. See pattern for button and buttonhole placement.

3.7.8 Leg bottom hem and drawstring. The leg bottoms shall be hemmed and shall have a drawstring inserted through two (2) sewn-in eyelets or two (2) 1/2-inch horizontal straight cut buttonholes with reinforcement piece as indicated on patterns (see 3.7.9 and 3.11.1). The drawstring tape (see 3.6.1.1) shall overlap (cross) between holes when threaded through the hem casing. The drawstring shall be heat sealed at each end before packaging. The finished hem shall measure 7/8 (±1/8) inch wide.

3.7.9 Buttonholes. The buttonholes shall be eyelet-end tapered bar type worked over gimp for the fly, back hip welt pocket flaps, cargo pocket flaps and lower leg pocket flaps with not less than four (4) tacking stitches at bar end catching the gimp ends (not counting the crossover stitch). The purling shall be on the outside surface. The cut lengths shall be 3/4-inch to 7/8-inch. The

buttonholes shall be clean cut with the stitching securely caught in fabric. When buttonholes are used in lieu of sewn-in eyelets for the waistband and leg bottom hem drawstrings they shall be 1/2-inch vertical straight cut for the waistband and 1/2-inch horizontal straight cut for the leg bottom hem.

3.7.10 Eyelets. The sewn-in eyelets for the cargo pocket and lower leg pocket bellows shall have a 1/4 (± 1/16) inch diameter finished opening. When sewn-in eyelets are used for the leg bottom they shall measure 3/8 (± 1/8) inch in diameter. See pattern for placement.

3.7.11 Identification FR marker (Type III only, all styles and classes). The Type III trousers shall have a tape marker as specified in 3.6.1.2 centered (vertically and horizontally) on the left cargo pocket flap as worn and shall be visible from the outside when worn (see pattern for placement). The tape marker shall be clean finished, or heat sealed and finish 1 (± 1/8) inch in length. The finished tape identification marker shall be box stitched as specified in Table VI. The thread shall be in accordance with the requirements for the Type III trousers (see 3.6.3.1). (See figures 1 and 2).

3.7.12 Integrated Patch Kit (IPK) placement (Type III only, all styles and classes). The Type III trousers shall have an IPK placed into the finished left hip pocket, as worn. The IPK shall be placed into the pocket after insect repellent treatment with the shortest dimension vertical and shall lie flat after placement in pocket. The pocket shall be secured with at least one (1) button to prevent IPK from falling out.

3.8 Labels (all types, styles and classes). Unless otherwise noted, labels are for all types, styles and classes. All garments shall have a size label and a combination identification/care label sewn or stamped into the trousers. All garments shall have a barcode hang tag. Class 2 and Class 3 trousers shall have an additional insect protection/identification/care label sewn or stamped into the trousers and a hang tag. The printing for all labels shall be black. The font size for the inscription of the size label shall be 10 points. The inscription shall have a minimum font size of 8 points for identification/care label and insect protection/identification/care label only. Inscription shall be legible. Sewn in labels and printing and/or stamping shall last the expected life of the trousers.

3.8.1 Size label. The size label shall conform to Type VI, Class 2 of MIL-DTL-32075 and shall be sewn and caught in the bottom of the inside waistband seam. The stitching shall not cover the printing. The color of the size label for the Type I trousers shall be white or approximate the ground shade of the basic fabric and for the Type III trousers the color of the size label shall be Urban Gray 501. As an alternate, may use a stamp at the bottom of the inside waistband seam. The color base of stamping for the Types I and II trousers shall be white, and Urban Gray base for Type III with black letters. The size label shall include the information in Table IV.A and Table IV.B for the applicable size:

TABLE IV.A. Style A. Unisex size label.

X-Small – X-Short Inseam: 23-1/2 to 26-1/2 in. Waist: 23 to 27 in. NSN No. NATO Size: 6067/5869	X-Small – Short Inseam: 26-1/2 to 29-1/2 in. Waist: 23 to 27 in. NSN No. NATO Size: 6775/5869	X-Small – Regular Inseam: 29-1/2 to 32-1/2 in. Waist: 23 to 27 in. NSN No. NATO Size: 7583/5869
X-Small – Long Inseam: 32-1/2 to 35-1/2 in. Waist: 23 to 27 in. NSN No. NATO Size: 8390/5869	X-Small – X-Long Inseam: 35-1/2 to 38-1/2 in. Waist: 23 to 27 in. NSN No. NATO Size: 9098/5869	X-Small – XX-Long Inseam: Over 38-1/2 in. Waist: 23 to 27 in. NSN No. NATO Size: 9805/5869
Small – X-Short Inseam: 23-1/2 to 26-1/2 in. Waist: 27 to 31 in. NSN No. NATO Size: 6067/6979	Small – Short Inseam: 26-1/2 to 29-1/2 in. Waist: 27 to 31 in. NSN No. NATO Size: 6775/6979	Small – Regular Inseam: 29-1/2 to 32-1/2 in. Waist: 27 to 31 in. NSN No. NATO Size: 7583/6979
Small – Long Inseam: 32-1/2 to 35-1/2 in. Waist: 27 to 31 in. NSN No. NATO Size: 8390/6979	Small – X-Long Inseam: 35-1/2 to 38-1/2 in. Waist: 27 to 31 in. NSN No. NATO Size: 9098/6979	Small – XX-Long Inseam: Over 38-1/2 in. Waist: 27 to 31 in. NSN No. NATO Size: 9805/6979
Medium – X-Short Inseam: 23-1/2 to 26-1/2 in. Waist: 31 to 35 in. NSN No. NATO Size: 6067/7989	Medium – Short Inseam: 26-1/2 to 29-1/2 in. Waist: 31 to 35 in. NSN No. NATO Size: 6775/7989	Medium – Regular Inseam: 29-1/2 to 32-1/2 in. Waist: 31 to 35 in. NSN No. NATO Size: 7583/7989
Medium – Long Inseam: 32-1/2 to 35-1/2 in. Waist: 31 to 35 in. NSN No. NATO Size:8390/7989	Medium - X-Long Inseam: 35-1/2 to 38-1/2 in. Waist: 31 to 35 in. NSN No. NATO Size: 9098/7989	Medium - XX-Long Inseam: 38-1/2 to 41-1/2 in. Waist: 31 to 35 in. NSN No. NATO Size: 9805/7989
Large - X-Short Inseam: 23-1/2 to 26-1/2 in. Waist: 35 to 39 in. NSN No. NATO Size: 6067/8999	Large – Short Inseam: 26-1/2 to 29-1/2 in. Waist: 35 to 39 in. NSN No. NATO Size: 6775/8999	Large - Regular Inseam: 29-1/2 to 32-1/2 in. Waist: 35 to 39 in. NSN No. NATO Size: 7583/8999
Large – Long Inseam: 32-1/2 to 35-1/2 in. Waist: 35 to 39 in. NSN No. NATO Size: 8390/8999	Large - X-Long Inseam: 35-1/2 to 38-1/2 in. Waist: 35 to 39 in. NSN No. NATO Size: 9098/8999	Large - XX-Long Inseam: Over 38-1/2 in. Waist: 35 to 39 in. NSN No. NATO Size: 9805/8999

TABLE IV.A. Style A. Unisex size label. - Continued

X-Large - X-Short Inseam: 23-1/2 to 26-1/2 in. Waist: 39 to 43 in. NSN No. NATO Size: 6067/9909	X-Large - Short Inseam: 26-1/2 to 29-1/2 in. Waist: 39 to 43 in. NSN No. NATO Size: 6775/9909	X-Large - Regular Inseam: 29-1/2 to 32-1/2 in. Waist: 39 to 43 in. NSN No. NATO Size: 7583/9909
X-Large - Long Inseam: 32-1/2 to 35-1/2 in. Waist: 39 to 43 in. NSN No. NATO Size: 8390/9909	X-Large - X-Long Inseam: 35-1/2 to 38-1/2 in. Waist: 39 to 43 in. NSN No. NATO Size: 9098/9909	X-Large - XX-Long Inseam: 38-1/2 to 41-1/2 in. Waist: 39 to 43 in. NSN No. NATO Size: 9805/9909
XX-Large - X-Short Inseam: 23-1/2 to 26-1/2 in. Waist: 43 to 47 in. NSN No. NATO Size: 6067/0919	XX-Large – Short Inseam: 26-1/2 to 29-1/2 in. Waist: 43 to 47 in. NSN No. NATO Size: 6775/0919	XX-Large – Regular Inseam: 29-1/2 to 32-1/2 in. Waist: 43 to 47 in. NSN No. NATO Size: 7583/0919
XX-Large – Long Inseam: 32-1/2 to 35-1/2 in. Waist: 43 to 47 in. NSN No. NATO Size: 8390/0919	XX-Large - X- Long Inseam: 35-1/2 to 38-1/2 in. Waist: 43 to 47 in. NSN No. NATO Size: 9098/0919	XX-Large - XX-Long Inseam: 38-1/2 to 41-1/2 in. Waist: 43 to 47 in. NSN No. NATO Size: 9805/0919

TABLE IV.B. Style B. Female size label.

25 – X Short Waist: 25 to 28 in. Inseam: 24 to 26 in. NSN No. NATO Size: 6067/5869	28 – X Short Waist: 28 to 31 in. Inseam: 24 to 26 in. NSN No. NATO Size: 6067/6979	31 – X Short Waist: 31 to 35 in. Inseam: 24 to 26 in. NSN No. NATO Size: 6067/7989	35 – X Short Waist: 35 to 39 in. Inseam: 24 to 26 in. NSN No. NATO Size: 6067/8999
25 – Short Waist: 25 to 28 in. Inseam: 26 to 28 in. NSN No. NATO Size: 6775/5869	28 – Short Waist: 28 to 31 in. Inseam: 26 to 28 in. NSN No. NATO Size: 6775/6979	31 – Short Waist: 31to 35 in. Inseam: 26 to 28 in. NSN No. NATO Size: 6775/7989	35 – Short Waist: 35 to 39 in. Inseam: 26 to 28 in. NSN No. NATO Size: 6775/8999
25 – Regular Waist: 25 to 28 in. Inseam: 28 to 30 in. NSN No. NATO Size: 7583/5869	28 – Regular Waist: 28 to 31 in. Inseam: 28 to 30 in. NSN No. NATO Size: 7583/6979	31 – Regular Waist: 31 to 35 in. Inseam: 28 to 30 in. NSN No. NATO Size: 7583/7989	35 – Regular Waist: 35 to 39 in. Inseam: 28 to 30 in. NSN No. NATO Size: 7583/8999
----------	28 – Long Waist: 28 to 31 in. Inseam: 30 to 32 in. NSN No. NATO Size: 8390/6979	31 – Long Waist: 31 to 35 in. Inseam: 30 to 32 in. NSN No. NATO Size: 8390/7989	35 – Long Waist: 35 to 39 in. Inseam: 30 to 32 in. NSN No. NATO Size: 8390/8999

TABLE IV.B. Style B. Female size label. - Continued

----------	----------	31 – X Long Waist: 31 to 35 in. Inseam: 32 to 34 in. NSN No. NATO Size: 9098/7989	35 – X Long Waist: 35 to 39 in. Inseam: 32 to 34 in. NSN No. NATO Size: 9098/8999

3.8.2 Identification and care label (all types, styles and classes). The combination identification/ care label shall conform to Type VI, Class 15 of MIL-DTL-32075 and shall be placed on the inside of the right hip pocket (as worn), so that on the finished trousers the label shall face the wearer. The label shall be stitched on all four (4) sides. The stitching shall not cover the printing and shall not be visible on trousers front. The color of the combination identification and care label shall be white or approximate the ground shade of the basic fabric, 3.4.1 and 3.4.3. As an alternate, may use a stamp on the inside of hip pocket facing out. The color base of stamping shall be white with black letters.

3.8.2.1 Identification and care label, (Type I Trousers only, all styles and classes). The Type I label shall include the following information:

TEAM SOLDIER CERTIFIED GEAR U.S.ARMY

2/

Trousers, Advanced Combat Uniform - Unisex
or
Trousers, Advanced Combat Uniform – Female
Fiber Content:
Contractor Name:
Contract Number:
Lot Number 1/

USE AND CARE

PRIOR TO LAUNDERING: Empty pockets. Turn inside out. Pre-treat stains with commercially available pre-treatments.
HOME LAUNDERING: Use cold water detergent. Wash in cold water using permanent press cycle. Rinse in cold water. Tumble dry low.
WASHING BY HAND: Use cold water detergent. Wash in cold water. Rinse completely. Never twist or wring dry. Hang dry on a rust-proof hanger. Do not hang dry in direct sunlight.
NOTE: Wash garment separate from other garments. In military field operations, garment may be washed with other garments.

CAUTION:
DO NOT USE BLEACH, BLEACH ALTERNATIVES, FABRIC SOFTENER, OR STARCH.
DO NOT DRY CLEAN OR COMMERCIALLY HOT PRESS.

DO NOT REMOVE THIS LABEL

1/ Lot number shall be stamped with indelible black ink prior to shipment.
2/ NWU II and III uniforms shall not have the Army Team Soldier Seal (see 3.4.3)

3.8.2.2 Identification and care label, flame resistant (Type III Trousers only, all styles and classes). The label for Type III shall include the following information:

2/	Trousers, Advanced Combat Uniform - Unisex or Trousers, Advanced Combat Uniform – Female FLAME RESISTANT Fiber Content: Contractor Name: Contract Number: Lot Number 1/ This product meets the manufacturing and performance testing requirements as specified by the Program Executive Office – Soldier

USE AND CARE

PRIOR TO LAUNDERING: Empty pockets. Turn inside out. Pre-treat stains with commercially available pre-treatments.
HOME LAUNDERING: Use cold water detergent. Wash in cold water using permanent press cycle. Rinse in cold water. Tumble dry low.
WASHING BY HAND: Use cold water detergent. Wash in cold water. Rinse completely. Never twist or wring dry. Hang dry on a rust-proof hanger. Do not hang dry in direct sunlight.
NOTE: Wash garment separate from other garments. In military field operations, garment may be washed with other garments.

CAUTION:

DO NOT USE BLEACH, BLEACH ALTERNATIVES, FABRIC SOFTENER, OR STARCH.
DO NOT DRY CLEAN OR COMMERCIALLY HOT PRESS.

DO NOT REMOVE THIS LABEL
THIS GARMENT IS FLAME RESISTANT

1/ Lot number shall be stamped with indelible black ink prior to shipment.
2/ NWU II and III uniforms shall not have the Army Team Soldier Seal (see 3.4.3)

3.8.3 Insect repellent label (Class 2 and 3 only, all types and styles). The insect repellent label shall conform to MIL-PRF-32659 and shall be placed in the inside of the left hip pocket as worn, so that on the finished trousers label shall face the wearer. The label shall include both permanent insect repellent and brand labeling information; and shall comply with the approved EPA registration as specified in MIL-PRF-32659. The label shall be stitched on all four (4) sides. The stitching shall not cover the printing and shall not be visible on the trousers front. The color for the insect repellent label for Classes 2 and 3 and identification/care label shall be white or approximate the ground shade of the basic fabric, 3.4.1 and 3.4.3. As an alternate, may use a stamp on the inside of hip pocket facing out. The color base of stamping shall be white with black letters. The Class 2 and 3 insect repellent label shall be the approved EPA label (see example).

Insect Repellent Brand Name:
INSECT REPELLENT APPAREL
Refer to hangtag for more information

Trousers, Advanced Combat Uniform
Contractor Name:
EPA REG. NO.:
EPA EST. NO.:

- Do Not Dry Clean
- Dry Cleaning removes active ingredient
- Wash separate from other clothing
- In military field operations, garment may be washed with other garments.
- Do Not Re-treat
- Dispose of garment in trash in accordance with DoD regulations

Repels mosquitoes
Repellency remains effective for 50 washings

ACTIVE INGREDIENT **%W/W**
(Insert chemistry name)……..……..(Insert percentage)%
OTHER INGREDIENTS: (Garment)…….(Insert percentage)%
TOTAL……...100.00%

It is a violation of Federal Law to use this product in a manner inconsistent with its labeling

DO NOT REMOVE THIS LABEL

Insect repellent label (example) for Classes 2 and 3.

3.8.4 Hang tag, Mosquito bite protection (Class 2 and 3 only, all types and styles). Each Class 2 and Class 3 trousers shall have an individual paper tag attached to the garment conforming to MIL-PRF-32659. The color for the hang tag shall be white. The paper tag shall be Swift tacked in the side seam approximately 2-inches below the belt loop. The tag shall provide additional Mosquito bite protection information in accordance with and as required by EPA registration and labeling. The hang tag shall be the approved EPA hang tag (see example):

Insect Repellent Brand Name:
INSECT REPELLENT APPAREL
Contractor Name:
Contractor Address:
EPA REG. NO.:
EPA EST. NO.:

- Do Not Dry Clean
- Dry Cleaning removes active ingredient
- Wash separate from other clothing
- In military field operations, garment may be washed with other garments.
- Do Not Re-treat
- Dispose of garment in trash in accordance with DoD regulations
- For protection of exposed skin, use in conjunction with a repellent registered for direct application to the skin.

Repels mosquitoes
Repellency remains effective for 50 washings

ACTIVE INGREDIENT **%W/W**
(Insert chemistry name) …..…… .(Insert percentage)%
OTHER INGREDIENTS: (Garment)……. (Insert percentage)%
TOTAL…… 100.00%

It is a violation of Federal Law to use this product in a manner inconsistent with its labeling.

Retain hangtag for future reference on proper handling of this garment.

THIS TAG NOT TO BE REMOVED EXCEPT BY CUSTOMER

Insect repellent hang tag (example) for Classes 2 and 3.

3.8.5 Barcode hang tag (all types, styles and classes). Each pair of trousers shall have a white paper barcode hang tag conforming to Type VIII, Class 17 of MIL-DTL-32075. The hang tag shall be Swift tacked in the side seam approximately 2-inches below the belt loop and shall be completely visible on the trousers when it is folded and/or packaged as specified and so it causes no damage to the trousers. The bar coding element shall be a 13 digit National Stock Number (NSN). There shall be a 12 digit Universal Product Code (UPC) number assigned for all NSNs by the contracting activity. The initials "UPC" must appear beneath the code.

NOTE: The hang tag for insect protection and barcode may be applied jointly with the use of one (1) Swift tack.

3.9 Figures. Figures are furnished for informational purposes only. To the extent of any inconsistencies between the written document and the figure, the written document shall govern.

3.10 List of pattern parts. The Government shall furnish patterns, which show directional line markings for proper cutting and assembly and are to be used as a guide for cutting contractor's working patterns. The Government patterns provide a seam allowance of 1/2-inch for outseams, seat seams, and crotch seams, 1/4-inch allowance for hip pocket flaps and 3/8-inch allowance for all other seams, except where otherwise specified. Pockets, pocket flaps, knee patches, buttons, buttonholes, and bar-tacks shall be located in accordance with marks on patterns and table references. Minor modifications to the pattern are permitted where necessary to accommodate manufacture's processes to include garment treatments and use of automatic equipment. These modifications shall not alter the final design, serviceability, appearance, or final finished measurements. Table V.A and Table V.B pattern list is provided to ensure that the pattern set is complete for all types and styles of trousers (see 6.2).

TABLE V.A. Style A. Unisex list of pattern parts.

Material	**Nomenclature**	**Pattern Abbreviation**	**Cut Number**
Basic Material	Back	PD1405A-BACK	2
	Left Front	PD1405A-FRONT_LFT	1
	Right Front	PD1405A-FRONT_RT	1
	Left Fly	PD1405A-LEFT_FLY	3
	Right Fly Lining	PD1405A-RGT_FLY_LIN	1
	Knee Patch	PD1405A-KNEE_PATCH	2
	Seat Patch	PD1405A-SEAT_PATCH	2
	Side Hanging Pocket Bearer	PD1405A-SD_HG_PK_BR	2
	Side Hanging Pocket Facing	PD1405A-SD_HG_PK_FC	2
	Side Hanging Pocket	PD1405A-SD_HANG_PKT	2
	Cargo Pocket	PD1405A-CARGO_PKT	2
	Cargo Pocket Facing	PD1405A-CRG_PKT_FAC	2
	Cargo Pocket Flap	PD1405A-CG_PKT_FLP	2

TABLE V.A. Style A. Unisex list of pattern parts. – Continued

Material	Nomenclature	Pattern Abbreviation	Cut Number
Basic Material	Cargo Pocket Flap Tab	PD1405A-CG_PK_FLP_TB	2
	Waistband Lining	PD1405A-WAISTBAND_LN	1
	Lower Leg Pocket	PD1405A-LOLEG_PKT	2
	Lower Leg Pocket Flap	PD1405A-LOW_LEG_FLP	2
	Hip Pocket	PD1405A-HIP_POCKET	2
	Hip Pocket Bearer	PD1405A-HIP_PCKT_BR	2
	Hip Pocket Facing	PD1405A-HIP_PKT_FAC	2
	Hip Pocket Flap	PD1405A-HIP_PKT_FLP	2
Alternates	Hip Pocket Flap Tab	PD1405A-HP_PK_FL_TB	2
	Leg Eyelet	PD1405A-LEG_EYELET	2
	Back Alternate	PD1405A-BACK_ALT	2
	Left Front Alternate	PD1405A-FRT_LFT_ALT	1
	Right Front Alternate	PD1405A-FRNT_RT_ALT	1
	Left Fly Alternate	PD1405A-LFT_FLY_ALT	3
	Right Fly Lining Alternate	PD1405A-RT_FL_LNALT	1
	Waistband Alternate	PD1405A-WSTBAND_ALT	2
	Cargo Pocket Flap and Tab Alternate	PD1405A-C_P_F_T_ALT	2
	Hip Pocket Alternate	PD1405A-HIP_PKT_ALT	2
	Hip Pocket Flap and Tab Alternate	PD1405A-HPPKFLTB_AL	2
	Side Pocket Hanging Bearer Alternate	PD1405A-S_H_P_B_ALT	2
	Side Hanging Pocket Facing Alternate	PD1405A-S_H_P_F_ALT	2
	Side Hanging Pocket Alternate	PD1405A-SD_HGPK_ALT	2

TABLE V.B. Style B. Female list of pattern parts.

Material	Nomenclature	Pattern Abbreviation	Cut Number
Basic Material	Back	PD1405B-BACK	2
	Left Front	PD1405B-FRONT_LFT	1
	Right Front	PD1405B-FRONT_RT	1
	Left Fly	PD1405B-LEFT_FLY	3
	Right Fly Lining	PD1405B-RGT_FLY_LIN	1
	Knee Patch	PD1405B-KNEE_PATCH	2
	Seat Patch	PD1405B-SEAT_PATCH	2
	Side Hanging Pocket Bearer	PD1405B-SD_HG_PK_BR	2
	Side Hanging Pocket Facing	PD1405B-SD_HG_PK_FC	2

TABLE V.B. Style B. Female list of pattern parts. - Continued

Material	Nomenclature	Pattern Abbreviation	Cut Number
Basic Material	Side Hanging Pocket	PD1405B-SD_HANG_PKT	2
	Cargo Pocket	PD1405B-CARGO_PKT	2
	Cargo Pocket Facing	PD1405B-CRG_PKT_FAC	2
	Cargo Pocket Flap	PD1405B-CG_PKT_FLP	2
	Cargo Pocket Flap Tab	PD1405B-CG_PK_FLP_TB	2
	Waistband Lining 1/	PD1405B-WAISTBAND_LN	2
	Lower Leg Pocket	PD1405B-LOLEG_PKT	2
	Lower Leg Pocket Flap	PD1405B-LOW_LEG_FLP	2
	Hip Pocket	PD1405B-HIP_POCKET	2
	Hip Pocket Bearer	PD1405B-HIP_PCKT_BR	2
	Hip Pocket Facing	PD1405B-HIP_PKT_FAC	2
	Hip Pocket Flap	PD1405B-HIP_PKT_FLP	2
	Hip Pocket Flap Tab	PD1405B-HP_PK_FL_TB	2
	Leg Eyelet	PD1405B-LEG_EYELET	2
Alternates	Back Alternate	PD1405B-BACK_ALT	2
	Left Front Alternate	PD1405B-FRT_LFT_ALT	1
	Right Front Alternate	PD1405B-FRNT_RT_ALT	1
	Left Fly Alternate	PD1405B-LFT_FLY_ALT	3
	Right Fly Lining Alternate	PD1405B-RT_FL_LNALT	1
	Waistband Alternate 2/	PD1405B-WSTBAND_ALT-	2
	Cargo Pocket Flap and Tab Alternate	PD1405B-C_P_F_T_ALT	2
	Hip Pocket Alternate	PD1405B-HIP_PKT_ALT	2
	Hip Pocket Flap and Tab Alternate	PD1405B-HPPKFLTB_AL	2
	Side Pocket Hanging Bearer Alternate	PD1405B-S_H_P_B_ALT	2
	Side Hanging Pocket Facing Alternate	PD1405B-S_H_P_F_ALT	2
	Side Hanging Pocket Alternate	PD1405B-SD_HGPK_ALT	2

1/ Waistband pattern will be prepared by contractor in accordance with requirements indicated in section 3.7.2.
2/ Waistband and lining are cut from same pattern. If waistband and lining are strip cut and put on rolls, disregard these pattern parts.

3.11 Configuration. Each pair of trousers shall conform to design, appearance (see figures 1-6), the finished measurements in Tables VIII.A and VIII.B and the construction methods specified in 3.11.1 through 3.11.3 and Tables VI and VII in order to maintain configuration compliance.

3.11.1 Seams and stitching. All seams shall be consistent and exhibit a uniform appearance and conform to the ASTM D6193 seam and stitch types listed in Table VI. The backside of seams (inside garment) shall be flat with no protruding seam allowance to create irritation or discomfort. All material edges shall be clean finished: turned-in, turned-under, or serged, unless otherwise indicated. The garment shall have no raw edges including inside pockets. Needle and bobbin thread tension shall be balanced such that neither is too tight nor too loose relative to each other. The seams for all outside visible stitching shall be sewn with 11 (± 1) stitches per inch. Overedge or pre-hemming shall be 10 (± 2) stitches per inch. Buttons shall be attached with 16 (± 1) stitches per button. Buttonholes shall be 54 (± 2) stitches per inch including tack. The sewn eyelets for the bellows pockets shall have a minimum of 16 stitches. The width of the bight of stitching shall not be less than 1/16-inch. The eyelet stitching shall have at least four (4) overlapping stitches with the purling on the outside. All stitches per inch and gauges shall be met prior to any applicable garment treatments.

3.11.1.1 Repair of stitch.

3.11.1.2 Repairs of stitching. Repairs of stitching shall be as follows:

a. When thread breaks or bobbin run-outs occur during stitching, the stitching shall be repaired by restarting the stitching a minimum of 1/2-inch in back of the end of the stitching.

b. Thread breaks or two (2) or more consecutive skipped or run-off stitches noted during end item inspection shall be repaired by overstitching. The stitching shall start at a minimum of 1/2-inch in back of the defective area and continue a minimum of 1/2-inch beyond the defective area onto the existing stitching. Loose or excessively tight stitching shall be repaired by removing the defective stitching, without damaging the materials, and restitching in the required manner.

NOTE. When making the above repairs, the ends of the stitching are not required to be backstitched. The loose ends shall be trimmed with scissors. Caution: Pulling or breaking the loose ends is not allowed.

3.11.1.3 Repairs of type 401 stitching only. All repairs shall be in accordance with 3.11.1.1 and 3.11.1.2, except substitute 3/4-inch for 1/2-inch wherever 1/2-inch appears. Repairs to stitch Type 401 may be accomplished by use of stitching Type 301.

3.11.2 Fly seaming and stitching. The fly construction stitching of front center crotch seam shall end at J-stitch. There shall be a horizontal bar-tack superimposed on the bottom point of the J-stitch (see figures 6A and 6B).

TABLE VI. Seam and stitching types.

Seam placement	Seam type	Gauge	Stitch type
Side seams, back seam and inseam	LSc-2 or Ssa2-2 and LSq-3	3/16 to 9/32-inch gauge (double lap seam)	301 or 401
Top stitching of side pockets	OSf-1	3/16 to 1/4-inch from edge	301
Attachment of pockets	LSd-1	1/16 to 1/8-inch from edge and 1/4-inch gauge	301
Raw edges of pocket flaps, pocket bagging, bearer or facings	SSa-2	1/4 to 3/8-inch gauge	516, 519
FR identification marker to left cargo pocket flap (Type III only)	LSbj-1	Box stitch 7/8-inch by 7/8-inch	301
Setting of cargo and lower leg pocket flaps:	Ssa-1	3/16 to 5/16-inches from edge	502,503 or 504
Top stitching of cargo and lower leg pocket flaps	OSF-1	3/16 to 1/4-inch from folded edge	301
Top stitch OR Top stitch	Sba-2 LSb1-2	Two (2) rows 3/16 to 1/4-inch apart 3/16 to 1/4-inch from serged edge, then turn flap burying raw edge and top stitch one (1) row 1/4 to 5/16-inches from turned edge	301 301
Cargo and lower leg pocket bellows, pleats edge stitch all	OSf-1	1/16 to 1/8-inch from edge	301
Cargo Pocket Facing	LSk-2	1/16 to 1/8-inch from top and bottom edge of cargo pocket facing	301
Attachment of knee reinforcements	LSd-2	Two (2) rows 3/16 to 1/4-inch apart	301
Bottom hemming	Efb-1	3/4 to 1-inch wide hem	301
Belt loops	Efh-1	1/4-inch gauge between needle	402 or 406
Waistband attachment options (Style A, Unisex): Grown-on lining attachment Top stitch OR Sewn-on 1-piece	LSct-2 LSct-3 BSo-2	1/16 to 1/8-inch from top and bottom edge of waistband lining Along top edge 1/16 to 1/8-inch from top and bottom edge of waistband	301 or 401 301 or 401 301 or 401

TABLE VI. Seam and stitching types. - Continued

Seam placement	Seam type	Gauge	Stitch type
Waistband attachment options (Style A, Unisex): - Continued			
Top stitch	BSo-3	Along top edge	301 or 401
OR			
Sewn-on 2-piece	LSbc-2	1/16 to 1/8-inch from top and bottom edge of waistband	301 or 401
Elastic Waistband (Style B, Female only): Metered elastic 1/, 2/	LSbc-4	Two (2) rows 3/16 to 1/4-inch apart 1/8-inch from edge	301 or 401
Seat patch	LSd-2	Two (2) rows 3/16 to 1/4-inch apart. First row of stitching shall be 1/16 to 1/8-inch from folded edge	301
Buttonhole fly – join pieces along front edge; turned in edge	SSe-2 or SSc-1	1/16 to 1/8-inch from turned in edge	301
Join left front and left fly lining along front edge; turned in edge	SSe-2 or SSc-1	1/16 to 1/8-inch from turned in edge	301
Overedge back edges of left fly lining and buttonhole fly	EFd-1	3/16 to 1/4-inch gauge	502, 503 or 504
J-stitch	LSbj-1	2 (± 1/8)-inch from edge	301
Join right front and right fly lining along front edge	SSe-2 or SSc-1	1/16 to 1/8-inch from turned in edge	301
Overedge right fly raw edges	EFd-1	3/16 to 1/4-inch gauge	502, 503 or 504
Crotch seam	LSb-2	Two rows 3/16 to 1/4-inch apart. Stitching shall penetrate both crotch pattern pieces. Stitching shall end 2-3/4 to 3-inches from inseam.	301
Hip pocket welt	SSbe-2	Hip pocket welt width 1/4 - 3/8 inch	301
Labels	LSbj-1	1/8 to 3/16-inch from edge	301

1/ Style B elastic: Elastic strips shall be sewn and be caught within interior of seam via all four (4) topstitching's. Inserted elastic shall be capable of meeting the finished measurements in 3.12.1 and Table VIIIB. All stitch lines shall be correctly tensioned and balanced such that the stitch lines shall not impede stretch causing stitches break open or exceed the elastic stretch causing elastic to bear all the stress. Both the stitch line and elastic shall equally share the stress when stretched out.
2/ An alternate waistband construction shall use 1-1/2 (±) 1/16-inch elastic metered its entire length using seam type LSbc-4 with the elastic inserted within the seam construction along opposite sides of the waistband per pattern placement. A total of four (4) stitch lines shall be correctly tensioned or balanced such that the stitch lines do not impeded stretch whereby stitches

could break open. The alternate waistband does not require bar-tacks at each end of the elastic. The alternate waistband shall meet elastic webbing, elongation and force specified in 3.6.2 and finished dimensions specified in 3.12.1 and 3.7.2, Table VIII.B.

3.11.3 Bar-tacking. To maintain garment durability and functionality, bar-tacks shall be placed as specified in Table VII. Bar-tacks shall be 1/8 to 3/16-inch wide.

TABLE VII. Bar-tack placement.

Bar-tack placement	**Size of tack (inches)**	**Stitches per tack 1/**	**# of Bar-tacks per garment**	**Horizontal**	**Vertical**
Elastic Waist Band, Style B (1/2-inch from each cut end of elastic webbing)					
a. Left	1	55	2	----	X
b. Right	1	55	2	----	X
Belt loops (set 1/8-inch from top and bottom edge)					
a.Top	1/2	30	7	X	----
b. Bottom	1/2	30	7	X	----
Center back of leg bottom hems, securing lace (line tack also permitted)	5/8	36	2	----	X
Fly (see figures 6A and 6B) J-stitching, superimposed on outside bottom point (through all layers)	5/8	36	1	X	----
Positioned approximately 1/4-inch from bottom right edge and 1/2-inch from front right edge (through all fly layers not visible from front)	5/8	36	1	----	X 2/
Fly - left front lining Between the second and third buttonholes	5/8	36	1	X	----
Between the third and fourth buttonholes (not visible from front)	5/8	36	1	X	----
Crotch/inseam junction, positioned on seam through center of crotch seam	5/8	36	1	X	----
Crotch centered between crotch junction and fly front J-stitch	5/8	36	1	----	X

TABLE VII. Bar-tack placement. - Continued

Bar-tack placement	Size of tack (inches)	Stitches per tack 1/	# of Bar-tacks per garment	Horizontal	Vertical
Cargo pockets					
Top, (left and right side)	3/4	48	4	----	X
Bottom, (bellow side)	3/4	48	2	----	X
Cargo pocket pleats (on facing stitching)	5/8	36	4	X	----
Lower leg pockets					
Top (left and right side)	5/8	36	4	----	X
Lower, right (opposite side of bellows)	5/8	36	2	----	X
Cargo and lower leg pocket flaps					
a. Cargo	5/8	36	4	X	----
b. Lower leg	5/8	36	4	X	----
Back hip pockets (at welt ends along stitch line)	5/8	36	4	----	X
Front hanging pocket openings, (meeting or overlapping pocket edge)					
Top opening, 1/4 - 3/8-inch below waistband	5/8	36	2	X	----
Bottom opening, perpendicular to front edge	5/8	36	2	X	----
Front and Back Hanging Pockets					
a. At bottom of pocket 3/8-inch from edge	3/8	28	2	----	X
b. At each end of pockets (To reinforce bottom (2 per pocket)	3/8	28	4	X	----

1/ The tolerance shall be (± 2) stitches per tack.
2/ Bar-tack can be angled

3.12 Measurements. All measurements referenced in this document, except for end item measurements specified in 3.12.1 shall be made prior to garment treatment if applicable.

3.12.1 Finished measurements (Style A and B, all types and classes). The trousers shall conform to the finished measurements specified in Table VIII.A and Table VIII.B.

TABLE VIII.A. Style A. Unisex finished measurements (inches) all types and classes.

Size	X-Small	Small	Medium	Large	X-Large	XX-Large	Tol.
Half Waist, 1/	13-3/4	15-3/4	17-3/4	19-3/4	21-3/4	23-3/4	± 1/2
Inseam, 2/							
X-Short	28-3/8	28-3/8	28-3/8	28-3/8	28-3/8	28-3/8	
Short	30-3/8	30-3/8	30-3/8	30-3/8	30-3/8	30-3/8	
Regular	32-3/8	32-3/8	32-3/8	32-3/8	32-3/8	32-3/8	± 3/4
Long	34-3/8	34-3/8	34-3/8	34-3/8	34-3/8	34-3/8	
X-Long	36-3/8	36-3/8	36-3/8	36-3/8	36-3/8	36-3/8	
XX-Long	38-3/8	38-3/8	38-3/8	38-3/8	38-3/8	38-3/8	
Outseam, 3/							
X-Short	37-3/8	37-7/8	38-3/8	38-7/8	39-3/8	39-7/8	
Short	39-7/8	40-3/8	40-7/8	41-3/8	41-7/8	42-3/8	
Regular	42-3/8	42-7/8	43-3/8	43-7/8	44-3/8	44-7/8	± 3/4
Long	44-7/8	45-3/8	45-7/8	46-3/8	46-7/8	47-3/8	
X-Long	47-3/8	47-7/8	48-3/8	48-7/8	49-3/8	49-7/8	
XX-Long	49-7/8	50-3/8	50-7/8	51-3/8	51-7/8	52-3/8	
Half Leg Opening, 4/							
X-Short	8-1/2	8-1/2	8-7/8	8-7/8	9-1/4	9-1/4	
Short	8-1/2	8-1/2	8-7/8	8-7/8	9-1/4	9-1/4	± 1/2
Regular	8-1/2	8-1/2	8-7/8	8-7/8	9-1/4	9-1/4	
Long	8-1/2	8-1/2	8-7/8	8-7/8	9-1/4	9-1/4	
X-Long	8-1/2	8-1/2	8-7/8	8-7/8	9-1/4	9-1/4	
XX-Long	8-1/2	8-1/2	8-7/8	8-7/8	9-1/4	9-1/4	

1/, 2/, 3/, 4/ - See 3.12.1.1 for methods of measurement.

THIS SPACE LEFT INTENTIONALLY BLANK

TABLE VIII.B. Style B. Female finished measurements (inches) all types and classes.

Size	25	28	31	35	Tol.
Half Waist, 1/	13	14-1/2	16	18	± 1/2
Inseam, 2/					
X-Short	26	26	26	26	
Short	28	28	28	28	
Regular	30	30	30	30	± 3/4
Long	32	32	32	32	
X-Long	34	34	34	34	
Outseam, 3/					
X-Short	34	34-1/2	35	35-1/2	
Short	36-1/2	37	37-1/2	38	
Regular	39	39-1/2	40	40-1/2	± 3/4
Long	41-1/2	42	42-1/2	43	
X-Long	44	44-1/2	45	45-1/2	
Half Leg Opening, 4/					
X-Short	8-3/4	8-3/4	9	9-1/4	
Short	8-3/4	8-3/4	9	9-1/4	
Regular	8-3/4	8-3/4	9	9-1/4	±1/2
Long	8-3/4	8-3/4	9	9-1/4	
X-Long	8-3/4	8-3/4	9	9-1/4	
Half Waist, 5/ **Stretched (minimum)**	15	16-1/2	18	20	- 0, + 1
Half Hip 6/	20-3/4	22-1/4	23-1/4	25-1/4	±1/2

1/, 2/, 3/, 4/, 5/, 6/ - See 3.12.1.1 for methods of measurement.

3.12.1.1 Methods of measurement. The measurements in Table VIII.A and Table VIII.B shall be taken in accordance with the footnotes listed below Table VIII.B and the trousers waist shall be buttoned and placed flat upon a table for measuring.

1/ Half waist - Measure along center of waistband from outside folded edge to folded edge. The elastic inserts for Style B, shall be relaxed.
2/ Inseam - Measure inseam of the trousers from center of crotch seam to bottom edge of the trousers along the inseam.
3/ Outseam - Measure from top edge of waistband to bottom of leg along outseam.
4/ Half leg opening - Measure across bottom of leg from outside folded edge to folded edge.
5/ Half waist stretched - Rotate 1/2-waist so that elastic is in the approximate center to prevent the hands or stretching device from restricting the elastic from fully elongating. Stretch waist until fully extended without excessive force, measure along center of waistband from outside folded edge to folded edge.
6/ Half hip - With the trousers laid flat on table, Seat Patch facing up, measure 9-inches down from top edge of waistband at center back, measure seam edge to seam edge.

3.13 Toxicity. Unless otherwise specified in the contract or procurement documents, the finished trousers shall not present a health hazard and shall show compatibility with prolonged, direct skin contact when tested as specified in 4.5.1.

3.14 Workmanship. After completion of the final assembly, the trousers shall be thoroughly cleaned and all thread scraps, lint and foreign matter shall be removed, and all pocket flap closures and waistband closures engaged prior to insect repellent treatment. The trousers shall be uniform in quality and shall be free from irregularities or defects which could adversely affect fit, performance, reliability, or durability. The trousers shall conform to the quality established by this specification.

4. VERIFICATION

4.1 Classification of inspection. The inspection requirements specified herein are classified as follows:

First article inspection (see 4.2).
Conformance inspection (see 4.3).

4.2 First article inspection. First article, submitted in accordance with 3.1.1, shall be inspected for compliance with design, materials, construction, toxicity, and workmanship. In addition, the first article inspection shall be examined for compliance with the dimensional requirements as specified in 3.12.1 and tested for the characteristics as specified in 4.4.2 and end item testing defined in 4.4.3. The presence of excessive defects, as defined in the contract or purchase order, or failure to pass any test shall be cause for rejection of the first article. The sample size shall be specified in the procurement document (see 6.2). The sample unit shall be one (1) pair of trousers, and the lot size shall be expressed in units of trousers.

4.3 Conformance inspection. Conformance inspection shall include examination to meet the dimensional requirements as specified in 3.12.1, visual inspection to meet the requirements 4.4.1, and verification testing defined in 4.4.2 and end item testing defined in 4.4.3. Sampling for inspection shall be performed in accordance with ASQ/ANSI Z1.4, as defined by contract, except where otherwise indicated.

4.4 Component and end item inspections. In accordance with 4.3, components and end items shall be tested in accordance with all the requirements of referenced documents unless otherwise excluded, amended, modified, or qualified in this document or applicable procurement documents. The Government reserves the right to inspect and test all components and end items to determine conformance to requirements.

4.4.1 End item visual examination. Each pair of trousers shall be subjected to visual examination. All fabric and garment defects shall be scored in accordance with Table IX, which are clearly noticeable at normal viewing distance (3-feet) and affect serviceability and appearance of the garment. Material defects are defined in ASTM D3990. If needed, closer inspection will be performed to verify compliance to specification requirements.

TABLE IX. Trousers visual examination.

Examination	Defect	Classification	
		Major	Minor
Material	Incorrect, not as specified (see 3.4.1, 3.4.3 and 3.4.5)	101	
	Hole, cut, tear, smash, burn, needle chew, exposed drill hole, run, thin place, dye streak, color not as specified, misweave, visible mend or otherwise damaged	102	
	Knots greater than Fabric Defect Scale Level C (See 6.8)		201
	Slubs greater than Fabric Defect Scale Level D (See 6.8)		202
Shade	Shade variation within part or between parts of the trousers, affecting appearance or serviceability	103	
Components	Component not in accordance to the specification	104	
Tape and elastic webbing	Omitted or misplaced	105	
	Any tape or webbing distorted, full, tight, damaged or twisted		203
	Color or type not as specified		204
	Curling at the elastic (Style B only)	106	
Thread and gimp	Color or type not as specified		205
Buttons	Omitted, damaged or ragged	107	
	Not specified type, size or color		206
Patch kit (Class 3 of MIL-PRF 32635 only)	Omitted	108	
	Not placed in correct pocket or position		207
	Patch color, type or packaging not as specified		208
Labels, hangtags, bar code, UPC/HRI codes	Omitted, illegible	109	
	Color or type not as specified		209
	Human readable interpretation (HRI) illegible	110	
Construction	Any construction part of the trousers omitted (3.7.1 to 3.7.12)	111	
Waistband	Incorrect design, not as specified in patterns, not secured, not specified width	112	
	Waistband grainlines not matching to the trousers	113	
	Waistband button/buttonhole alignment uneven by more than 1/4-inch when buttoned	114	
Belt loops	Belt loops omitted, not secured, not specified size, opening not as specified or incorrect placement	115	
	Underside edge exposed more than 1/16-inch		210
Fly	Incorrect design not specified in patterns, not secured, missing or skewed J stitch line	116	
Seat and knee Reinforcement	Omitted	117	
	Not attached as specified,	118	
	Not aligned at top more than 1/4-inch (seat only)	119	

TABLE IX. Trousers visual examination. – Continued

Examination	Defect	Classification	
		Major	Minor
Pocket and flaps (all)	Pocket construction and openings not as specified	120	
	Pocket companions and openings not uniform in size or shape by 1/4-inch	121	
	Pocket flaps or openings not as specified	122	
	Pocket flaps twisted, curled or puckered, not stitched as specified or not well formed	123	
	Pocket flaps not completely covering pocket opening left to right, positioned or grain line not as specified	124	
	Pocket flap finished uneven from left to right more than 1/4-inch	125	
Front hanging side pockets	Raw edge not overedged	126	
Hip pocket	Omitted, or incorrect size	127	
	Missing or incorrect placement of buttons or buttonholes	128	
Cargo pockets	Omitted or incorrect size	129	
	Missing edge stitch on pleats, missing or incorrect placement of eyelets, buttons or buttonholes	130	
Lower leg pockets	Omitted or incorrect size	131	
	Missing or incorrect placement of eyelets, buttons or buttonholes	132	
Hem/bottom opening/inseam and outseam	Hem not as specified, or missing drawstring	133	
	Bottom openings varying more than 1/2-inch in width	134	
	Inseam and outseam lengths varying by more than 1/2-inch	135	
Eyelets	Omitted, misplaced or incorrect size	136	
	Loose stitching, incorrect number of stitches		211
	Eyelet hole not cut through		212
Bar-tacks, back-tacks	Omitted, misplaced or incorrect size	137	
	Loose stitching, incorrect number of stitches		213
Buttonholes	Omitted, misplaced or incorrect size	138	
	Buttonholes not in specified direction		214
	Loose buttonhole thread, purling on wrong side, not clean cut or securely caught in fabric	139	
	Alignment of buttonholes and buttons causing bulge, twist or distortion when engaged	140	
	Buttonholes not cleanly cut to required opening size		215
FR marker tape (Type III only)	Omitted, incorrect type or incorrectly placed	141	

TABLE IX. Trousers visual examination. – Continued

Examination	Defect	Classification	
		Major	Minor
Labels, Hangtags, UPC/HRI codes	Size, combination identification/care labels not placed correctly		216
	Hangtags/UPC labels not placed securely attached in correct position		217
	Barcode/UPC code not visible on folded, packaged item		218
	Any label or tag having incorrect printed content	142	
	Any label, hangtag, or barcode attachment causing damage to item	143	
Seams and stitching	Open seams, puckered, distorted, wavy, twisted, or irregular	144	
	Loose or tight stitch tension		
	Less than 1/2-inch in length		219
	Greater than 1/2-inch in length	145	
	Missing stitches greater than1/4-inch length		220
	Edge or raised stitching sewn too close to the edge or needle chew resulting in damage to fabric over 1/4-inch in length	146	
	Seam allowance not as required by stitch type		221
	Visible raw edge on outside of the trousers (inside raw edge greater than 1-inch)	147	
	Stitching not as specified	148	
	Double needle intersecting seams staggered by more than 1/4-inch	149	
	Run off of stitching more than 1/2-inch for edge or raised stitching	150	
	Stitching caught in components or fabric causing unwanted permanent folds, pleats or fullness in the garment	151	
	Free floating stitching not secured in a seam or other stitching by less than 1/4-inch or ends of a continuous line of stitching not overlapped over 1/2-inch (except label stitching)	152	
	Stitching of seams incorrectly repaired	153	
	Missing stitches less than 1/4-inch length		222
Cleanness and workmanship	Spot/Stain affecting appearance or serviceability	154	
	Odor	155	
	Excessive thread ends (more than 3) Between 1/4 to 1-1/2-inch		223
	Excessive thread ends (more than 3) Over 1-1/2-inches	156	
	All closures on the trousers not engaged		224
	Internal repair tags or tickets not removed from finished garment		225
Packaging	Any pair of trousers not packaged in accordance with contract or purchase order		226

4.4.2 Component testing. The components shall be tested for the characteristics listed in Table X. The methods of test shall be as specified in Table X. All test reports shall contain the individual values utilized in expressing the final results. The testing requirements and test sampling plan shall be as specified in the contract or purchase order.

TABLE X. Component tests (all types, styles and classes).

Characteristic	Requirement paragraph	Test method
Alternate pocketing material:		
Weight	3.4.5.1	ASTM D3776/D3776M (Method C)
Breaking strength Warp Filling	3.4.5.1	ASTM D5034 (G-E or G-T)
Tearing strength Dry	3.4.5.1	ASTM D1424 1/
Dimensional stability After laundering (5 cycles)	3.4.5.1	AATCC TM135 2/
Colorfastness to: Laundering (after 1 cycle) (Color change and Staining) Crocking (wet & dry), solids Perspiration (Color change and Staining)	3.4.5.1	AATCC TM61 3A 3/, AATCC TM8 4/ AATCC TM15 3/
Flame resistance Initial After 25 launderings	3.4.5.1 and Table I.A	5/ ASTM D6413/D6413M AATCC TM135, 2/ & ASTM D6413/D6413M
Elastic waistband (Style B only):		
Force vs. Elongation	3.6.2	4.4.2.1

1/ Dry condition in accordance with ASTM D1424, Section 9.1
2/ Launder in accordance with AATCC TM135 3,V, Aiii
3/ Rated using the AATCC EP1 and AATCC EP2.
4/ Rated using the AATCC EP8.
5/ First Article Testing only

4.4.2.1 Force versus elongation of elasticized features.

4.4.2.1.1 Specimen preparation. A waistband sample shall be constructed to duplicate the configuration of the waistband in the finished garment. A specimen shall consist of one (1) side of the elasticized waistband feature. Waistband specimen shall be laundered five (5) times in accordance with AATCC TM96, VIcA and ensure stitching which sets the elastic stays secured through the washings. Tensile properties are evaluated by conducting tensile tests utilizing equipment, which conform to ASTM D76/D76M, Standard Specification of Tensile Testing Machines for Textiles. Specimen is conditioned in accordance with ASTM D1776/D1776M for approximately 24 hours.

4.4.2.1.2 Procedure. The specimen is clamped in pneumatic jaws in a relaxed state (no force on read out) where the jaws are spaced 4-inches apart. A Constant Rate of Extension (CRE) with a loading rate of 2-inches per minute is used. The crosshead is moved 1.5-inches for a total of 5.5-inches. The resulting force is recorded at a rate of 10 points per second. The graph shall be evaluated to record the force at 1-1/2-inch extension (10 repetitions). The sample meets requirements when the 1-1/2-inch extension does not exceed 4.0 pounds nor is less than 1.5 pounds.

4.4.3 End item testing. The finished trousers or material shall be tested for the characteristics listed in Table XI. The methods of test shall be as specified in Table XI. All test reports shall contain the individual values utilized in expressing the final results. The testing requirements and test sampling plan shall be as specified in the contract or purchase order.

TABLE XI. End item testing (all types, styles, and classes).

Characteristic	**Requirement paragraph**	**Test method**
% Mosquito bite protection (Class 2 and 3 only)	3.5.1	MIL-PRF-32659
Insect repellent content (Class 2 & 3 only)	3.5.2	MIL-PRF-32659
pH (Class 2 & 3 only)	3.5.3	AATCC TM81
Button pull/break (Class 2 and 3 prior to treatment)	3.6.4	ASTM D5034
Toxicity	3.13	4.5.1
Flash fire (Predicted Burn Injury), percent (max.) With head Without head	3.4.3.1 and Table I	ASTM F1930 1/, 2/

1/ First Article Testing only
2/ Finished Trousers (Type III only) shall be tested as specified in ASTM F1930 using a 4-second flame exposure. For testing, the instrumented manikin shall be dressed in 100 percent cotton tee shirt and briefs and flame resistant blouses provided by U.S. Army Combat Capabilities Development Command Soldier Center as well as the trousers to be tested. Predicted percent body burn results shall be calculated with the assumption that the head/neck sensors shall not be considered. Average predicted body burn for six (6) samples shall not exceed 28 percent excluding the head sensors.

4.5 Methods of inspection.

4.5.1 Toxicity test. When the toxicity requirement (see 3.13) can be demonstrated with historical use data on the finishing treatments used, toxicity testing may not be required (see 6.6 and 6.7).

5. PACKAGING

5.1 Packaging. For acquisition purposes, the packaging requirements shall be as specified in the contract or order (see 6.2). When packaging of material is to be performed by DoD or

in-house personnel, these personnel need to contact the responsible packaging activity to ascertain packaging requirements. Packaging requirements are maintained by the Inventory Control Point's packaging activities within the Military Service or Defense Agency, or within the military service's system command. Packaging data retrieval is available from the managing Military Department's or Defense Agency's automated packaging files, CD-ROM products, or by contacting the responsible packaging activity.

5.2 Insect repellent packaging (Class 2 and 3 only). Every roll/box containing insect repellent treated fabric/uniforms must be labeled according to MIL-PRF-32659.

6. NOTES

(This section contains information of a general or explanatory nature that may be helpful but is not mandatory.)

6.1 Intended use. The trousers are for wear by military personnel as a combat uniform in garrison and combat missions.

6.2 Acquisition requirements. Acquisition documents should specify the following:

a. Title, number and date of this specification.
b. Type, style, class and sizes required (see 1.2).
c. The specific issue of individual documents referenced (see 2.2).
d. When first article sample is required (see 3.1.1, 4.2 and 6.3).
e. Camouflage pattern required (see 3.4.1 - 3.4.3).
f. Target dose levels based on active ingredient for vector protection (3.5.1and 3.5.2).
g. Pattern required (see 3.10).
h. When toxicity testing is required (see 3.13 and 4.5.1).
i. Conformance inspection acceptance quality limits (see 4.3).
j. Inspection conditions (see 4.4).
k. Packaging requirements (see 5.1 and 5.2).

6.3 First article. When a first article is required, it shall be inspected and approved under the appropriate provisions of FAR 52.209-4. The first article should be a pre-production sample. The contracting officer should specify the appropriate type of first article and the number of units to be furnished. The contracting officer should include specific instructions in all acquisition documents regarding arrangements for selection, inspection and approval of the first article.

6.4 Standard sample. For access to samples and pattern drawings, address the contracting activity issuing the invitation for bids or request for proposal.

6.5 Pattern guide factors & measurement tables. Measurements in tables in 6.5.1 - 6.5.2.2 are dimensional measurements using the given stretch factor.

6.5.1 Stretch factor (Type I only). Length (X) x Width (Y) axis, 2.0% x 1.5%.

6.5.1.1 Style A. Unisex, Type I only stretch factor.

TABLE XII. Style A. Unisex, Type I only.

Size	X-Small	Small	Medium	Large	X-Large	XX-Large	Tol.
Half Waist, 1/	14	16	18	20	22	24	± 1/2
Inseam, 2/							
X-Short	29	29	29	29	29	29	
Short	31	31	31	31	31	31	
Regular	33	33	33	33	33	33	± 3/4
Long	35	35	35	35	35	35	
X-Long	37	37	37	37	37	37	
XX-Long	39	39	39	39	39	39	
Outseam, 3/							
X-Short	38-1/2	39	39-1/2	40	40-1/2	41	
Short	41	41-1/2	42	42-1/2	43	43-1/2	
Regular	43-1/2	44	44-1/2	45	45-1/2	46	
Long	46	46-1/2	47	47-1/2	48	48-1/2	± 3/4
X-Long	48-1/2	49	49-1/2	50	50-1/2	51	
XX-Long	51	51-1/2	52	52-1/2	53	53-1/2	
Half Leg Opening 4/							
X-Short	8-5/8	8-5/8	9	9	9-3/8	9-3/8	
Short	8-5/8	8-5/8	9	9	9-3/8	9-3/8	±1/2
Regular	8-5/8	8-5/8	9	9	9-3/8	9-3/8	
Long	8-5/8	8-5/8	9	9	9-3/8	9-3/8	
X-Long	8-5/8	8-5/8	9	9	9-3/8	9-3/8	
XX-Long	8-5/8	8-5/8	9	9	9-3/8	9-3/8	

1/, 2/, 3/, 4/ see 3.12.1.1 for methods of measurement.

THIS SPACE LEFT INTENTIONALLY BLANK

6.5.1.2 Style B. Female, Type I only stretch factor.

TABLE XIII. Style B. Female, Type I only.

Size	25	28	31	35	Tol.
Half Waist, 1/	13-1/4	14-3/4	16-1/4	18-1/4	± 1/2
Inseam, 2/					
X-Short	26-5/8	26-5/8	26-5/8	26-5/8	
Short	28-5/8	28-5/8	28-5/8	28-5/8	
Regular	30-5/8	30-5/8	30-5/8	30-5/8	± 3/4
Long	32-5/8	32-5/8	32-5/8	32-5/8	
X-Long	34-5/8	34-5/8	34-5/8	34-5/8	
Outseam, 3/					
X-Short	34-7/8	35-3/8	35-7/8	36-3/8	
Short	37-3/8	37-7/8	38-3/8	38-7/8	
Regular	39-7/8	40-3/8	40-7/8	41-3/8	± 3/4
Long	42-3/8	42-7/8	43-3/8	43-7/8	
X-Long	44-7/8	45-3/8	45-7/8	46-3/8	
1/2 Leg Opening, 4/					
X-Short	8-7/8	8-7/8	9-1/8	9-3/8	
Short	8-7/8	8-7/8	9-1/8	9-3/8	± 1/2
Regular	8-7/8	8-7/8	9-1/8	9-3/8	
Long	8-7/8	8-7/8	9-1/8	9-3/8	
X-Long	8-7/8	8-7/8	9-1/8	9-3/8	
Half Waist, 5/ **Stretched (minimum)**	15-1/4	16-3/4	18-1/4	20-1/4	- 0, + 1
Half Hip 6/	21-1/8	22-5/8	23-5/8	25-5/8	± 1/2

1/, 2/, 3/, 4/, 5/, 6/ see 3.12.1.1 for methods of measurement.

THIS SPACE LEFT INTENTIONALLY BLANK

6.5.2 Stretch factor (Type III only). Length (X) x Width (Y) axis, 3.0% x 1.5%.

6.5.2.1 Style A. Unisex, Type III only stretch factor.

TABLE XIV. Style A. Unisex, Type III only.

Size	X-Small	Small	Medium	Large	X-Large	XX-Large	Tol.
Half Waist, 1/	14	16	18	20	22	24	± 1/2
Inseam, 2/							
X-Short	29-3/8	29-3/8	29-3/8	29-3/8	29-3/8	29-3/8	
Short	31-3/8	31-3/8	31-3/8	31-3/8	31-3/8	31-3/8	
Regular	33-3/8	33-3/8	33-3/8	33-3/8	33-3/8	33-3/8	± 3/4
Long	35-3/8	35-3/8	35-3/8	35-3/8	35-3/8	35-3/8	
X-Long	37-3/8	37-3/8	37-3/8	37-3/8	37-3/8	37-3/8	
XX-Long	39-3/8	39-3/8	39-3/8	39-3/8	39-3/8	39-3/8	
Outseam, 3/							
X-Short	38-3/4	39-1/4	39-3/4	40-1/4	40-3/4	41-1/4	
Short	41-1/4	41-3/4	42-1/4	42-3/4	43-1/4	43-3/4	
Regular	43-3/4	44-1/4	44-3/4	45-1/4	45-3/4	46-1/4	± 3/4,
Long	46-1/4	46-3/4	47-1/4	47-3/4	48-1/4	48-3/4	
X-Long	48-3/4	49-1/4	49-3/4	50-1/4	50-3/4	51-1/4	
XX-Long	51-1/4	51-3/4	52-1/4	52-3/4	53-1/4	53-3/4	
Half Leg Opening, 4/							
X-Short	8-5/8	8-5/8	9	9	9-3/8	9-3/8	
Short	8-5/8	8-5/8	9	9	9-3/8	9-3/8	± 1/2
Regular	8-5/8	8-5/8	9	9	9-3/8	9-3/8	
Long	8-5/8	8-5/8	9	9	9-3/8	9-3/8	
X-Long	8-5/8	8-5/8	9	9	9-3/8	9-3/8	
XX-Long	8-5/8	8-5/8	9	9	9-3/8	9-3/8	

1/, 2/, 3/, 4/ see 3.12.1.1 for methods of measurement.

THIS SPACE LEFT INTENTIONALLY BLANK

6.5.2.2 Style B. Female, Type III only stretch factor.

TABLE XV. Style B. Female, Type III only.

Size	25	28	31	35	Tol.
Half Waist, 1/	13-1/4	14-3/4	16-1/4	18-1/4	± 1/2
Inseam, 2/					
X-Short	27	27	27	27	
Short	29	29	29	29	
Regular	31	31	31	31	± 3/4
Long	33	33	33	33	
X-Long	35	35	35	35	
Outseam, 3/					
X-Short	35-1/4	35-3/4	36-1/4	37-3/4	
Short	37-3/4	38-1/4	38-3/4	39-1/4	
Regular	40-1/4	40-3/4	41-1/4	41-3/4	± 3/4
Long	42-3/4	43-1/4	43-3/4	44-1/4	
X-Long	45-1/4	45-3/4	46-1/4	46-3/4	
Half Leg Opening, 4/					
X-Short	8-7/8	8-7/8	9-1/8	9-3/8	
Short	8-7/8	8-7/8	9-1/8	9-3/8	
Regular	8-7/8	8-7/8	9-1/8	9-3/8	± 1/2
Long	8-7/8	8-7/8	9-1/8	9-3/8	
X-Long	8-7/8	8-7/8	9-1/8	9-3/8	
Half Waist, 5/ **Stretched (minimum)**	15-1/4	16-3/4	18-1/4	20-1/4	- 0, + 1
Half Hip 6/	21-1/8	22-5/8	23-5/8	25-5/8	±1/2

1/, 2/, 3/, 4/, 5/, 6/ See 3.12.1.1 for methods of measurement.

6.6 Certificate of compliance. The contracting activity may select to accept a certificate of compliance for that specified requirement.

6.7 Toxicity testing. If dermal toxicity testing is required, it shall be conducted using Title 40, Protection of Environment, Code of Federal Regulations current edition and applicable sections, which are also consistent with the following OECD tests:

Skin Sensitization 406 and Dermal Irritation 404 (https://www.oecd-ilibrary.org/environment/oecd-guidelines-for-the-testing-of-chemicals-section-4-health-effects_20745788?page=1)

Dermal Sensitization (https://www.law.cornell.edu/cfr/text/40/798.4100)

Dermal Toxicity (https://www.law.cornell.edu/cfr/text/40/798.2250)

6.8 Fabric defect replica set. The Slub/Knot Replica Set is available from SDL Atlas (see 2.3) for ordering details.

6.9 If needed, the Integrated Patch Kit conforming to GL-PD-10-08 in Operational Camouflage Pattern (Class 3 Size R) is available from Source One Tactical, 3280 Fairlane Farms Road, Wellington, FL 33414, (561) 753-6656

6.10 Note: MIL-PRF-32635, Cloth, Flame resistant was previously referenced as GL-PD 07-12, Cloth, Flame resistant. The types referenced are the same in both documents, however the Classes have changed due to camouflages no longer being referenced

GL-PD-07-12	MIL-PRF-32635
Class 3 Operational Camouflage Pattern (OCP) is	Class 1
Class 4 Coyote 498 is	Class 2

6.10.1 Changes since previous version. Type II 65/25/10 Rayon/Para-Aramid/Nylon Ripstop Flame Resistant Trousers was deleted, as there is no stock and it was replaced by Type III. All requirements and references to any testing covered by MIL-DTL-32659 were deleted.

6.11 Subject term (key word) listing.
Clothing
Clothing, Flame Retardant
Digital Print Desert Camouflage Navy Working Uniform (NWU) II
Digital Print Woodland Camouflage (NWU) III
Etofenprox
Insect protection
Operational Camouflage Pattern (OCP)
Pants
Permethrin

THIS SPACE LEFT INTENTIONALLY BLANK

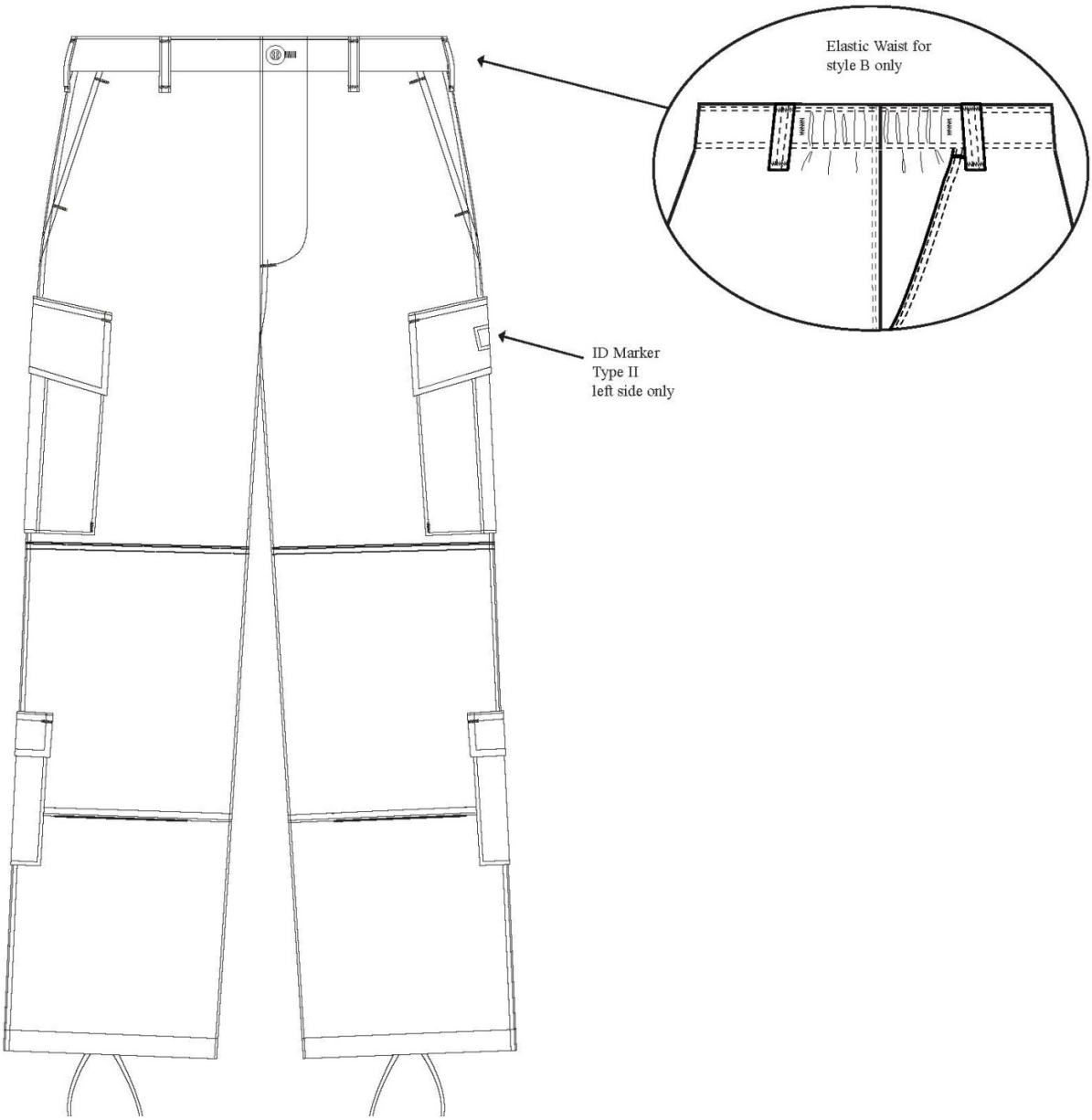

FIGURE 1. Trousers Front, Advanced Combat Uniform.

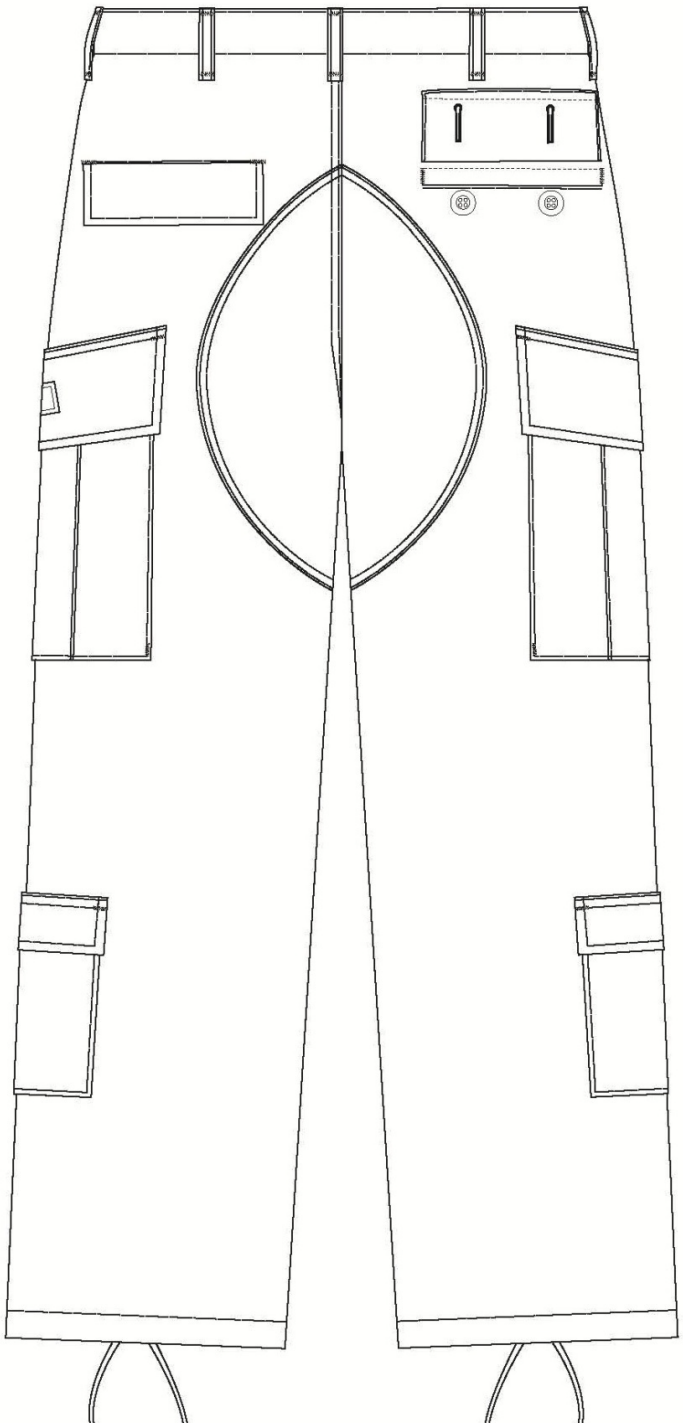

FIGURE 2. Trousers Back, Advanced Combat Uniform.

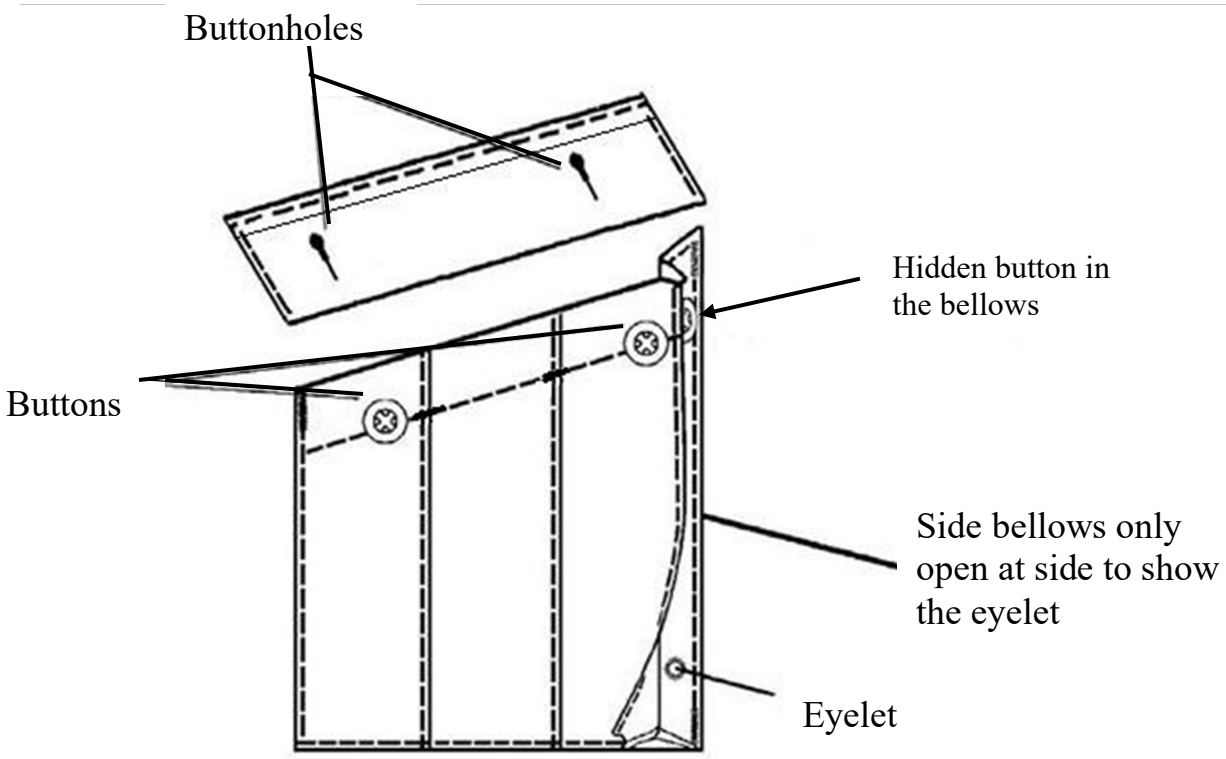

FIGURE 3. Trousers Left Leg Cargo Pocket, Advanced Combat Uniform.

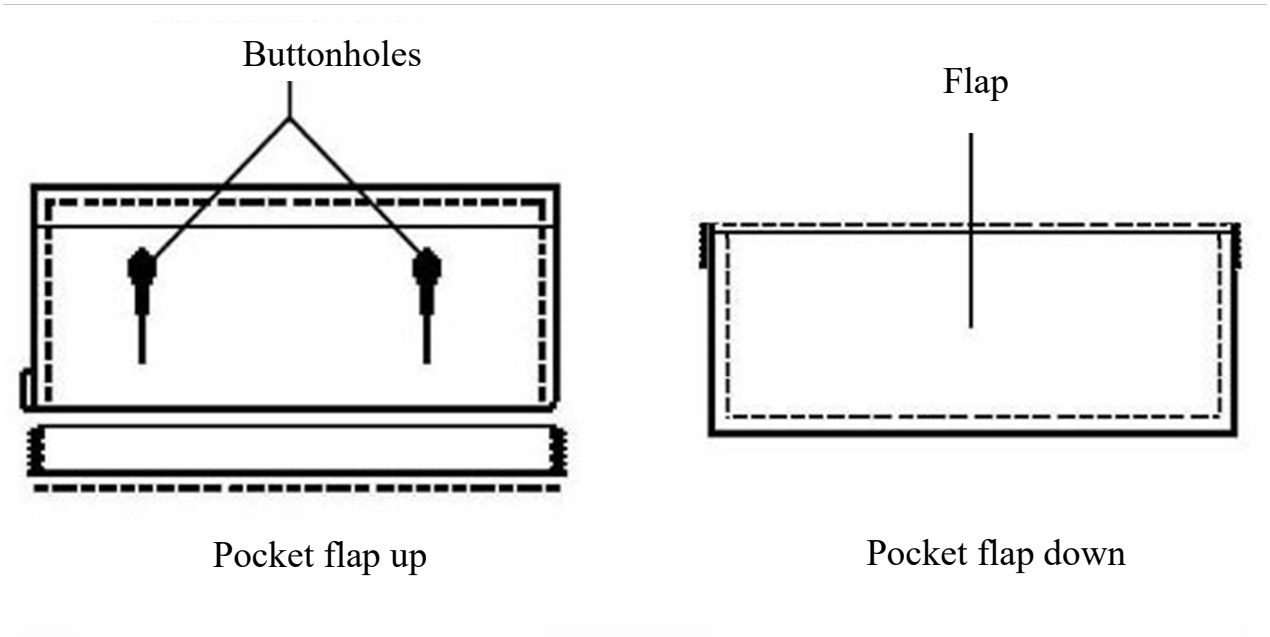

FIGURE 4. Trousers Back Hip Pocket, Advanced Combat Uniform.

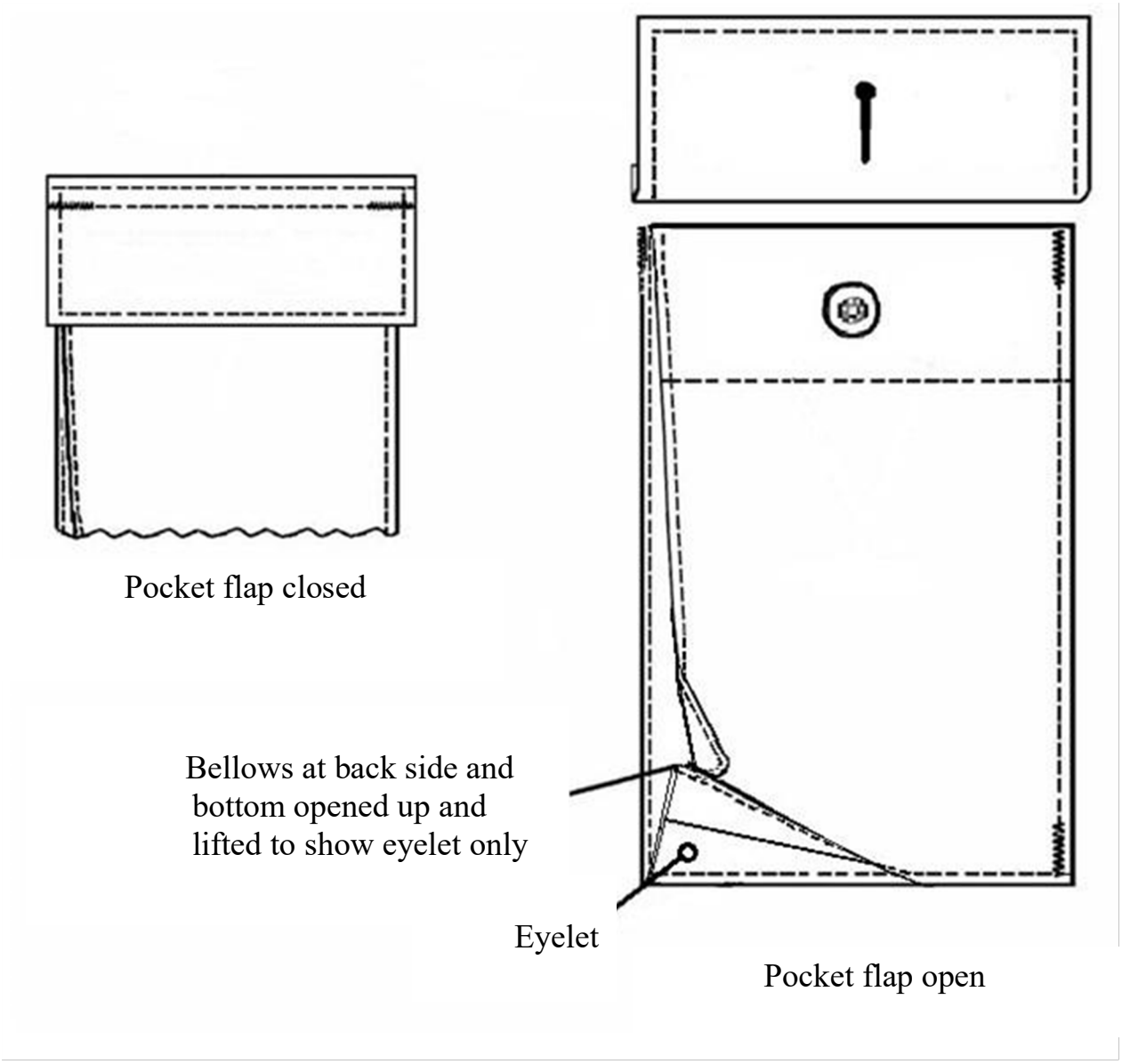

FIGURE 5. Trousers Right Leg Lower Pocket, Advanced Combat Uniform.

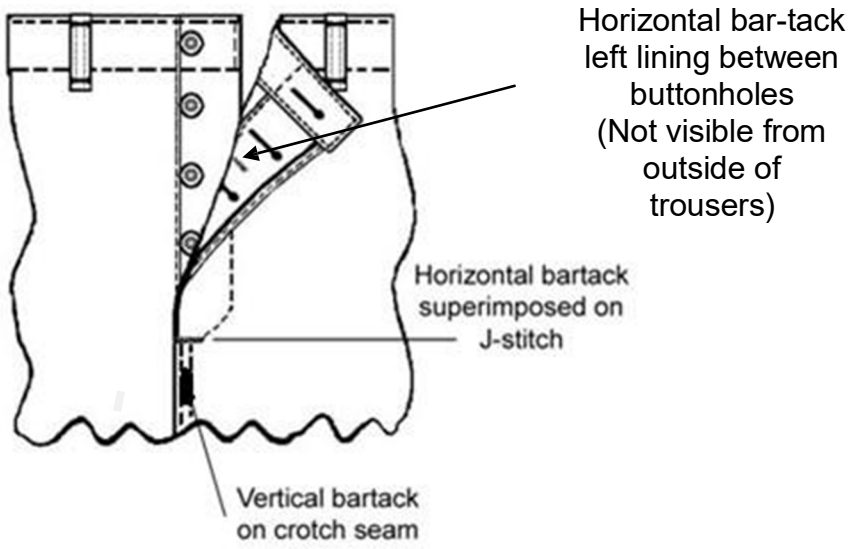

FIGURE 6A. Trousers Fly Construction (outer), Advanced Combat Uniform.

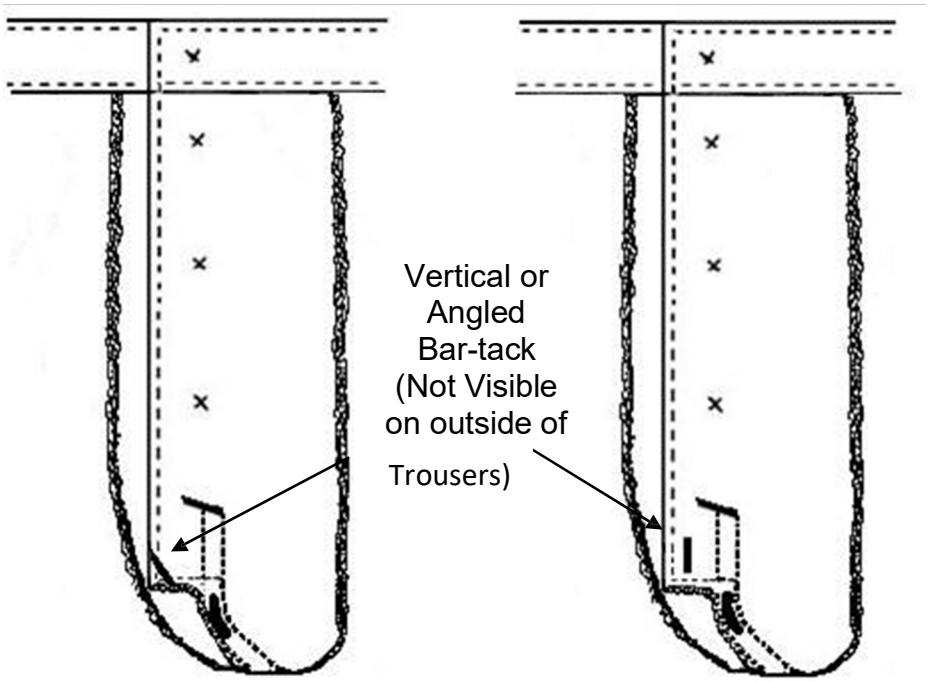

FIGURE 6B. Trousers Fly Construction (inner), Advanced Combat Uniform.

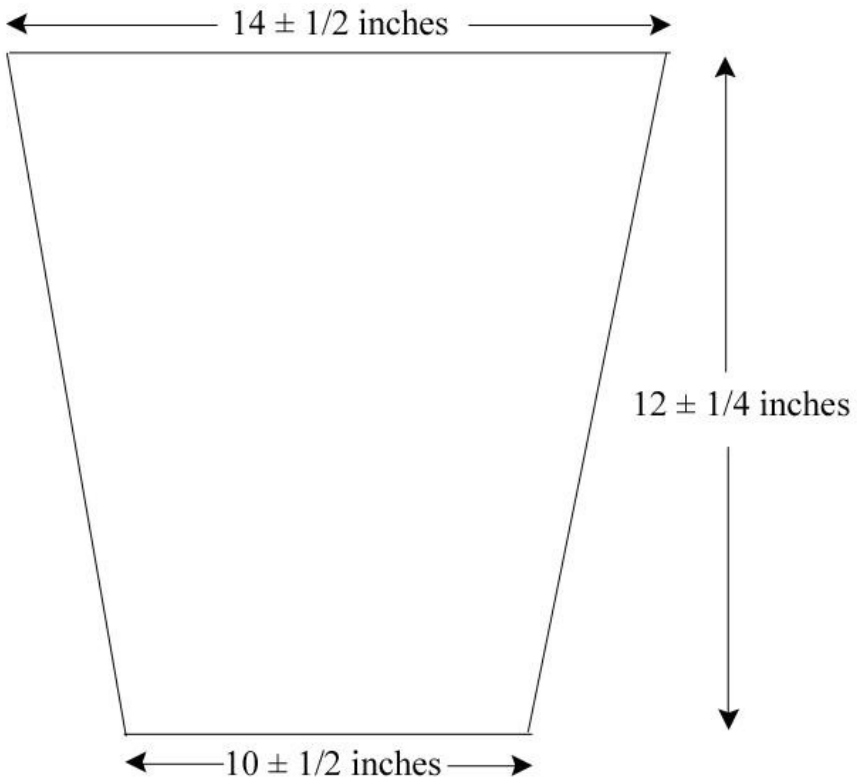

FIGURE 7. Test Specimen, % Bite Protection Test.

Custodian:
Army - GL
Navy- NU

Preparing activity:
Army – GL

Review activities
Air Force -11
Navy - MC