DWG NO	SH	REV
905-WMEC-342-003	1	2

MATERIALS LIST

REV	PC#	QTY	UNIT	MFR PART NO / NSN	DESCRIPTION
1	1	1	EA	ANVIL MODEL R TYPE A, SIZE 6	ANVIL MODEL R, FIG 81-H, TYPE A, SIZE 6, W/2" TOTAL TRAVEL. MOVEMENT SHALL BE "COLD TO HOT". CALIBRATED LOAD SHALL BE 275#. SET COLD TRAVEL INDICATOR TO 3/4" FROM BOTTOM, CORROSION RESISTANT FINISH; GALVANIZED WITH COATED COIL
1	2	1	EA	ANVIL MODEL R TYPE C, SIZE 6	ANVIL MODEL R, FIG 81-H, TYPE C, SIZE 6, W/2" TOTAL TRAVEL. MOVEMENT SHALL BE "COLD TO HOT". CALIBRATED LOAD SHALL BE 265#. SET COLD TRAVEL INDICATOR TO 3/4" FROM BOTTOM, CORROSION RESISTANT FINISH; GALVANIZED WITH COATED COIL
1	3	2	EA	ANVIL FIG. C-82	SHORT SPRING HANGER, TYPE B, HANGER SIZE 5, 3/4" WORKING RANGE, 126 LBS/IN SPRING RATE, CORROSION RESISTANT FINISH; GALVANIZED WITH COATED COIL
2	4	6	EA	ANVIL FIG. 146	ROD, 1/2" DIA, FULLY THREADED, NATIONAL COARSE, 13 TPI, CARBON STEEL
2	5	4	EA	ANVIL FIG. 299	CLEVIS, #2, 1/2" ROD SIZE, WITH 5/8" DIA PIN, MAX LOAD AT 750°F 1057 LBS, FORGED STEEL
2	6	4	EA	ANVIL FIG. 230	TURNBUCKLE, 1/2" ROD SIZE, FORGED STEEL
1	7	4	EA	ANVIL FIG. 66	WELDED BEAM ATTCHMENT, FOR 1/2" ROD, WITH PIN, STEEL
1	8	20	LF		PIPE, 8.625" OD X .148" WALL, SCHED 10S, SMLS, ASME B36.10, 321 SST, ASTM A376
1	9	1	LF		PIPE, 6.625" OD X .134" WALL, SCHED 10S, SMLS, ASME B36.10, 321 SST, ASTM A376
1	10	4	EA		ELBOW, 90°, LR, 8" NPS SCHED 10S, BUTT WELD, ANSI B16.9, 321 SST, ASTM A403
1	11	1	EA		ELBOW, 90°, SR, 8" NPS SCHED 10S, BUTT WELD, ANSI B16.9, 321 SST, ASTM A403
1	12	1	EA		ELBOW, 45°, LR, 8" NPS SCHED 10S, BUTT WELD, ANSI B16.9, 321 SST, ASTM A403
1	13	1	EA		REDUCING ELBOW, 8" X 6" SCHED 10S, 90°, BUTT WELD, ANSI B16.9, 321 SST, ASTM A403
2 [1]	14	1	EA	HYSPAN ANACONDA 215365 6 ES 77	EXPANSION JOINT, FOR 6" PIPE SIZE, 8 7/8" LG, ONE PLY SHORT STYLE, 1.6" AXIAL DEFLECTION, 0.48" LATERAL DEFLECTION, FLOATING 321 SS FLANGES, ANSI B16.5 150#, W/SHIPPING RODS
2 [1]	15	6	EA	HYSPAN ANACONDA 215767 8 EL 77	EXPANSION JOINT, FOR 8" PIPE SIZE, 16 7/8" LG, ONE PLY LONG STYLE, 4" AXIAL DEFLECTION, 2.4" LATERAL DEFLECTION, FLOATING 321 SS FLANGES, ANSI B16.5 150#, W/SHIPPING RODS
2 [1]	16	1	EA	HYSPAN ANACONDA 215770 12 EL 77	EXPANSION JOINT, FOR 12" PIPE SIZE, 16 7/8" LG, ONE PLY LONG STYLE, 5.5" AXIAL DEFLECTION, 2.2" LATERAL DEFLECTION, FLOATING 321 SS FLANGES, ANSI B16.5 150#, W/SHIPPING RODS
1	17	2	EA		CONCENTRIC REDUCER, 8" X 6", SCH. 10S, .148" WALL, ANSI B16.9, 321 SST, ASTM A403
2 [22]	18	8	EA		HEX BOLT, 5/16"-18 UNC-2A X 2" LG, ASTM A 193, GR B16
1	19	2	EA		FLANGE, 6" NPS, #150, SLIP ON, FLAT FACE, ANSI B16.5
1	20	10	EA		FLANGE, 8" NPS, #150, SLIP ON, FLAT FACE, ANSI B16.5
1	21	1	EA		FLANGE, 12" NPS, #150, SLIP ON, FLAT FACE, ANSI B16.5
1	22	8	EA	SHOCK TECH WM786	RESILIENT CUSHION, 2" LENGTH x 1.85" WIDTH x 1" THICK, 316 SST
1	23	3	SF	MINSEAL STYLE 2030R	SHEET GASKET MATERIAL, 1/8" THK, GRAPHITE LAMINATE WITH 316 SST FOIL INSERT, MIL-G-24716, CL B 11" OD, 7 7/8" ID, 9 7/8" BOLT CIRCLE, 8 x 9/16" BOLT HOLES
1	24	2	EA		6" FLANGE GASKET, SPIRAL WOUND, #150, FULL FACE, 1/8" THK, MIL-G-24716, TYPE 2, CLASS B
1	25	16	EA		8" FLANGE GASKET, SPIRAL WOUND, #150, FULL FACE, 1/8" THK, MIL-G-24716, TYPE 2, CLASS B
2	26	3	EA		12" FLANGE GASKET, SPIRAL WOUND, #150, FULL FACE, 1/8" THK, MIL-G-24716, TYPE 2, CLASS B
1	27	1	EA		CONCENTRIC BELL REDUCER, 12" X 8" SCH 10S, .180" WALL, ANSI B16.9, ASTM A403
2	28	4	SF		PLATE, 10.2#, 1/4" THK, ASTM A36, STEEL
1	29	36	LF		ANGLE, 5.8#, 4" X 3" X 1/4" THK, ASTM A36, STEEL
1	30	20	LF		I-BEAM, W5 X 16, 5" x 5", ASTM A36, STEEL
1	31	3	LF		RECT BAR 3" WIDE X 1/2" THK, ASTM A36, STEEL
2	32	6	LF		RECT BAR 2-1/2" WIDE X 3/4" THK, ASTM A36, STEEL
1	33	1	EA		I-BEAM GUSSET (FAB FROM PC#28 IAW DET 45-A)
1	34	1	EA		PORT SSDG SILENCER HANGER BRACKET (FAB FROM PC#36 IAW DET 34-C)
1	35	1	EA		STBD SSDG SILENCER HANGER BRACKET (FAB FROM PC#36 IAW DET 34-B)
2	36	30	SF		15.3# PLATE, 3/8" THK, ASTM A36 STEEL
1	37	12	EA	MCMASTER-CARR 6414K18	CLEVIS ROD END BLANKS, 3/4" SHANK DIA, 3/4" ID, 13/16" JAW OPENING, 3 5/8" SHANK CTR LG, CARBON STEEL, WITH CLEVIS AND COTTER PIN (SEE DETAIL 42-A)
1	38	25	LF		PIPE, 1" IPS, SCHED 80, ASTM A-106 GR B, STEEL
1	39	5	EA		SWAY STRUT ASSY (FAB IAW DET 44-A)
1	40	2	EA		SWAY STRUT ANCHOR BRACKET (FAB FROM PC#32 IAW DET 45-B)
1	41	2	SF		25.5# PLATE, 5/8" THK, ASTM A36 STEEL
1	42	1	LF		PIPE, 12" OD X .180" WALL, SCHED 10S, SMLS OR WELDED, ASME B36.10, 321 SST, ASTM A376
2	43	4	EA		SWAY BRACE MOUNTING PLATE (FAB FROM PC#36 IAW DET 46-C)
1	44	2	EA		FLANGE ATTACHMENT BRACKET (FAB FROM PC#31 & #32 IAW DET 45-C)
1	45	2	EA		SWAY BRACE GUSSET (FAB FROM PC#28 IAW DET 46-A)
1	46	26	LF		ANGLE, 5" X 3" X 1/4" THK, ASTM A36 STEEL
1	47	2	EA	GFE	MUFFLER, 8" FLANGES WITH ANSI 150 LB BOLT PATTERN, SIDE INLET, END OUTLET, 81-1/2" OAL, 321 SST
1	48	1	EA	GFE	MUFFLER, 12" FLANGES WITH ANSI 150 LB BOLT PATTERN, END INLET AND OUTLET, 48" OAL, 321 SST
1	49	3	EA	GFE	EXHAUST ELBOW, CATERPILLAR DWG# 4N4352, GRAY IRON CASTING, 4" ID INLET x 7-7/8" OUTLET
1	50	16	EA		3/4-10 UNC 2A X 2.5" LONG, HEX BOLT, ASTM A193 GR B16 ALLOY STEEL
2	51	84	EA		3/4-10 UNC 2A X 3" LONG, HEX BOLT, ASTM A193 GR B16 ALLOY STEEL

MATERIALS LIST CONT 16-D

NOTE: LONGITUDINAL CENTER OF GRAVITY IS MEASURED FROM FORWARD PERPENDICULAR (FRAME 0)

WEIGHT CONTROL

WEIGHT GROUP	DESCRIPTION	WT (LBS)	VCG REF BL	LCG (SEE NOTE)	F/A	TCG REF CL	P/S
259	PORT SSDG EXHAUST INSTALLATION	1329.1	19.8	110.6	A	10.1	P
259	STBD SSDG EXHAUST INSTALLATION	1357.5	22.9	110.8	A	10.1	S
259	EDG EXHAUST INSTALLATION	1017.7	21.0	244.5	A	9.5	S

GENERAL NOTES

1. THIS DRAWING IS CREATED TO FACILITATE THE INSTALLATION OF THE EXHAUST PIPING MODIFICATION IN SUPPORT OF THE 270' WMEC SERVICE LIFE EXTENSION PROGRAM. IT WAS COMPLETED BASED UPON A SHIP CHECK OF HULL 906.
2. ALL ABBREVIATIONS AND ACRONYMS ARE IN ACCORDANCE WITH ASME Y14.38-2007 "ABBREVIATIONS AND ACRONYMS FOR USE ON DRAWINGS AND RELATED DOCUMENTS" EXCEPT WHERE INDICATED:
   GFE=GOVERNMENT FURNISHED EQUIPMENT, MAF=MECHANICALLY ATTACHED FITTING, MNPT=MALE NATIONAL PIPE TAPER, FNPT=FEMALE NATIONAL PIPE TAPER, NPS=NOMINAL PIPE SIZE, LF=LINEAR FEET, SF=SQUARE FEET, LR=LONG RADIUS, SR=SHORT RADIUS.
3. FRAME SPACING IS 12"
4. FOR REMOVALS ASSOCIATED WITH THIS DRAWING SEE REFERENCE 1.
5. PAINT ALL NEW AND DISTURBED AREAS IN ACCORDANCE WITH COMDIST M10360.3 "COATING AND COLOR MANUAL".
6. ALL FABRICATION, WELDING, BRAZING & INSPECTION SHALL BE IN ACCORDANCE WITH SFLC STANDARD SPECIFICATION 0740, "WELDING AND ALLIED PROCESSES".
7. PIPING SHALL BE INSTALLED GENERALLY AS SHOWN, HOWEVER MINOR DEVIATIONS MAY BE MADE TO SUIT CONDITIONS ABOARD SHIP.
8. EXHAUST PIPING AND EQUIPMENT SHALL BE SUPPORTED TO PREVENT DAMAGE FROM VIBRATION AS DETAILED WITHIN THIS DRAWING.
9. EXHAUST PIPING AND EQUIPMENT SHALL BE INSULATED AND LAGGED IN ACCORDANCE WITH THE REQUIREMENTS OF REFERENCE 6. EXTERNAL SURFACE TEMPERATURES SHALL NOT EXCEED 125°F-135°F. THE EXHAUST STACK TEMPERATURE 12" FROM TURBO OUTLET CAN REACH 900°F. [2]
10. INSULATION SHALL NOT BE APPLIED TO WELDED AND FLANGED JOINTS UNTIL ALL TESTS ON THOSE JOINTS ARE COMPLETE. [3]
11. EXPANSION JOINT SHIPPING RODS INSTALLED BY THE MANUFACTURER SHALL REMAIN IN PLACE UNTIL INSTALLATION TO PREVENT DAMAGE.
12. (6) OF THE (12) CLEVIS ROD ENDS (ITEM 37) SHALL BE MACHINED TO RIGHT HAND THREADED 3/4" UNC-2A, AND (6) SHALL BE MACHINED TO LEFT HAND THREADED. [4]

TEST NOTES

ALL EXHAUST PIPING SHALL BE TESTED AS FOLLOWS:

T-1. WELDED JOINTS BETWEEN THE ENGINE OUTLET ELBOW AND THE INLET FLANGE OF THE MUFFLER SHALL BE "BUBBLE TESTED" BY BLANKING OPEN FLANGE ENDS, PRESSURIZING THE BLANKED SECTION TO NO MORE THAN 25 PSIG WITH COMPRESSED AIR AND SPRAYING THE WELD JOINTS WITH A 50-50 WATER AND SOAP MIXTURE TO INDICATE LEAKS. REPAIR ANY LEAKS AND RETEST AS NECESSARY. A CALIBRATED TEST GAUGE AND RELIEF VALVE SET AT 28 PSI SHALL BE USED FOR THE TEST.

T-2. AFTER SUCCESSFUL COMPLETION OF AIR TEST THE EXHAUST PIPING SHALL BE FULLY ASSEMBLED AND SERVICE TESTED. THERMAL IMAGING EQUIPMENT MAY BE USED TO HELP IDENTIFY ESCAPING EXHAUST GASES. REPAIR LEAKS AS NECESSARY.

PRELIMINARY

SHEET REVISION STATUS AND TITLE INDEX

SH	REV	TITLE
7	1	SUPPORT DETAILS
6	2	SUPPORT DETAILS
5	2	SUPPORT DETAILS
4	2	EDG EXHAUST PIPING INSTALL
3	2	SSDG EXHAUST PIPING INSTALL
2	2	SSDG EXHAUST PIPING INSTALL
1	2	TITLE SHEET, NOTES, REFERENCES, MATERIALS LIST

APPLICABILITY

PLAN SET	HULLS
270 WMEC	906

REVISIONS

REV	SH	ZONE	ITEM	DESCRIPTION	DATE	APPVL SIG & ORG
1				THIS DRAWING WAS DEVELOPED IAW PROJECT 79F05 FOR INITIAL RELEASE FOR PROTOTYPE INSTALLATION ABOARD USCGC SENECA.	7/12/21	KEVIN GRASSON /S/ CG YARD
2				THIS REVISION WAS ACCOMPLISHED IAW. PROJECT 79F05.		
	1	6-C	1	CHANGED "DEFECTION" TO "DEFLECTION".		
	1	5-D	2	CHANGED "REFERENCE 5" TO "REFERENCE 6"		
	1	5-D	3	ADDED "ON THOSE JOINTS" TO GN 10.		
	1	5-D	4	CHANGED GN 12 TO "12 (6) OF THE (12) CLEVIS ROD ENDS (ITEM 37) SHALL BE MACHINED TO RIGHT HAND THREADED 3/4" UNC-2A, AND (6) SHALL BE MACHINED TO LEFT HAND THREADED." PREVIOUSLY WAS "CLEVIS ROD ENDS (ITEM 37) SHALL BE RIGHT HAND THREADED 3/4"-16 UNC-2A ON 6 PIECES AND LEFT HAND THREADED 3/4"-16 UNC-2A ON 6 PIECES."		
	2	11-D 12-D	5	ADDED DIMENSIONS TO PORT SSDG SWAY BRACE LOCATIONS.		
	3	19-D	6	ADDED A REF DIMENSION AND CHANGED THE LAYER OF THE EXHAUST ELBOW TO GRAYSCALE ON DET 19-D		
	3	23-A	7	CHANGED WELD SYMBOL TO INDICATE FAR SIDE, PREVIOUSLY SHOWN AS NEAR SIDE		
	4	30-C	8	CHANGED DETAIL DESCRIPTION TO "EDG", PREVIOUSLY WAS "SSDG".		
	4	27-C	9	CHANGED DETAIL DESCRIPTION TO "EDG", PREVIOUSLY WAS "SSDG"		
	5	39-B	10	CHANGED WELD SYMBOL TO GROVE WELD, PREVIOUSLY WAS FILLET.		
	5	36-A	11	CHANGED DETAIL REF TO "[19-A]". PREVIOUSLY WAS "[39-B]".		
	6	48-C 46-C	12	ADDED WELD SYMBOL TO ATTACH PC 45 TO PC 41 AND WEB FRAME.		
	6	48-D	13	CHANGED SCALE TO "6"= 1'-0"" PREVIOUSLY WAS "3"= 1'-0"".		
	6	46-C 46-B	14	CHANGED DIMENSION OF PC# 45 TO "7 3/4"" PREVIOUSLY WAS 7 11/16""		
	6	44-A	15	ADDED PC #38 CALLOUT		
	6	45-C	16	CHANGED DIMENSIONS ON PC #44 TO MATCH FLANGE SIZE		
	6	43-B	17	CHANGED SCALE TO "6"= 1'-0"" PREVIOUSLY WAS "3"= 1'-0"".		
	6	44-C	18	CHANGED DRILL DIMENSIONS AND QUANTITIES TO CORRECT SIZE AND AMOUNT.		
	6	42-D 43-D	19	ADDED LINEAR DIMENSIONS TO PORT SIDE SWAY BRACE SUPPORTS.		
	2	16-C	20	CHANGED ITEM 71, PREVIOUSLY WAS "HEX HEAD BOLT, LONG-SHANK, 1-1/8"-7 UNC 2A x 2-1/2" LONG, ASTM A193 GR B16 ALLOY STEEL".		
	2	16-C	21	CHANGED ITEM 72, PREVIOUSLY WAS "HEX NUT, SELF-LOCKING, ALL METAL, 1-1/8"-7 2B, ASTM A193 GR 16 ALLOY STEEL".		
	1	8-C	22	DELETED ITEM 18 "61.2# PLATE, 1-1/2" THK, ASTM A480 TYPE 321 SST", REPLACED WITH ITEM 87		

REVISIONS CONT 16-B

NO.	TITLE	DRAWING NO.
7	WEB FR/ STAN 110, 117, 125, 131	905-WMEC-117-007
6	THERMAL INSULATION REQUIREMENTS FOR MACHINERY AND PIPING	MIL-STD-769
5	VENT, ER & ECC-PLAN, SECT & ELEV A & D	905-WMEC-513-005
4	SSDG MODIFICATION - EXHAUST SYSTEM MOD	905-WMEC-259-003
3	DIESEL EXHAUST SYSTEM ARR & DET	905-WMEC-259-002
2	SLEP CAT C18 SSDG & EDG ANCILLIARY EQUIPMENT FOUNDATIONS	905-WMEC-183-012
1	SLEP CAT C18 DIESEL SUPPORT SYSTEMS REMOVALS	905-WMEC-342-001

REFERENCE PLANS

SPECIAL NOTATIONS

THIS DRAWING IS PRELIMINARY AND IS APPROVED FOR PROTOTYPE USE ON USCGC SENECA (WMEC 906) ONLY. APPROVED: KEVIN GRASSON, MACHINERY BRANCH, 7/12/21.
NOTE: WEIGHTS & MOMENTS WILL BE IN REV 3 OR DOWN.

STINFO DESIGNATION

DISTRIBUTION STATEMENT D- DISTRIBUTION AUTHORIZED TO DHS/CG/DOD AND THEIR CONTRACTORS; ADMINISTRATIVE AND OPERATIONAL PURPOSE; 01/01/2009. OTHER REQUESTS SHALL BE REFERRED TO: COMMANDING OFFICER, USCG SFLC ESD TIMB, 2401 HAWKINS POINT ROAD, MAIL STOP 25/STINFO PROJECT MANAGER, BALTIMORE, MD 21226-5000.
WARNING-THIS DOCUMENT CONTAINS TECHNICAL DATA WHOSE EXPORT IS RESTRICTED BY THE ARMS EXPORT-CONTROL ACT (TITLE 22, U.S.C. SEC 2751, ET. SEQ.) OR THE EXPORT ADMINISTRATION ACT OF 1979, AS AMENDED, TITLE 50, U.S.C. APP 2401 ET. SEQ. VIOLATIONS OF THESE EXPORT LAWS ARE SUBJECT TO SEVERE CRIMINAL PENALTIES.
DESTRUCTION NOTICE-FOR UNCLASSIFIED, LIMITED DOCUMENTS, DESTROY BY ANY METHOD THAT WILL PREVENT DISCLOSURE OF CONTENTS OR RECONSTRUCTION OF THE DOCUMENT.

PROJECT NO. 79F05

DESIGNED: JCW	5/19/21	
DRAWN: JCW	5/19/21	
CHECKED: TPM	6/18/21	
APPROVED: KTG	7/12/21	
USCG APPROVAL	MM/DD/YY	
APPVL SIG /s/		
APPVL AUTH		

UNITED STATES COAST GUARD — WASHINGTON, D.C. 20593
OFFICE OF NAVAL ENGINEERING

270 FT — WMEC

SLEP CAT C18 SSDG & EDG EXHAUST MODIFICATIONS

NON-SELECTED RECORD DRAWING
UPDATE NOT REQUIRED. VERIFY CONFIGURATION BEFORE USE.

SIZE	CAGE CODE	USCG DRAWING NO	REV
D	81340	905-WMEC-342-003	2

SCALE: NONE — DRAWING RELEASE DATE: — SHEET: 1 OF 7

ELECTRONIC FILE NAME
905-WMEC_342_3_1_-_2.dwg

DWG NO 905-WMEC-342-003 | SH 1A | REV 2

REVISIONS

REV	SH	ZONE	ITEM	DESCRIPTION	DATE	APPVL SIG & ORG
2				THIS REVISION WAS ACCOMPLISHED I.A.W. PROJECT 79F05.		
	2	16-C	23	DELETED ITEM 78, "HEX HEAD BOLT, 7/8"-9 UNC 2A x 4-1/4" LONG, ASTM A 193 GR B16 ALLOY STEEL", REPLACED WITH ITEM 88, "HEX PREVAILING TORQUE LOCK NUT, ALL-STEEL, 5/16"-18 UNC-2B, ASTM A 194, GR B16".		
	2	16-C	24	DELETED ITEM 79, "HEX NUT, 7/8"-9 UNC 2B, ASTM A 194 GR 16 ALLOY STEEL", REPLACED WITH ITEM 89, "WASHER, FOR 5/16" BOLT, 0.344" ID X 0.75" OD, ASME B18.21.1, GR B16, ASTM A193".		
	2	16-D	25	CHANGED ITEM 59, PREVIOUSLY WAS "VIBRA-MOUNT RUBBER, 36" LONG X 13" WIDE X 12" THICK"		
	2	16-D	26	CHANGED ITEM 56, PREVIOUSLY WAS "ROOT VALVE .375 ORIFICE, 1/2" MNPT X 1/2" FNPT, 316 SST BODY & BONNET, 316 SST BALL SEAT, GRAFOIL PACKING." J.C.WHALEY	8/17/21	K. GRASSON /s/ CG YARD

PRELIMINARY

UNITED STATES COAST GUARD WASHINGTON, D.C. 20593

OFFICE OF NAVAL ENGINEERING

270 FT WMEC

SLEP CAT C18 SSDG & EDG EXHAUST MODIFICATIONS

SSDG EXHAUST PIPING INSTALL

SIZE	FSCM CAGE NO.	U.S.C.G. DRAWING NO.	REV
D	81340	905-WMEC-342-003	2

SCALE: AS NOTED | 6.00 SQ FT | SHEET 1A

ELECTRONIC FILE NAME:
905-WMEC_342_3_1_-_2.dwg

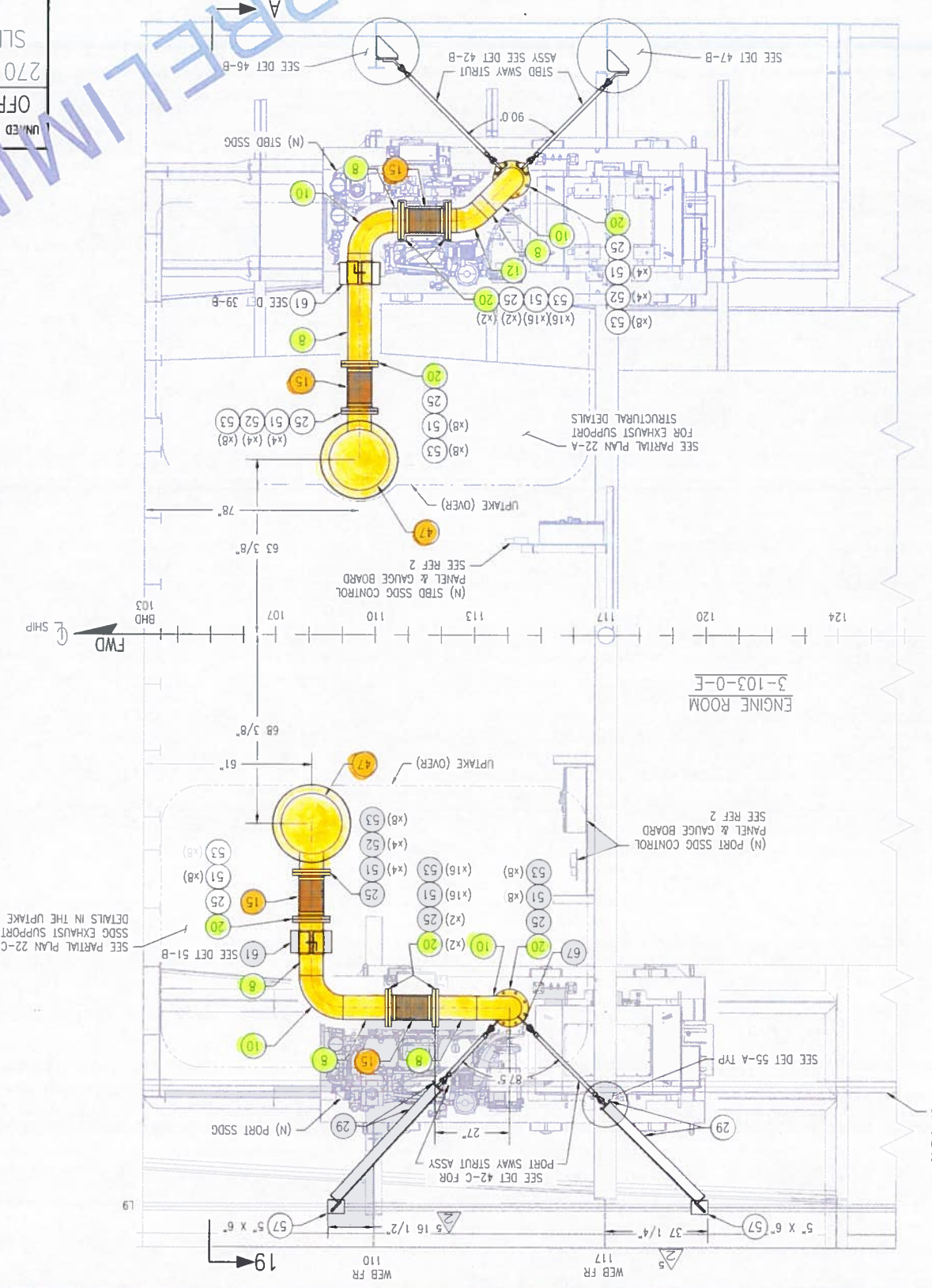

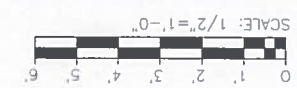

MATERIALS LIST

REV	PO#	QTY	UNIT	MFR PART NO / NSN	DESCRIPTION
2	52	36	EA		3/4-10 UNC 2A X 3.5" LONG, HEX BOLT, ASTM A193 GR B16 ALLOY STEEL
2	53	136	EA		3/4-10 UNC 2B HEX NUT, ASTM A194 GR 16 ALLOY STEEL
1	54	6	EA	SWAGELOK SS-400-1-8	ADAPTER, 1/4" OD TUBE X 1/2" MNPT, 316 SST
1	55	100	LF		TUBING, 1/4" O.D. X .035" WALL, 321 SST, MIL-P-24691/3
2 26	56	1	EA	DR-LOK V46GR-8N-GF-S	GAGE ROOT VALVE, .20" ORIFICE, 1/2" MNPT X 1/2" FNPT, 316 SST BODY & COMPONENTS, GRAFOIL PACKING
1	57	7	SF		PLATE, 20 #, 1/2" THK, STEEL, ASTM A131
1	58	1	EA		24" O.D. PIPE HANGER CLAMP, CARBON STEEL, ASTM A-131
2 25	59	1	EA	MCMASTER-CARR 9455K98	NEOPRENE RUBBER SHEET, 36" WIDE 24" LONG 1/2" THICK, 70A DUROMETER, 900 PSI TENSILE STRENGTH, -30° TO 200° F TEMPERATURE RANGE.
1	60	4	EA		SILENCER MOUNTING LUG, FAB FROM PC# 36 IAW DET 34-A
1	61	2	EA		PIPE ALIGNMENT GUIDE FOR 8" PIPE, MODIFY IAW DETAILS 38-A & 39-C
1	62	3	EA		FLANGE, SLIP-ON, FLAT FACE, FAB DETAILS IAW 6 NPS ASME B16.5 150# FOR ID BORE, THICKNESSES AND FACING TEMPLATE OD AND BOLT DRILLING FROM PC#49 (11" OD, 8 EA 35/64" HOLES ON 9-7/8" DIA BOLT CIRCLE)
2	63	6	EA		PLUG, 1/2" MNPT, 316 SST
1	64	24	EA		HEX HEAD BOLT, 1/2-13 UNC 2A x 2-1/2" LONG, ASTM A 193 GR B16 ALLOY STEEL
1	65	24	EA		HEX NUT, 1/2-13 UNC 2B, ASTM A 194 GR 16 ALLOY STEEL
1	66	2	SF		PLATE 15.3#, 3/8" THK, 321 SST ASTM A240
1	67	6	EA		WELD LUG, PIPE, FAB FROM PC#66, 3/8" STEEL PLATE, IAW DET 43-B
2	68	16	EA		HEX HEAD BOLT, 5/8-11 UNC x 2" LONG, ASTM A193 GR B16 ALLOY STEEL
2	69	16	EA		HEX NUT, 5/8-11 UNC 2B, ASTM A194 GR 16 ALLOY STEEL
2	70	16	EA		LOCK WASHER, 5/8", ASTM A194 GR 16 ALLOY STEEL
1	71	3	EA	MERIAM 10MA25	MANOMETER, CLEAN-OUT U-TYPE, 10" RANGE, 250 PSIG, WALL MOUNTED, GLASS INDICATING FUEL, NEOPRENE PACKING, ALUMINUM BODY, 316 SS WETTED PARTS, SATIN ALUMINUM BLACK GRADUATIONS SCALE FINISH, ALUMINUM BODY BLACK CRACKLE ENAMEL HEAD FINISH.
1	72	3	EA	SWAGELOK SS-400-1-4	ADAPTER, 1/4" MNPT X 1/4" O.D. TUBE, 316 SS
1	73	8	EA		HEX HEAD BOLT, 3/8"-16 UNC 2A x 1-3/4" LONG, 316 SST
1	74	8	EA		HEX NUT, 3/8"-16 UNC 2B, 316 SST
2	75	2	EA		WELD LUG, STRUCTURAL, FAB FROM PC#36, 3/8" STEEL PLATE, IAW DET 48-D
1	76	6	EA		TUBING UNION, -4 TUBE SIZE, SAE 37 FLARE ENDS, INCLUDE NUTS AND SLEEVES, 316 SST
1	77	2	EA		SILENCER INLET FLANGE BRACKET, FAB FROM PC#36 IAW DETAIL 52-C
2 23	78	8	EA		HEX PREVAILING TORQUE LOCK NUT, ALL-STEEL, 5/16"-18 UNC-2B, ASTM A 194, GR B16
2 24	79	8	EA		WASHER, FOR 5/16" BOLT, 0.344" ID X 0.75" OD, ASME B18.21.1, GR B16, ASTM A193
2	80	5	EA		HEAVY HEX JAM NUT, 3/4"-16 UNC 2B, RIGHT HAND THREAD, ASTM A194, B16 ALLOY STEEL
2	81	5	EA		HEAVY HEX JAM NUT, 3/4"-16 UNC 2B, LEFT HAND THREAD, ASTM A194, B16 ALLOY STEEL
2	82	5	EA	MSC 556498 68	ADAPTER, 3/4"-16 ROD-END THREAD SIZE X 1-1/8" TUBE SIZE X 0.083" THK WALL, RIGHT HAND THREAD
2	83	5	EA	MSC 556489 68	ADAPTER, 3/4"-16 ROD-END THREAD SIZE X 1-1/8" TUBE SIZE X 0.083" THK WALL, LEFT HAND THREAD
1	84	4	LF		FLAT BAR, 1" X 1" X 3/16 THK, ASTM A36 STEEL
1	85	4	EA		PLATE, 12 #, 24" X 8" X 5/16" THK, STEEL, ASTM A131
1	86	4	EA		PLATE, 12 #, 17 1/2" X 8" X 5/16" THK, STEEL, ASTM A131

PRELIMINARY

UNITED STATES COAST GUARD — WASHINGTON, D.C. 20593

OFFICE OF NAVAL ENGINEERING

270 FT — WMEC

SLEP CAT C18 SSDG & EDG EXHAUST MODIFICATIONS

SSDG EXHAUST PIPING INSTALL

SIZE	FSCM CAGE NO	U.S.C.G. DRAWING NO	REV
D	81340	905-WMEC-342-003	2

SCALE: AS NOTED — 6.00 SQ FT — SHEET 2

ELECTRONIC FILE NAME: 905-WMEC_342_3_1_-_2.dwg

DWG NO 905-WMEC-342-003 — SH 2 — REV 2

SSDG's

DWG NO 905-WMEC-342-003 | SH 3 | REV 2

SSDG,S

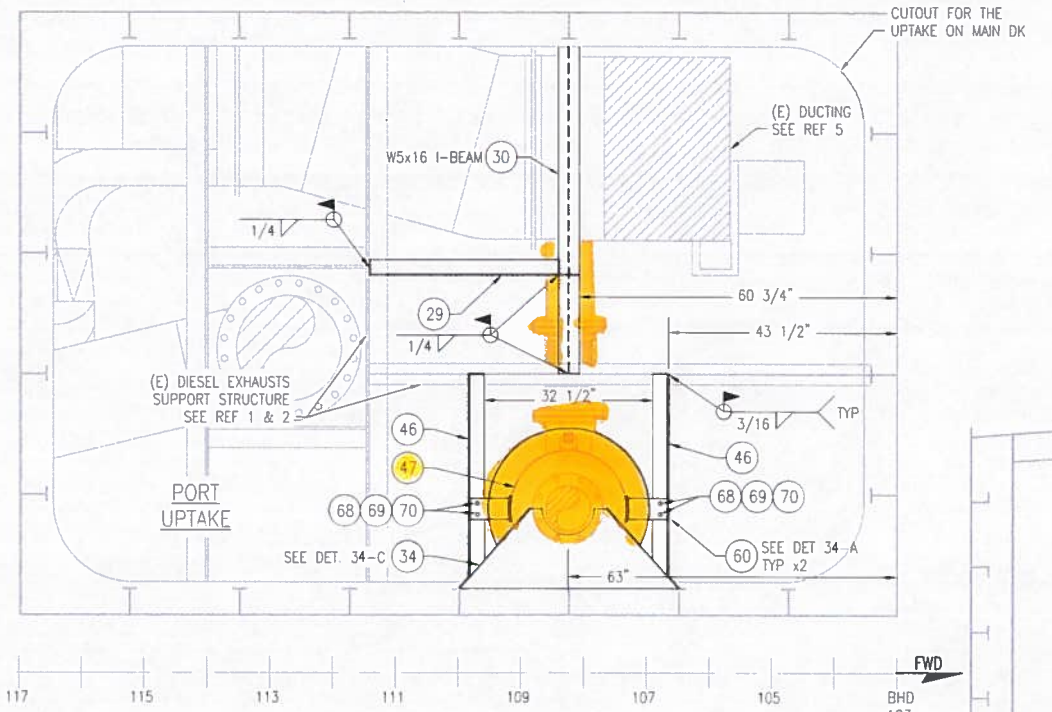

PARTIAL PLAN 22-C

PORT UPTAKE STRUCTURE INSTALL
SCALE: 3/4"= 1'-0"

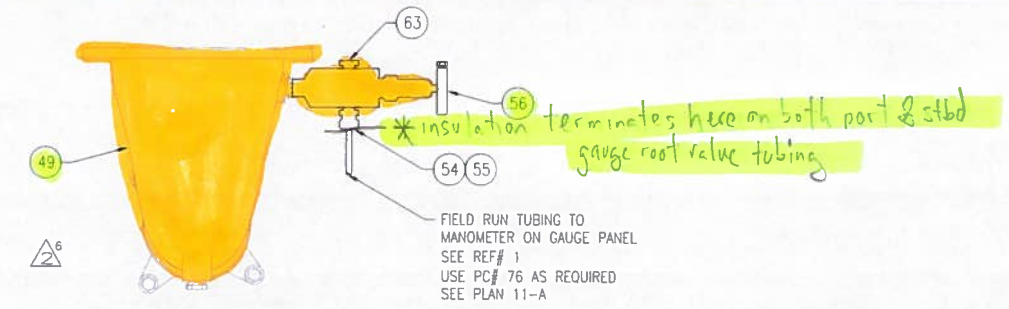

DETAIL 19-D

SSDG EXHAUST ELBOW & MANOMETER ROOT VALVE – TYP
SCALE: 3"= 1'-0"

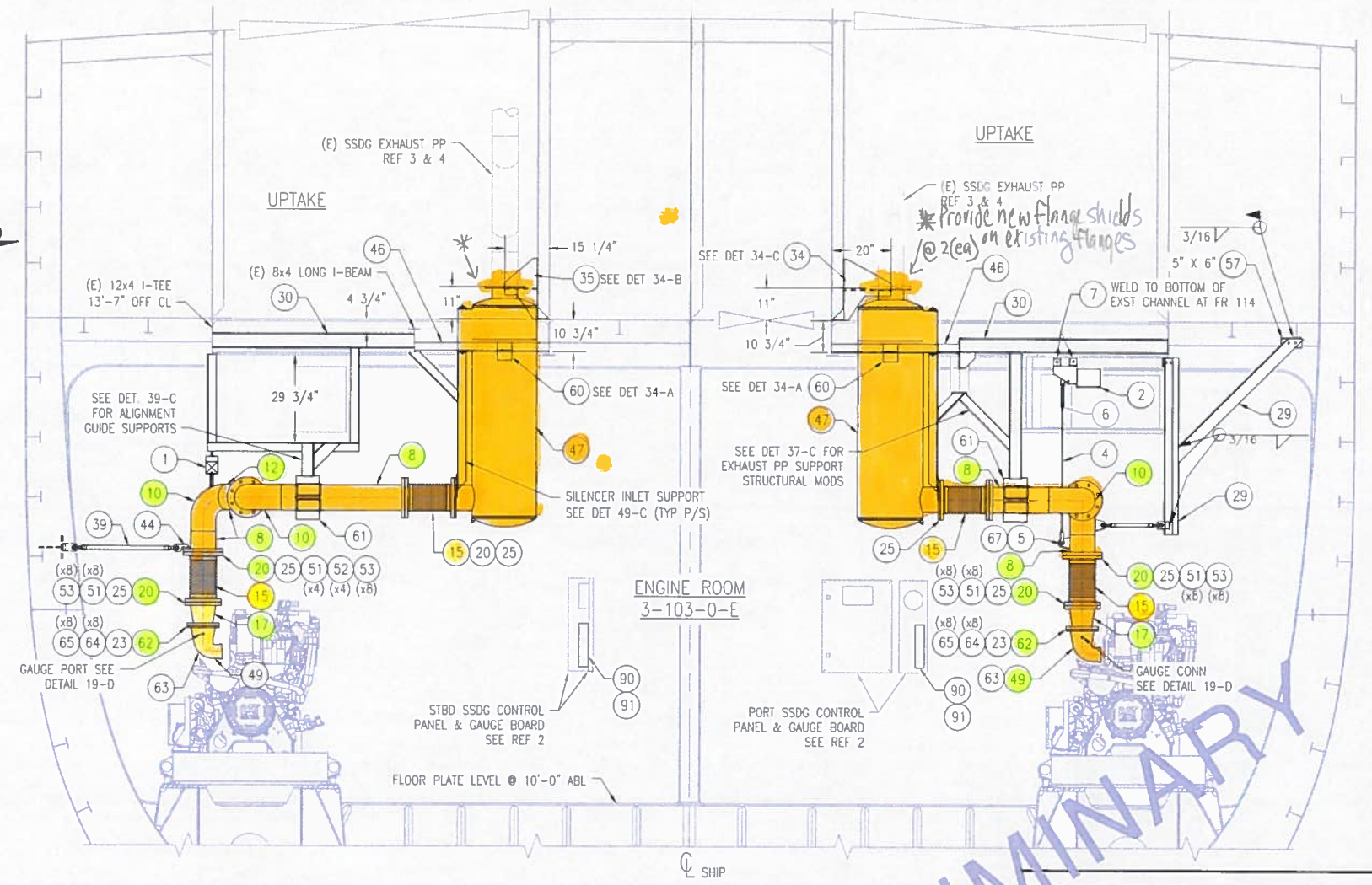

SECTION VIEW 19-A

FR 106 LKG AFT
SSDG EXHAUST INSTALLATION
SCALE: 1/2"= 1'-0"

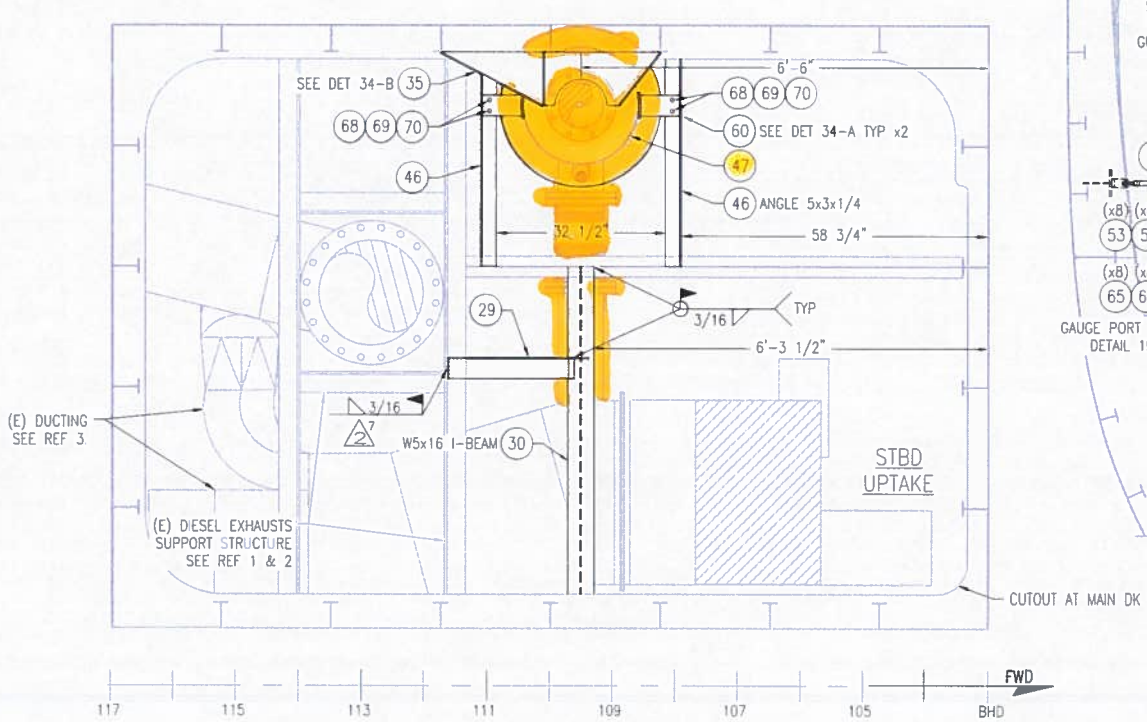

PARTIAL PLAN 22-A

STBD UPTAKE
EXHAUST STRUCTURAL SUPPORT MODS
SCALE: 3/4"= 1'-0"

SCALE: 3"=1'-0" | SCALE: 3/4"=1'-0" | SCALE: 1/2"=1'-0"

PRELIMINARY

UNITED STATES COAST GUARD — WASHINGTON, D.C. 20593
OFFICE OF NAVAL ENGINEERING

270 FT — WMEC

SLEP CAT C18 SSDG & EDG EXHAUST MODIFICATIONS
SSDG EXHAUST PIPING INSTALL

SIZE	FSCM CAGE NO.	U.S.C.G. DRAWING NO	REV
D	81340	905-WMEC-342-003	2
SCALE: AS NOTED		6.00 SQ FT	SHEET 3

ELECTRONIC FILE NAME: 905-WMEC_342_3_1_-_2.dwg

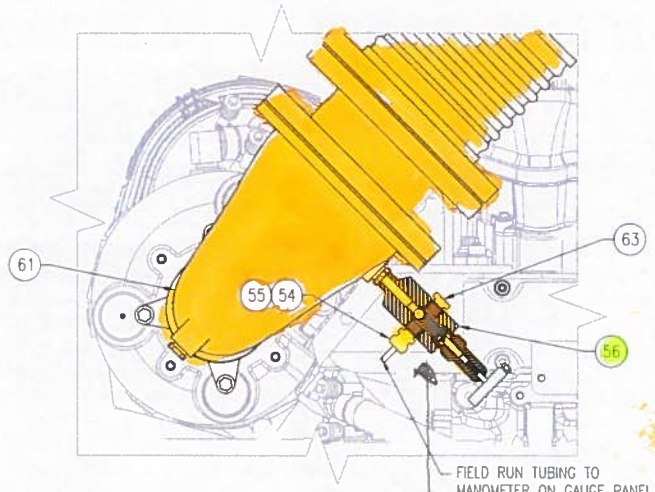

* insulation terminates here
EDG gauge root valve tubing

DETAIL 31-C
EDG TUBING CONNECTION TO GAUGE PANEL
SCALE: 3"= 1'-0"
[27-C]

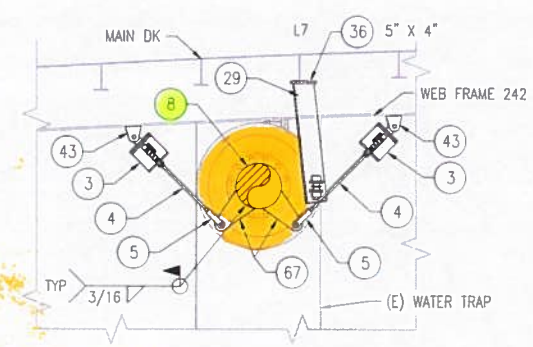

DETAIL 30-C
FRAME 241 LKG AFT
EDG EXHAUST SPRING HANGERS
SCALE: 3/4"= 1'-0"
[27-C]

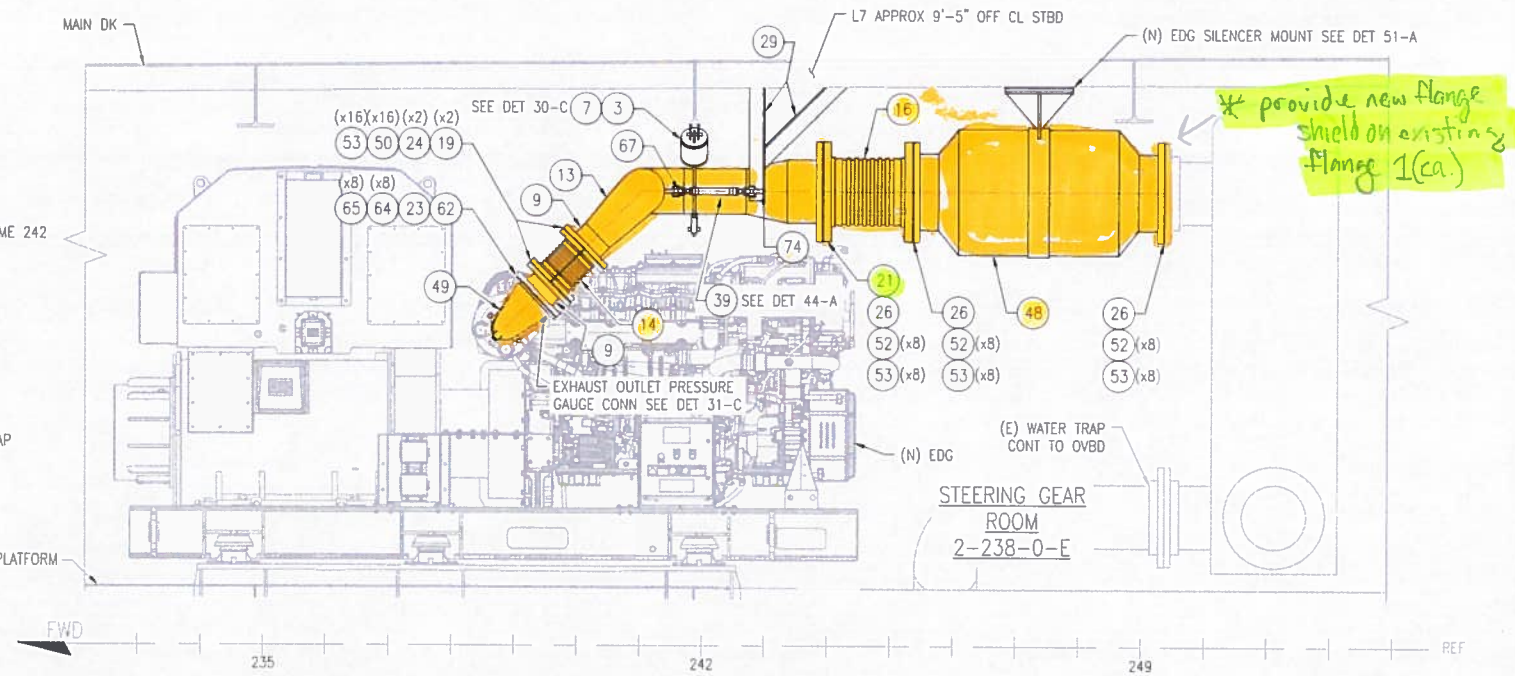

* provide new flange shield on existing flange 1(ea.)

ELEVATION VIEW 27-C
FRAME 242 LKG AFT
EDG EXHAUST INSTALLATION
SCALE: 3/4"= 1'-0"
[28-A]

EDG

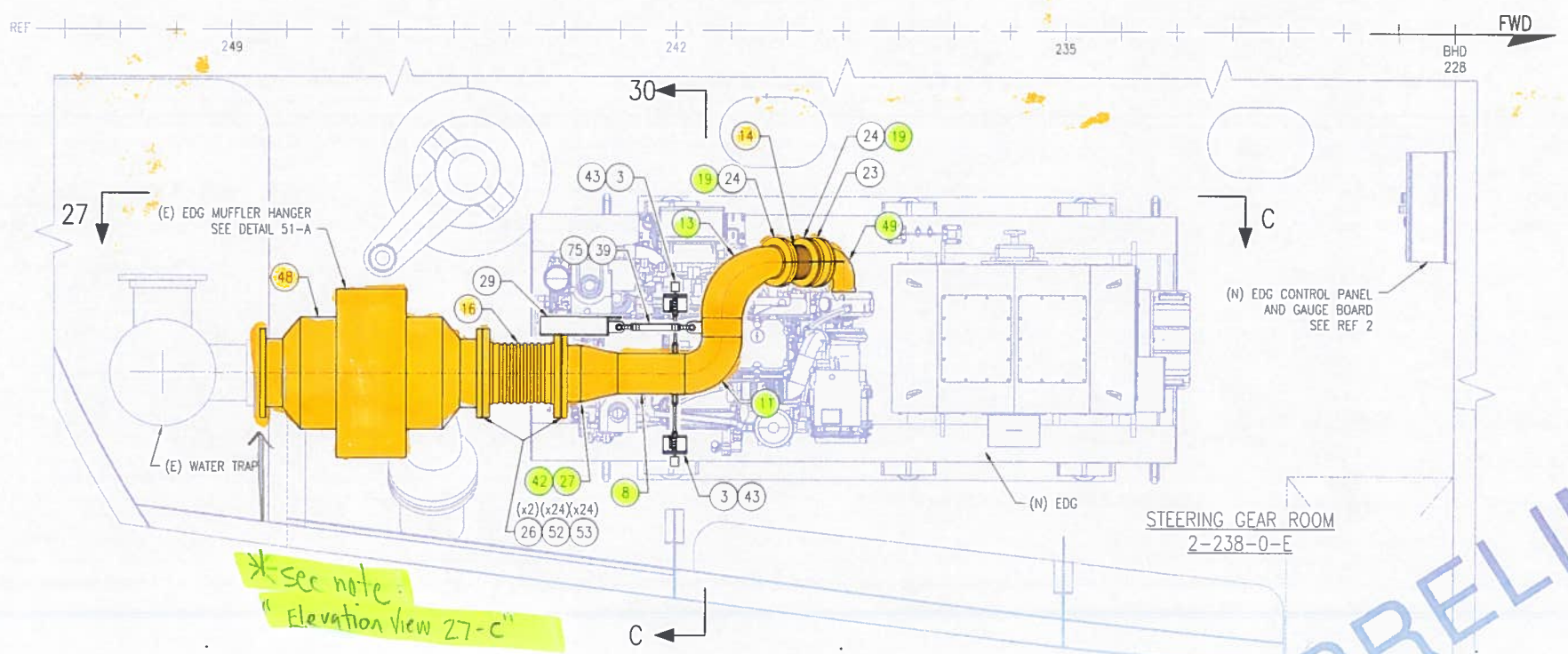

* see note: "Elevation View 27-C"

PLAN VIEW 28-A
EDG EXHAUST INSTALLATION
SCALE: 3/4"= 1'-0"

0 1' 2' 3' 4'
SCALE: 3/4"=1'-0"
0 6" 1'
SCALE: 3"=1'-0"

PRELIMINARY

UNITED STATES COAST GUARD — WASHINGTON, D.C. 20593
OFFICE OF NAVAL ENGINEERING

270 FT — WMEC

SLEP CAT C18 SSDG & EDG EXHAUST MODIFICATIONS
EDG EXHAUST PIPING INSTALL

SIZE	FSCM CAGE NO	U.S.C.G. DRAWING NO	REV
D	81340	905-WMEC-342-003	2
SCALE AS NOTED		6.00 SQ FT	SHEET 4

ELECTRONIC FILE NAME
905-WMEC_342_3_1_-_2.dwg

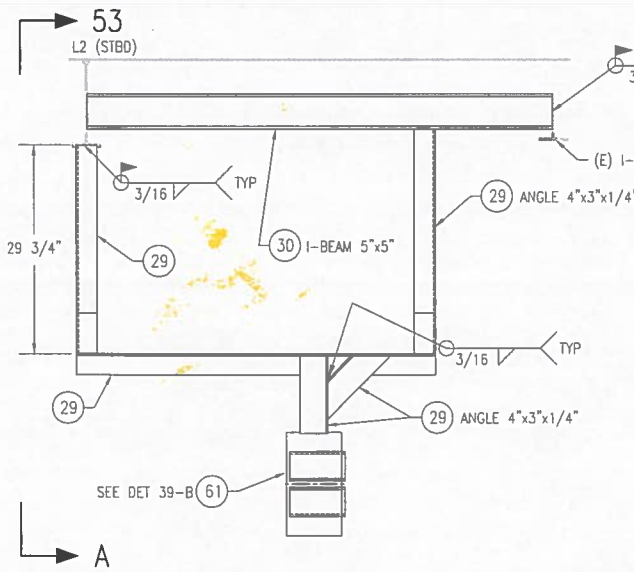

DETAIL 39-C

STBD SSDG EXHAUST PIPE ALIGNMENT GUIDE SUPPORTS
SCALE: 1"= 1'-0"
[19-A]

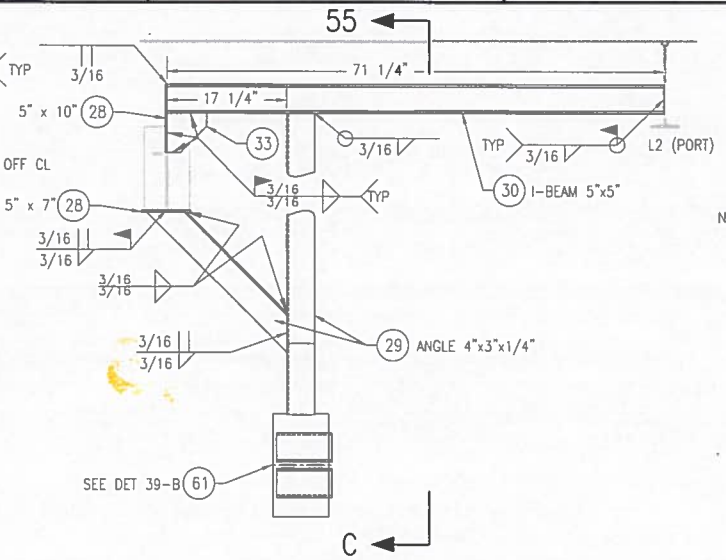

DETAIL 37-C

PORT SSDG EXHAUST PIPE ALIGNMENT GUIDE SUPPORTS
SCALE 1"= 1'-0"
[19-A]

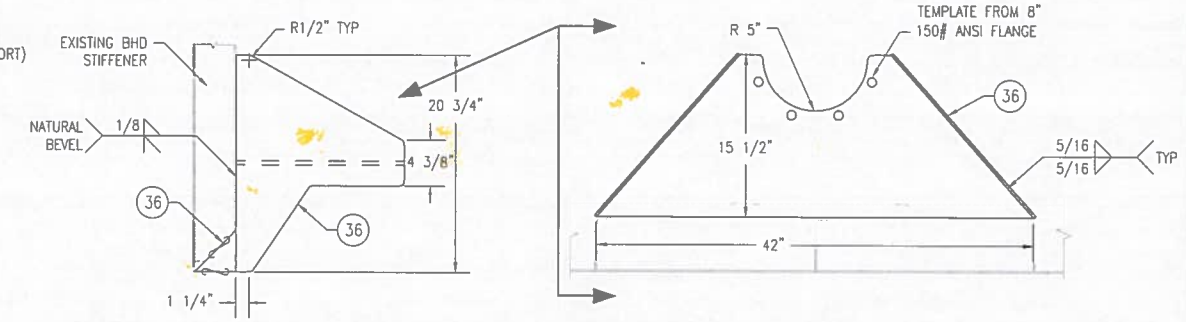

DETAIL 34-C

PORT SSDG SILENCER HANGER PLATE - (PC #34)
SCALE: 1 1/2"= 1'-0"
[19-A]

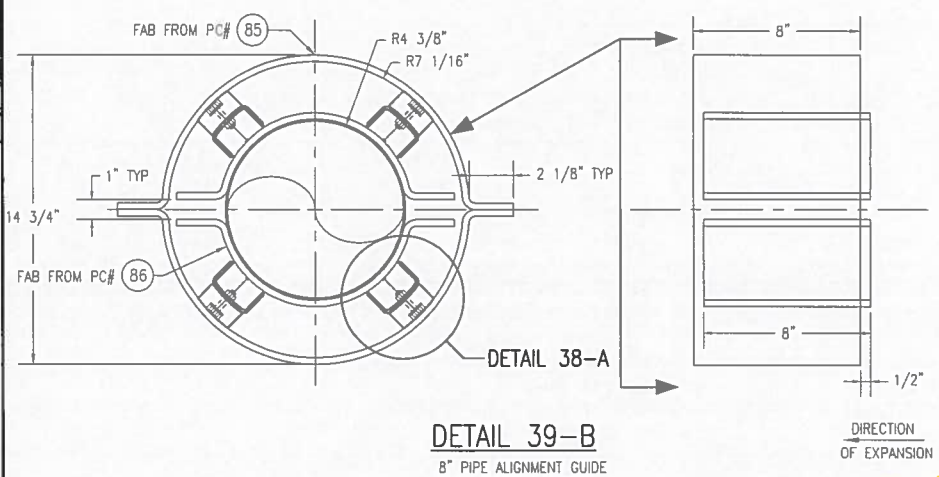

DETAIL 39-B

8" PIPE ALIGNMENT GUIDE
COLD POSITION SHOWN
SCALE: 3"= 1'-0"
[37-C, 39-C]

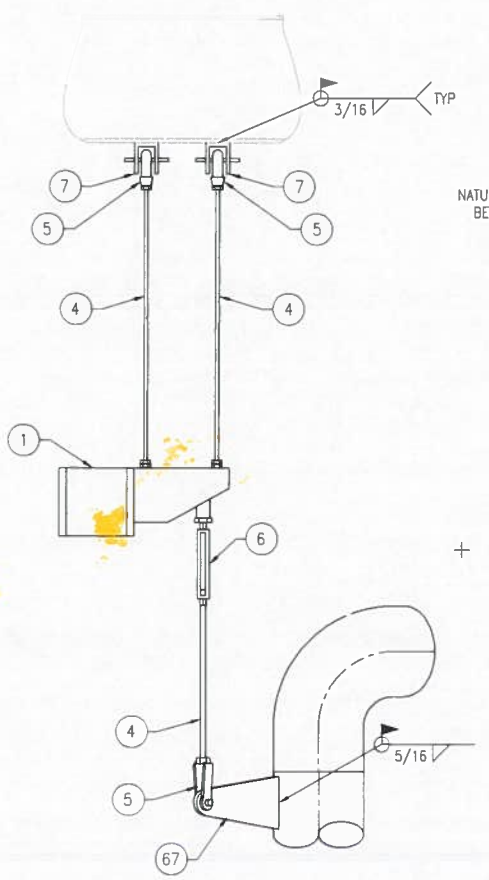

DETAIL 36-A

STBD SSDG SPRING HANGER INSTALLATION
SCALE: 6"= 1'-0"
[19-A] 2 11

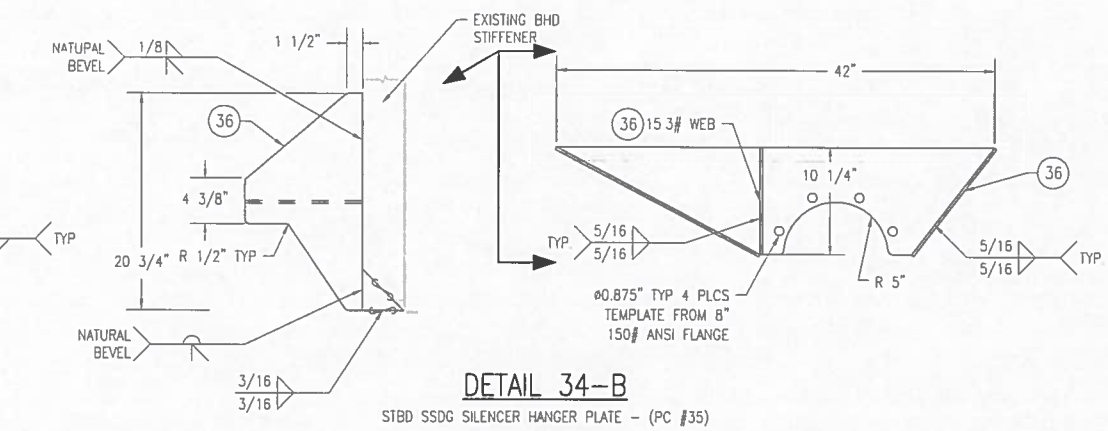

DETAIL 34-B

STBD SSDG SILENCER HANGER PLATE - (PC #35)
SCALE: 1 1/2"= 1'-0"
[19-A]

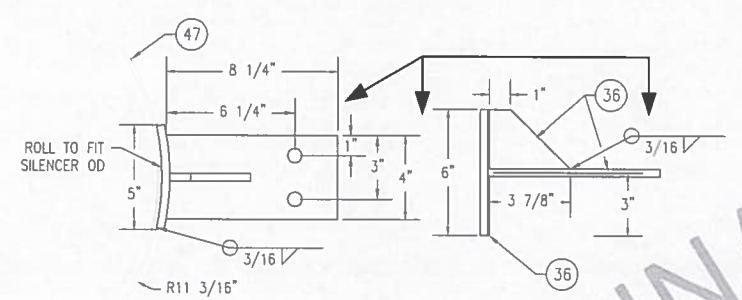

DETAIL 34-A

SILENCER MOUNTING LUG - (PC #59)
SCALE: 6"= 1'-0"
[22-A, 22-C]

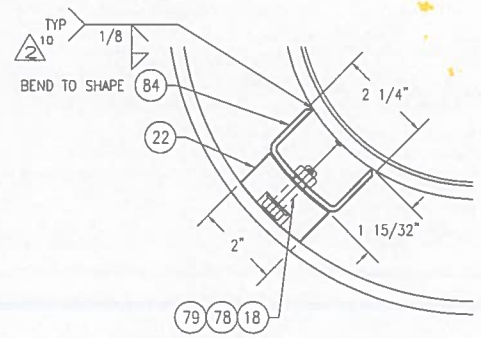

DETAIL 38-A

MODIFICATIONS TO PIPE ALIGNMENT GUIDE
SCALE: 6"= 1'-0"
[53-A]

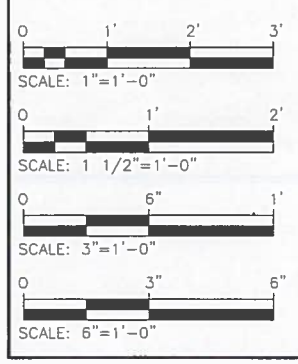

PRELIMINARY

UNITED STATES COAST GUARD — WASHINGTON, D.C. 20593
OFFICE OF NAVAL ENGINEERING
270 FT — WMEC
SLEP CAT C18 SSDG & EDG EXHAUST MODIFICATIONS
SUPPORT DETAILS

SIZE	FSCM CAGE NO.	U.S.C.G. DRAWING NO.	REV
D	81340	905-WMEC-342-003	2
SCALE: AS NOTED		6.00 SQ FT	SHEET 5

ELECTRONIC FILE NAME:
905-WMEC_342_3_1_-_2.dwg

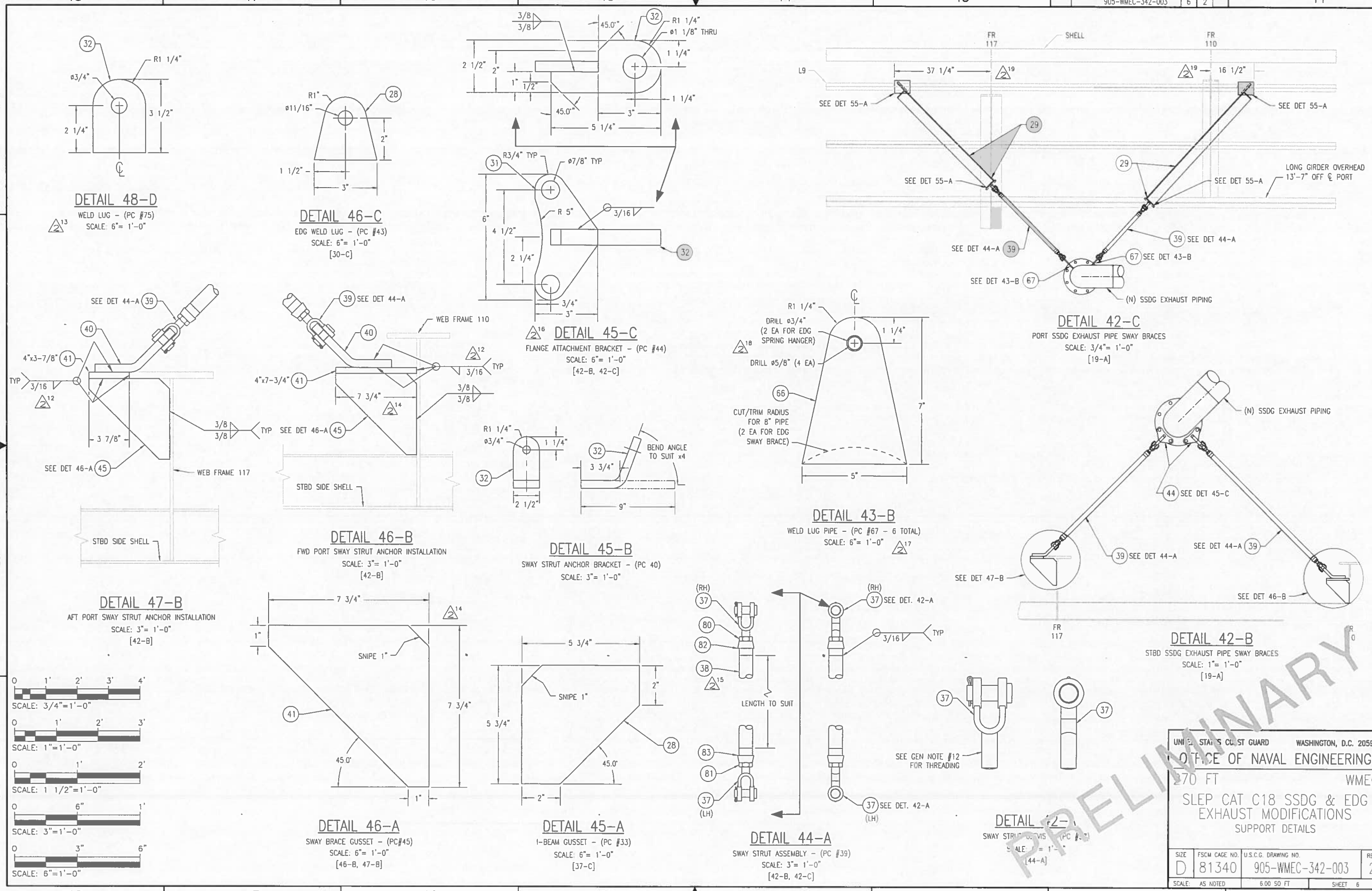

ELECTRONIC FILE NAME:
905-WMEC_342_3_1_-_2 dwg

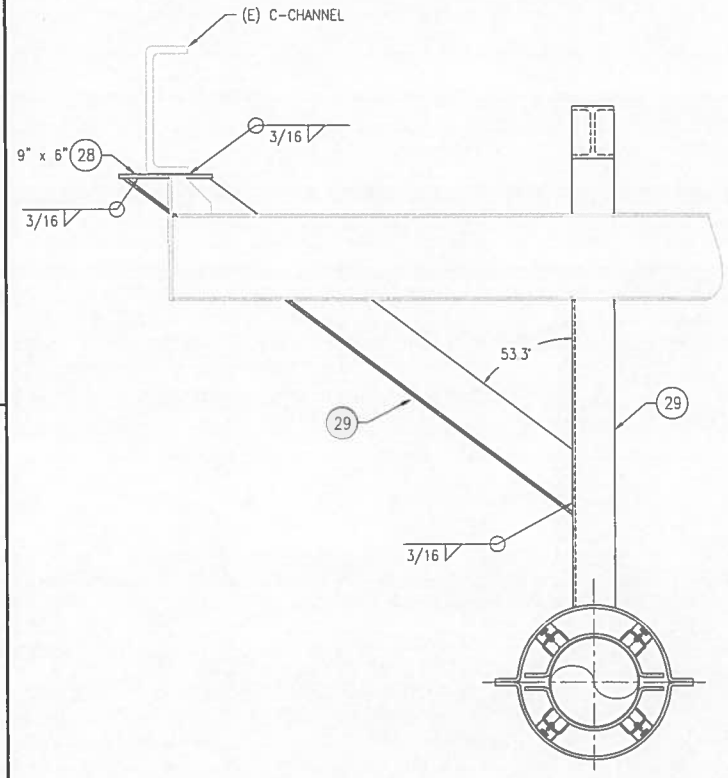

DETAIL 55-C

PORT SSDG EXHAUST PIPE ALIGNMENT GUIDE SUPPORTS LOOKING OUTBOARD
SCALE: 1 1/2"= 1'-0"
[37-C]

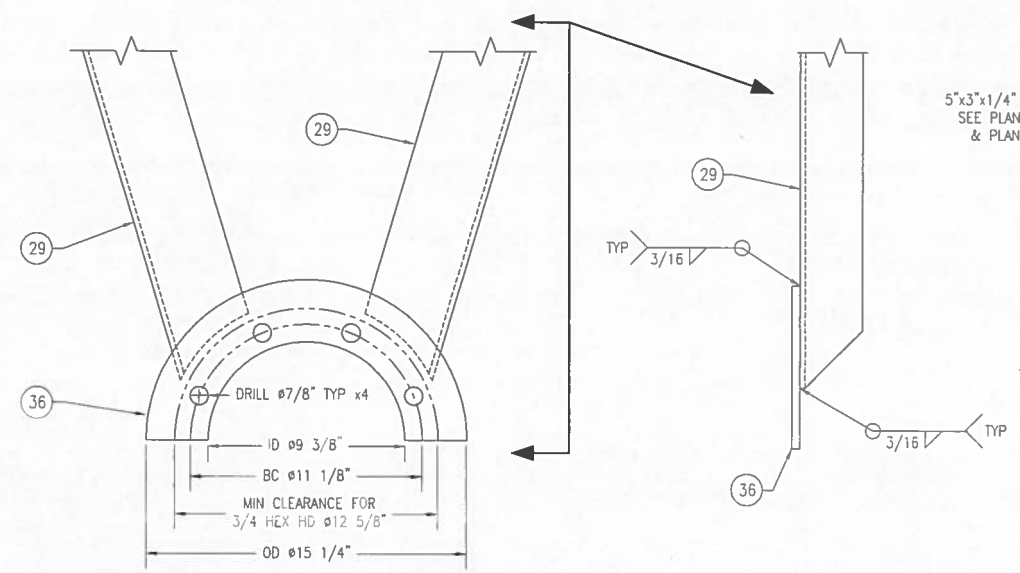

DETAIL 52-C

SILENCER INLET FLANGE BRACKET (PC# 77)
SCALE: 3"= 1'-0"
[19-A]

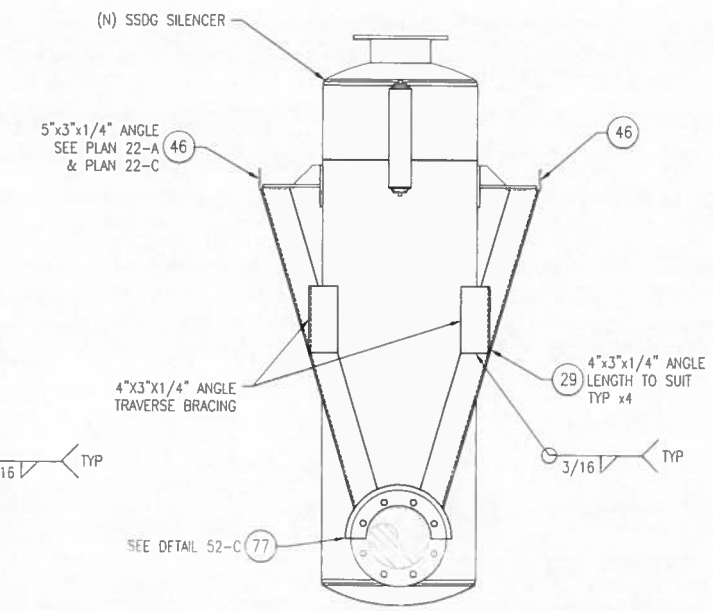

DETAIL 49-C

SILENCER INLET SUPPORT INSTALLATION (TYP x2)
SCALE: 1"= 1'-0"
[19-A]

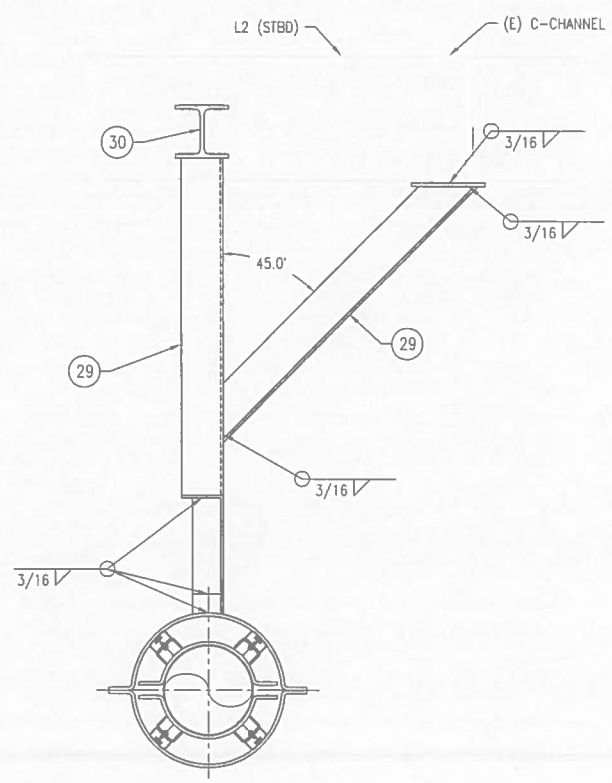

DETAIL 53-A

STBD SSDG EXHAUST PIPE ALIGNMENT GUIDE SUPPORTS LOOKING OUTBOARD
SCALE: 1 1/2"= 1'-0"
[39-C]

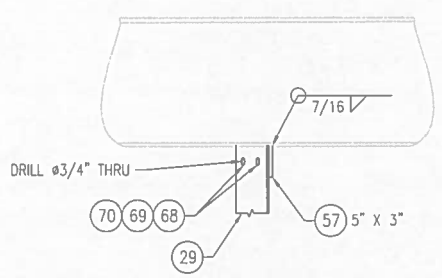

DETAIL 55-A

PORT SSDG EXHAUST PIPE SWAY BRACE SUPPORTS LOOKING OUTBOARD
SCALE: 1 1/2"= 1'-0"
[42-C]

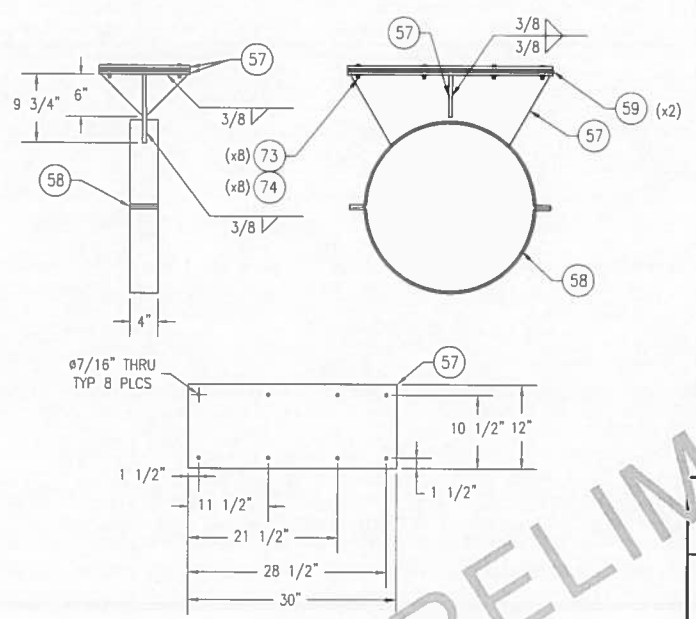

DETAIL 51-A

EDG SILENCER MOUNT
SCALE: 1"= 1'-0"
[28-A, 27-C]

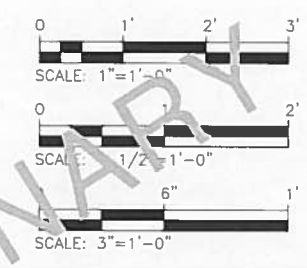

PRELIMINARY

UNITED STATES COAST GUARD WASHINGTON, D.C. 20593
OFFICE OF NAVAL ENGINEERING

270 FT WMEC

SLEP CAT C18 SSDG & EDG EXHAUST MODIFICATIONS
SUPPORT DETAILS

SIZE	FSCM CAGE NO.	U.S.C.G DRAWING NO.	REV
D	81340	905-WMEC-342-003	1
SCALE: AS NOTED		6.00 SQ FT	SHEET 7

ELECTRONIC FILE NAME:
905-WMEC_342_3_1_-_2 dwg