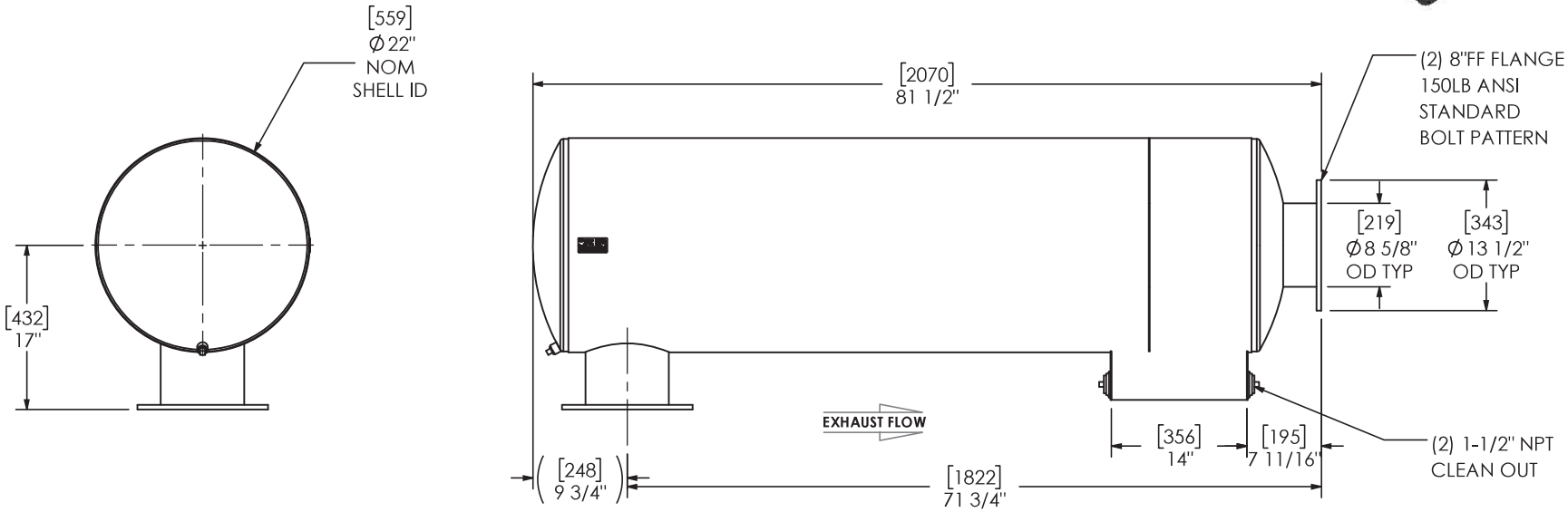

NOTES:

- DO NOT USE EQUIPMENT TO SUPPORT OTHER PARTS OF THE EXHAUST SYSTEM WITHOUT PROPER REINFORCEMENT

MATERIAL CONSTRUCTION:

- 321 STAINLESS STEEL

PAINT:

- NONE
  (MIRATECH COATING SYSTEM 4)

PROJECT NAME	**PROPRIETARY AND CONFIDENTIAL** THE INFORMATION CONTAINED IN THIS DRAWING IS THE SOLE PROPERTY OF MIRATECH GROUP, LLC. ANY REPRODUCTION IN PART OR AS A WHOLE WITHOUT THE WRITTEN PERMISSION OF MIRATECH GROUP, LLC IS PROHIBITED.	DIMENSIONS ARE APPROXIMATE IN INCHES UNLESS OTHERWISE SPECIFIED DIMENSIONAL TOLERANCES UNLESS OTHERWISE SPECIFIED ANGLES MACH: ±2° BEND: ±3° INCHES: ±1/8 MILLIMETERS: ±3 DO NOT SCALE DRAWING	MIRATECH / em PRODUCTS
PROPOSAL NUMBER			**SUCGE0X-08PF-5-0000002T** **Sales Drawing**
SALES ORDER NO.		DRAWN JFH / DATE 12/17/2020	DRAWING SUCGE0X-08PF-5-0000002T SD / REV 0
CUSTOMER P.O.		REVIEWED BY CAC / DATE 12/17/2020	SIZE A / SCALE 1:18 / WEIGHT: 216.229 lb / SHEET 1 OF 1

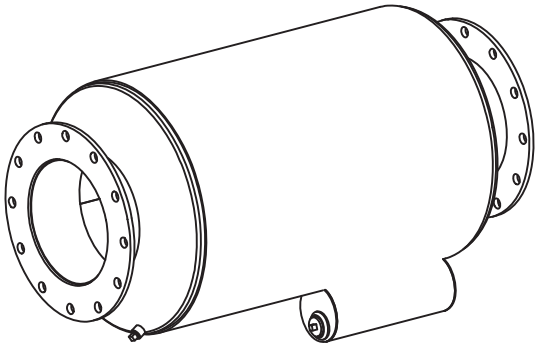

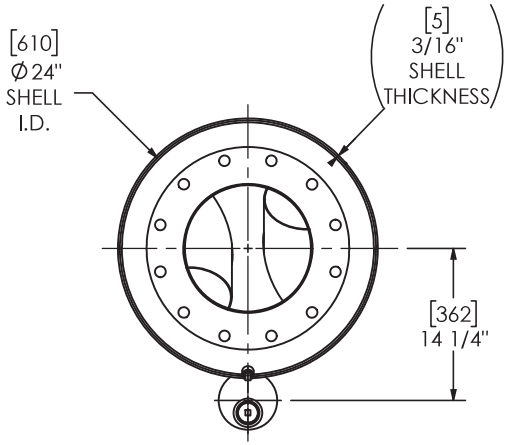

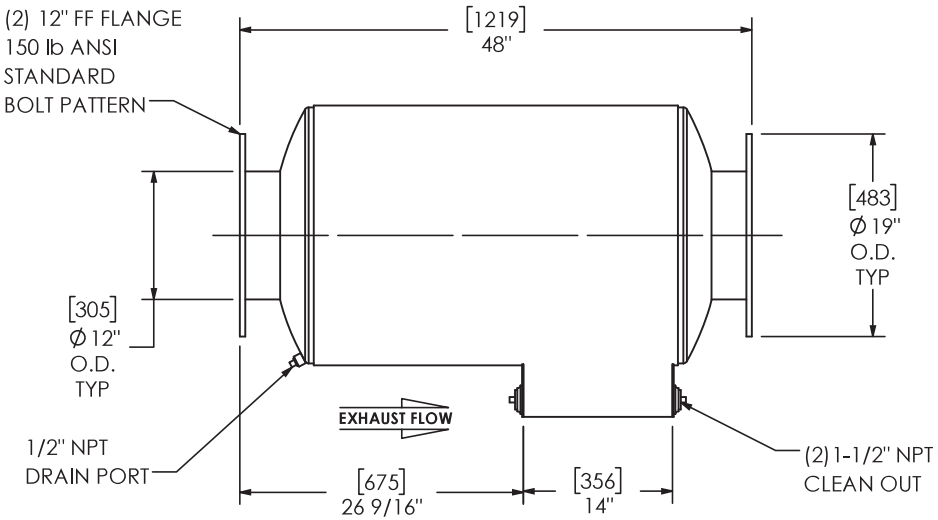

NOTES:

- DO NOT USE EQUIPMENT TO SUPPORT OTHER PARTS OF THE EXHAUST SYSTEM WITHOUT PROPER REINFORCEMENT

MATERIAL CONSTRUCTION:

- 321 STAINLESS STEEL

PAINT:

- NONE
  (MIRATECH COATING SYSTEM 4)

PROJECT NAME **321 SS Silencers**	**PROPRIETARY AND CONFIDENTIAL** THE INFORMATION CONTAINED IN THIS DRAWING IS THE SOLE PROPERTY OF MIRATECH GROUP, LLC. ANY REPRODUCTION IN PART OR AS A WHOLE WITHOUT THE WRITTEN PERMISSION OF MIRATECH GROUP, LLC IS PROHIBITED.	DIMENSIONS ARE APPROXIMATE IN INCHES UNLESS OTHERWISE SPECIFIED DIMENSIONAL TOLERANCES UNLESS OTHERWISE SPECIFIED ANGLES MACH: ±2° BEND: ±3° INCHES: ±1/8 MILLIMETERS: ±3 DO NOT SCALE DRAWING	MIRATECH / em PRODUCTS
PROPOSAL NUMBER **TJ-19-006097**			**SAUEE0Z-12TF-5-19110134** **Sales Drawing**
SALES ORDER NO.		DRAWN SSC / DATE 12/18/2020	DRAWING SAUEE0Z-12TF-5-19110134 SD / REV 0
CUSTOMER P.O.		REVIEWED BY CAC / DATE 12/18/2020	SIZE A / SCALE 1:18 / WEIGHT: 259 lb / SHEET 1 OF 1