DW
98-19525
30554
001
H
004
01
01
U
DA
T
N
D
5

REV STATUS OF SHEETS			REVISIONS				
SH 4	SH 3	SH 2	ZONE	LTR	DESCRIPTION	DATE	APPROVED
G	G	G		G	SERVICE SIGN OFF	00-08-09	MTP
H	H	G		H	SEE ECP 01CE613300	02-05-13	DEP
H	H	G		J	SEE ECP 13CE004000	13-08-19	PBS

CAD MAINTAINED. CHANGES SHALL BE INCORPORATED BY THE DESIGN ACTIVITY.

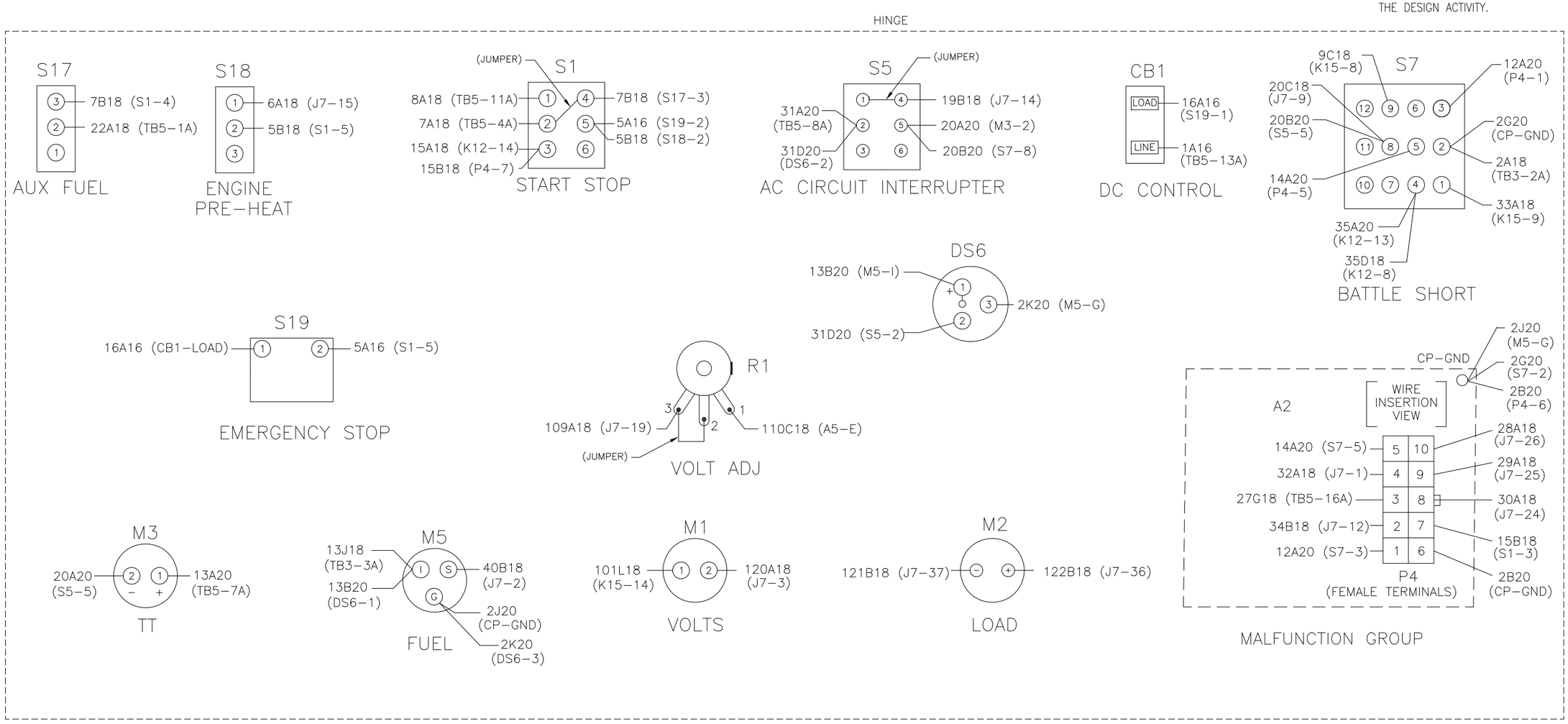

NOTES:

1. INTERPRET DRAWING PER ASME Y14.100.
2. FOR SCHEMATIC DIAGRAM SEE DWG 98-19524.
3. DELETED.
4. FOR TEST POINT FUNCTIONS SEE DIAGNOSTIC TEST PROCEDURE DWG 98-19589.
5. REFERENCE: FOR PLASTIC LAMINATE SEE 98-19587-03 AND -04.

WIRING, CONTROL PANEL

VIEW WITH PANEL OPEN
(REAR VIEW)

FIND NO.	CAGE CODE	DWG SIZE	PART OR IDENTIFYING NO.	QTY REQD	NOMENCLATURE OR DESCRIPTION	SPECIFICATION	MATERIAL

PARTS LIST

DISTRIBUTION STATEMENT A.
APPROVED FOR PUBLIC RELEASE;
DISTRIBUTION IS UNLIMITED.

DOD RELEASE		
	DESIGN	PRODUCTION
AIR FORCE		
ARMY		M. PAYNE
NAVY		
MARINE CORPS		

DRAWING REPOSITORY
U.S. ARMY COMMUNICATION-ELECTRONICS COMMAND
ABERDEEN, PROVING GROUND, MD. 21005

NEXT ASSY	USED ON
98-19503	98-831

APPLICATION

UNLESS OTHERWISE SPECIFIED
DIMENSIONS ARE IN INCHES
TOLERANCES ANGLES ±1°
3 PLACE DECIMALS ± .015
2 PLACE DECIMALS ± .03
FRACTIONS ±

MATERIAL

CONTRACT NO.
DAAK01-96-C-0085

DATE 98-03-06

PREPARED	FPM	98-06-15
CHECKED	MAF	98-08-28
ENGINEER	MAF	98-08-28

DEPT OF DEFENSE PROJECT MANAGER
MOBILE ELECTRIC POWER
DONALD E. PETERSON

DOD PROJECT MANAGER-MOBILE ELECTRIC POWER
WASHINGTON, D.C.

WIRING DIAGRAM,
GENERATOR SET,
3KW, 60 HZ

SIZE	CAGE CODE	DRAWING NO.
D	30554	98-19525

SCALE NONE | REV LETTER J | SHEET 1 OF 4

DW
98-19525
30554
002
G
004
01
01
U
DA
T
N
D
5

REVISIONS				
ZONE	LTR	DESCRIPTION	DATE	APPROVED
	G	SERVICE SIGN OFF	00-08-09	MTP

CAD MAINTAINED. CHANGES SHALL BE INCORPORATED BY THE DESIGN ACTIVITY.

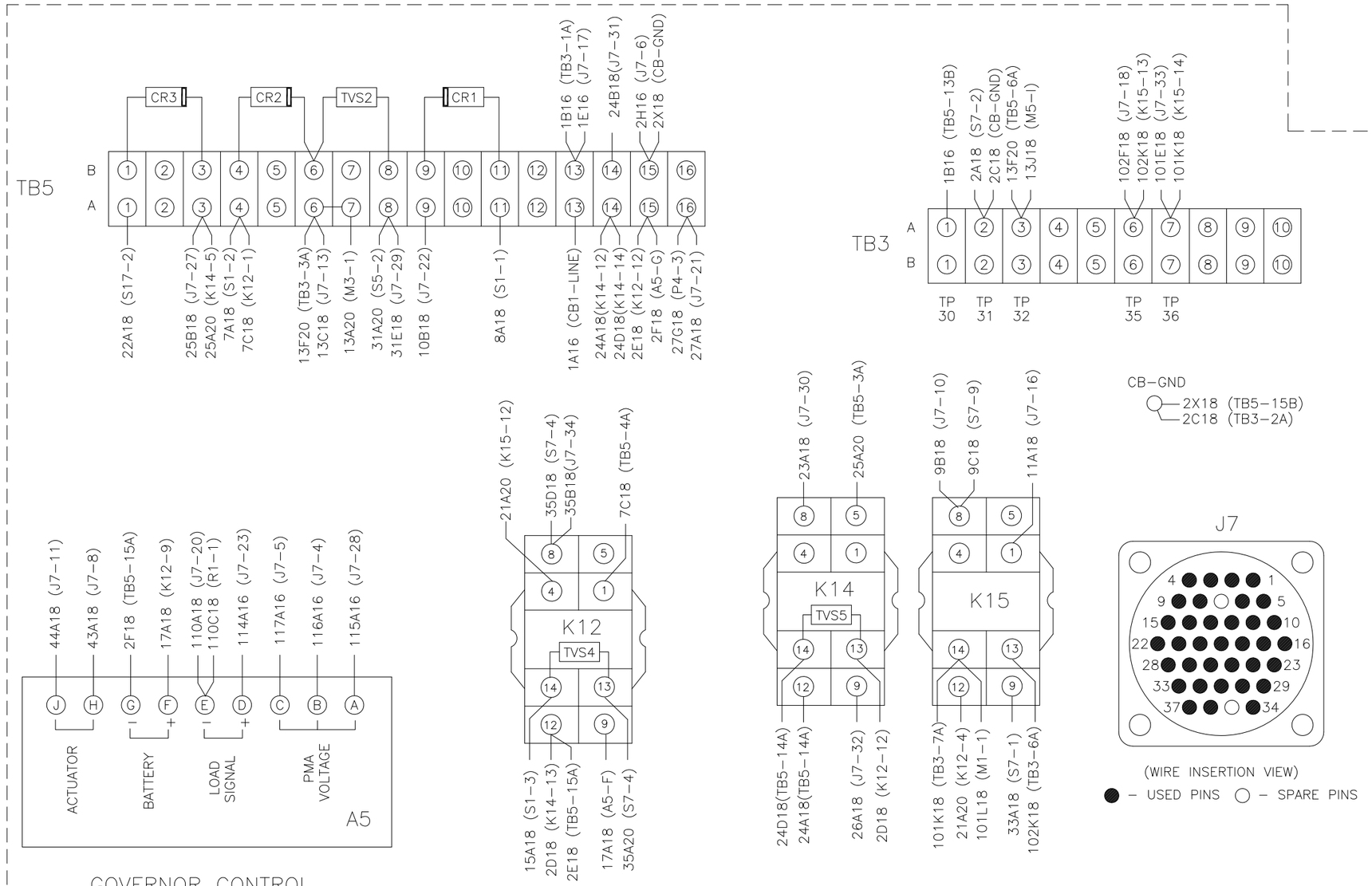

J7

32A18	(P4-4)	→	(J7-1)
40B18	(M5-S)	→	(J7-2)
120A18	(M1-2)	→	(J7-3)
116A16	(A5-B)	→	(J7-4)
117A16	(A5-C)	→	(J7-5)
2H16	(TB5-15B)	→	(J7-6)
SPARE		→	(J7-7)
43A18	(A5-H)	→	(J7-8)
20C18	(S7-8)	→	(J7-9)
9B18	(K15-8)	→	(J7-10)
44A18	(A5-J)	→	(J7-11)
34B18	(P4-2)	→	(J7-12)
13C18	(TB5-6A)	→	(J7-13)
19B18	(S5-4)	→	(J7-14)
6A18	(S18-1)	→	(J7-15)
11A18	(K15-1)	→	(J7-16)
1E16	(TB5-13B)	→	(J7-17)
102F18	(TB3-6A)	→	(J7-18)
109A18	(R1-3)	→	(J7-19)
110A18	(A5-E)	→	(J7-20)
27A18	(TB5-16A)	→	(J7-21)
10B18	(TB5-9A)	→	(J7-22)
114A16	(A5-D)	→	(J7-23)
30A18	(P4-8)	→	(J7-24)
29A18	(P4-9)	→	(J7-25)
28A18	(P4-10)	→	(J7-26)
25B18	(TB5-3A)	→	(J7-27)
115A16	(A5-A)	→	(J7-28)
31E18	(TB5-8A)	→	(J7-29)
23A18	(K14-8)	→	(J7-30)
24B18	(TB5-14B)	→	(J7-31)
26A18	(K14-9)	→	(J7-32)
101E18	(TB3-7A)	→	(J7-33)
35B18	(K12-8)	→	(J7-34)
SPARE		→	(J7-35)
122B18	(M2-(+))	→	(J7-36)
121B18	(M2-(-))	→	(J7-37)

WIRING, CONTROL BOX
(REAR PANEL - INSIDE VIEW)

FIND NO.	CAGE CODE	DWG SIZE	PART OR IDENTIFYING NO.	QTY REQD	NOMENCLATURE OR DESCRIPTION	SPECIFICATION	MATERIAL

PARTS LIST

DOD RELEASE	DESIGN	PRODUCTION
AIR FORCE		
ARMY		M. PAYNE
NAVY		
MARINE CORPS		

DRAWING REPOSITORY
U.S. ARMY COMMUNICATION-ELECTRONICS COMMAND
ATTN: AMSEL-LC-ED-BD
FT. BELVOIR, VA. 22060-5849

NEXT ASSY | USED ON
APPLICATION

UNLESS OTHERWISE SPECIFIED
DIMENSIONS ARE IN INCHES
TOLERANCES ANGLES ±1°
3 PLACE DECIMALS ± .015
2 PLACE DECIMALS ± .03
FRACTIONS ±

MATERIAL

CONTRACT NO. DAAK01-96-C-0085
DATE 98-03-06

PREPARED	FPM	98-06-15
CHECKED	MAF	98-08-28
ENGINEER	MAF	98-08-28

DEPT OF DEFENSE PROJECT MANAGER
MOBILE ELECTRIC POWER
DONALD E. PETERSON

DOD PROJECT MANAGER-MOBILE ELECTRIC POWER
WASHINGTON, D.C.

WIRING DIAGRAM,
GENERATOR SET,
3KW, 60 HZ

SIZE D | CAGE CODE 30554 | DRAWING NO. 98-19525
SCALE NONE | REV LETTER G | SHEET 2 OF

DISTRIBUTION STATEMENT A.
APPROVED FOR PUBLIC RELEASE;
DISTRIBUTION IS UNLIMITED.

DW
98-19525
30554
003
H
004
01
01
U
DA
T
N
D
5

REVISIONS				
ZONE	LTR	DESCRIPTION	DATE	APPROVED
	G	SERVICE SIGN OFF	00-08-09	MTP
	H	SEE ECP 01CE613300	02-05-13	DEP

CAD MAINTAINED. CHANGES SHALL BE INCORPORATED BY THE DESIGN ACTIVITY.

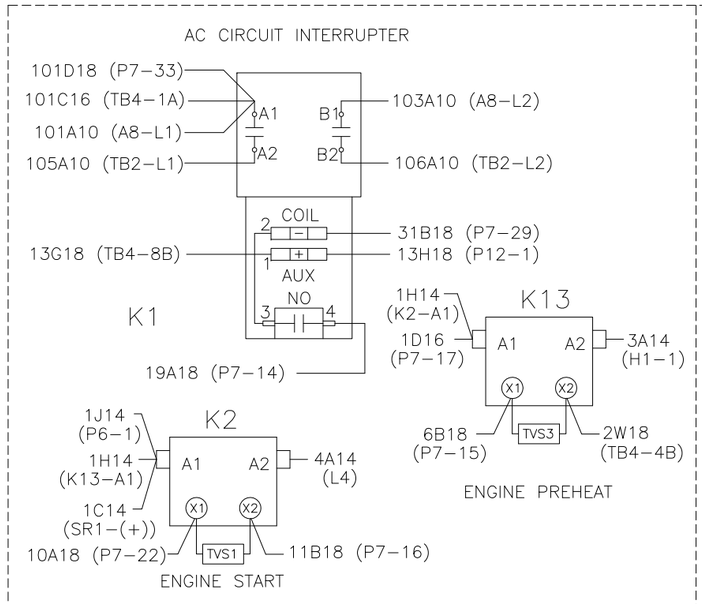

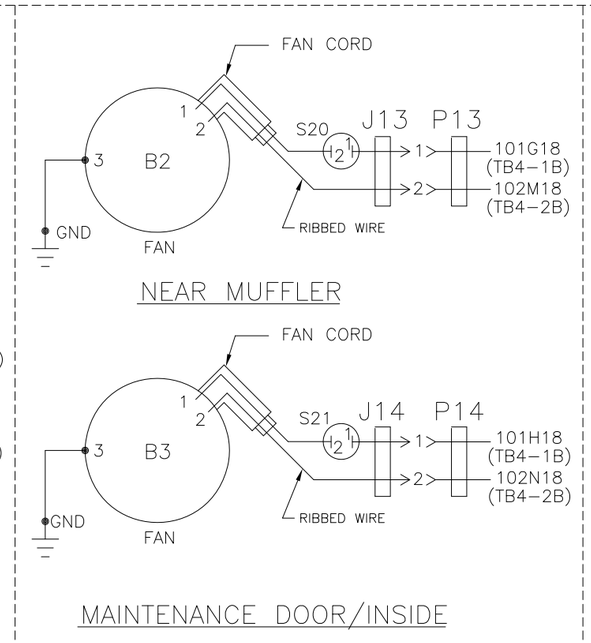

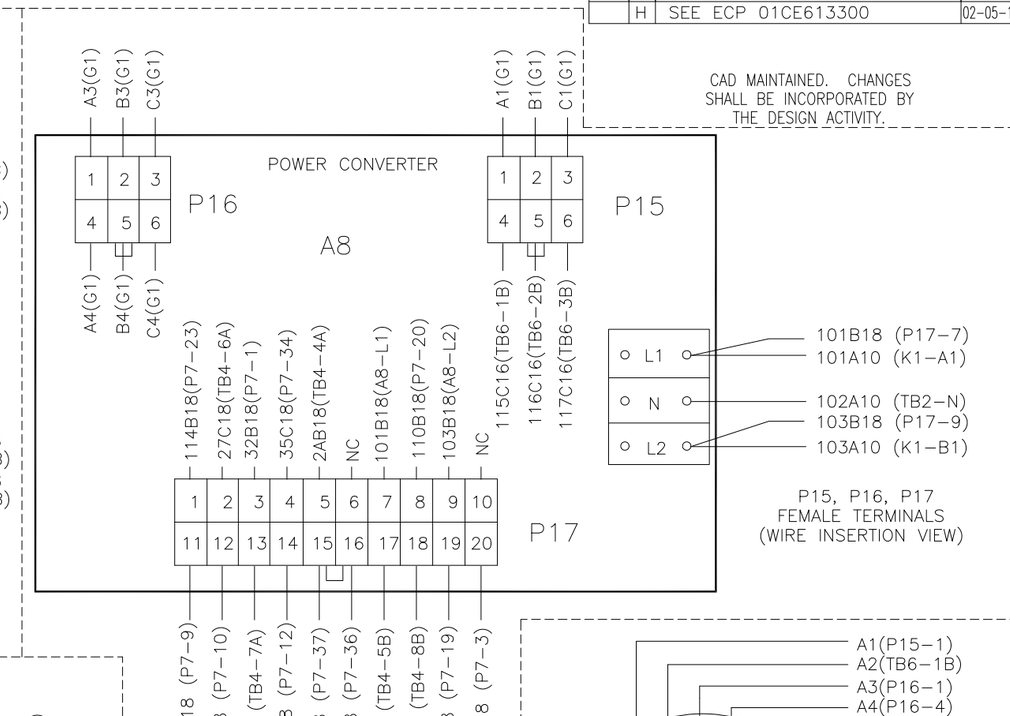

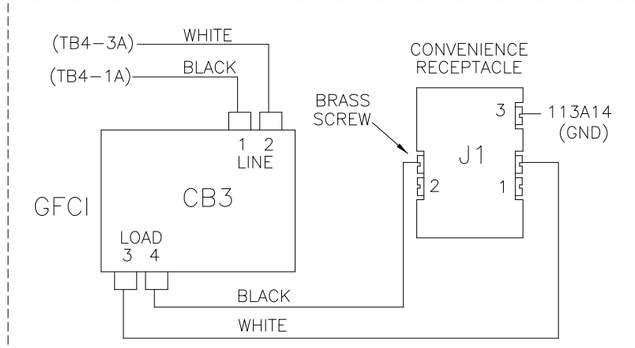

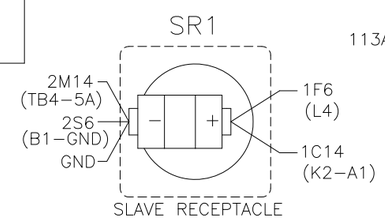

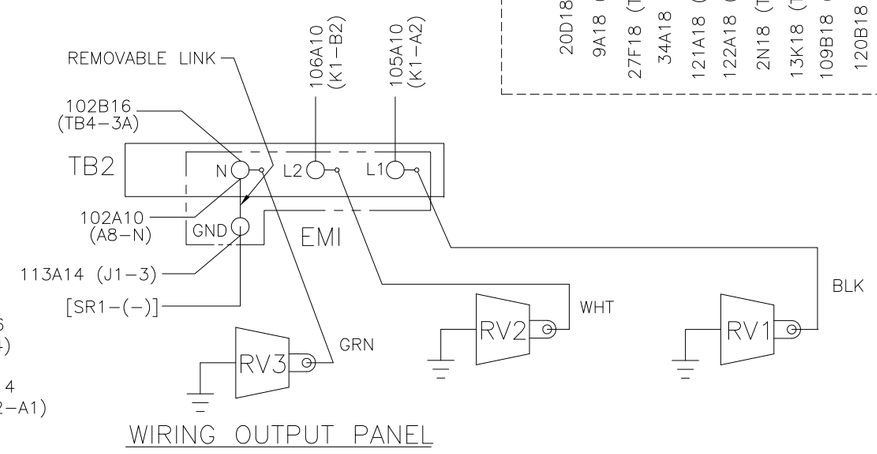

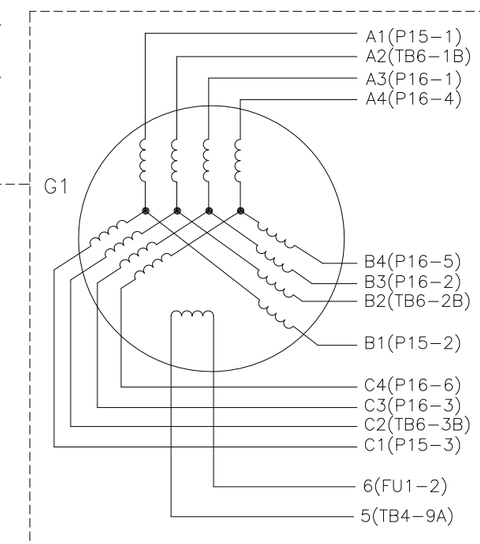

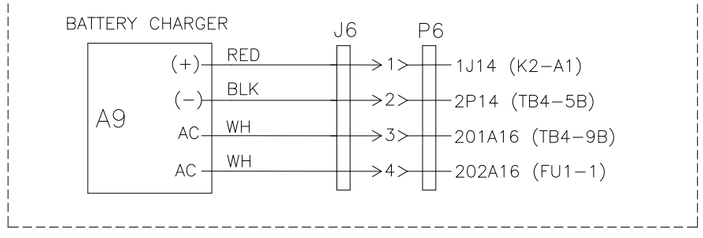

DISTRIBUTION STATEMENT A.
APPROVED FOR PUBLIC RELEASE;
DISTRIBUTION IS UNLIMITED.

DOD RELEASE	DESIGN	PRODUCTION
AIR FORCE		
ARMY		M. PAYNE
NAVY		
MARINE CORPS		

DRAWING REPOSITORY
U.S. ARMY COMMUNICATION-ELECTRONICS COMMAND
ATTN: AMSEL-LC-ED-BD
FT. BELVOIR, VA. 22060-5849

NEXT ASSY	USED ON
APPLICATION	

UNLESS OTHERWISE SPECIFIED
DIMENSIONS ARE IN INCHES
TOLERANCES ANGLES ±1°
3 PLACE DECIMALS ± .015
2 PLACE DECIMALS ± .03
FRACTIONS ±

MATERIAL

FIND NO.	CAGE CODE	DWG SIZE	PART OR IDENTIFYING NO.	QTY REQD	NOMENCLATURE OR DESCRIPTION	SPECIFICATION	MATERIAL

PARTS LIST

CONTRACT NO. DAAK01-96-C-0085
DATE 98-03-06

PREPARED	FPM	98-06-15
CHECKED	MAF	98-08-28
ENGINEER	MAF	98-08-28

DEPT OF DEFENSE PROJECT MANAGER
MOBILE ELECTRIC POWER
DONALD E. PETERSON

DOD PROJECT MANAGER-MOBILE ELECTRIC POWER
WASHINGTON, D.C.

WIRING DIAGRAM, GENERATOR SET, 3KW, 60 HZ

SIZE	CAGE CODE	DRAWING NO.
D	30554	98-19525

SCALE NONE REV LETTER H SHEET 3 OF

DW
98-19525
30554
004
H
004
01
01
U
DATND
5

REVISIONS				
ZONE	LTR	DESCRIPTION	DATE	APPROVED
	G	SERVICE SIGN OFF	00-08-09	MTP
	H	SEE ECP 01CE613300	02-05-13	DEP

CAD MAINTAINED. CHANGES SHALL BE INCORPORATED BY THE DESIGN ACTIVITY.

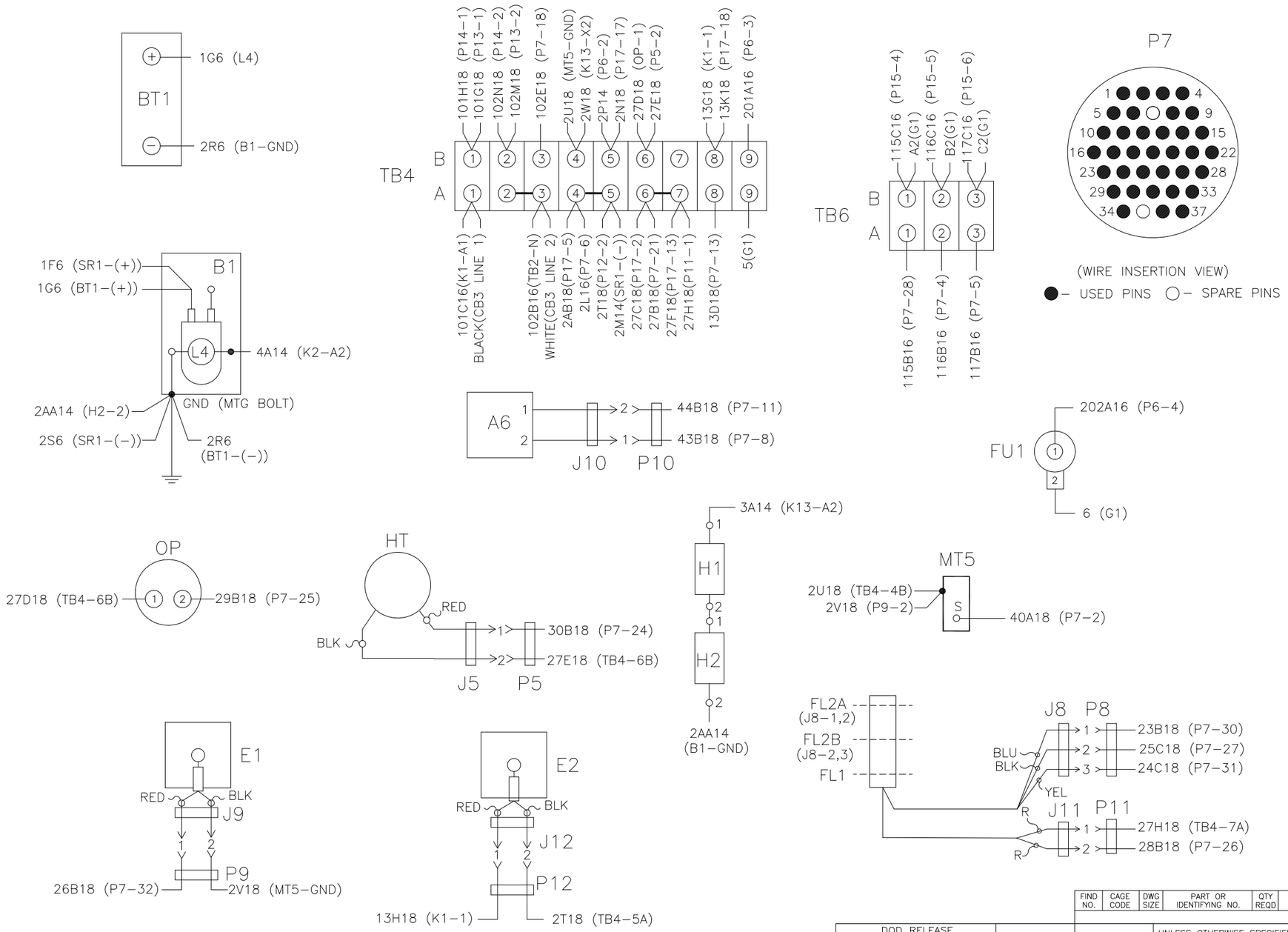

P7

32B18	(P17-3)	(P7-1)
40A18	(MT5-S)	(P7-2)
120B18	(P17-20)	(P7-3)
116B16	(TB6-2A)	(P7-4)
117B16	(TB6-3A)	(P7-5)
2L16	(TB4-4A)	(P7-6)
SPARE		(P7-7)
43B18	(P10-1)	(P7-8)
20D18	(P17-11)	(P7-9)
9A18	(P17-12)	(P7-10)
44B18	(P10-2)	(P7-11)
34A18	(P17-14)	(P7-12)
13D18	(TB4-8A)	(P7-13)
19A18	(K1-NO 4)	(P7-14)
6B18	(K13-X1)	(P7-15)
11B18	(K2-X2)	(P7-16)
1D16	(K13-A1)	(P7-17)
102E18	(TB4-3B)	(P7-18)
109B18	(P17-19)	(P7-19)
110B18	(P17-8)	(P7-20)
27B18	(TB4-6A)	(P7-21)
10A18	(K2-X1)	(P7-22)
114B18	(P17-1)	(P7-23)
30B18	(P5-1)	(P7-24)
29B18	(OP-2)	(P7-25)
28B18	(P11-2)	(P7-26)
25C18	(P8-2)	(P7-27)
115B16	(TB6-1A)	(P7-28)
31B18	(K1-2)	(P7-29)
23B18	(P8-1)	(P7-30)
24C18	(P8-3)	(P7-31)
26B18	(P9-1)	(P7-32)
101D18	(K1-A1)	(P7-33)
35C18	(P17-4)	(P7-34)
SPARE		(P7-35)
122A18	(P17-16)	(P7-36)
121A18	(P17-15)	(P7-37)

WIRING, ENGINE AND FUEL

DISTRIBUTION STATEMENT A.
APPROVED FOR PUBLIC RELEASE;
DISTRIBUTION IS UNLIMITED.

FIND NO.	CAGE CODE	DWG SIZE	PART OR IDENTIFYING NO.	QTY REQD	NOMENCLATURE OR DESCRIPTION	SPECIFICATION	MATERIAL

PARTS LIST

DOD RELEASE	DESIGN	PRODUCTION
AIR FORCE		
ARMY		M. PAYNE
NAVY		
MARINE CORPS		

DRAWING REPOSITORY
U.S. ARMY COMMUNICATION-ELECTRONICS COMMAND
ATTN: AMSEL-LC-ED-BD
FT. BELVOIR, VA. 22060-5849

NEXT ASSY | USED ON
APPLICATION

UNLESS OTHERWISE SPECIFIED DIMENSIONS ARE IN INCHES
TOLERANCES ANGLES ±1°
3 PLACE DECIMALS ± .015
2 PLACE DECIMALS ± .03
FRACTIONS ±

MATERIAL

CONTRACT NO. DAAK01-96-C-0085
DATE 98-03-06

PREPARED	FPM	98-06-15
CHECKED	MAF	98-08-28
ENGINEER	MAF	98-08-28

DEPT OF DEFENSE PROJECT MANAGER MOBILE ELECTRIC POWER
DONALD E. PETERSON

DOD PROJECT MANAGER-MOBILE ELECTRIC POWER
WASHINGTON, D.C.

WIRING DIAGRAM, GENERATOR SET, 3KW, 60 HZ

SIZE	CAGE CODE	DRAWING NO.
D	30554	98-19525

SCALE NONE | REV LETTER H | SHEET 4 OF