APPROVED SOURCE(S) OF SUPPLY		
CAGE CODE	PART NO.	VENDOR
80XL1	L70N6EZ0T9EAFD	YANMAR DIESEL AMERICA CORP 101 INTERNATIONAL PARKWAY ADAIRSVILLE, GA 30103

REVISIONS				
ZONE	LTR	DESCRIPTION	DATE	APPROVED
	–	SEE ECP NO. 18HE000500	18-01-25	NPJ
	A	SEE ECP NO. 21HE002800	21-08-06	CRG
	B	SEE ECP NO. 24CE003500	24-11-12	SDE

CAD MAINTAINED. CHANGES SHALL BE INCORPORATED BY THE DESIGN ACTIVITY.

NOTES:

1. INTERPRET DRAWING PER ASME Y14.100.

2. ENGINE CONFIGURATION AND ACCESSORIES
THE ENGINE ASSEMBLY SHALL CONFORM TO THE CONFIGURATION SHOWN ON THIS DRAWING WITH THE FOLLOWING EQUIPMENT AND ACCESSORIES SUPPLIED AND INSTALLED BY YANMAR:

24V STARTER (P/N: 11436277991) (SHIPPED SEPARATELY)
TAPER SHAFT
GENERATOR MOUNTING PAD
SHAFT BALANCER
FLYWHEEL WITHOUT BATTERY CHARGING ALTERNATOR
DRY TYPE AIR CLEANER
MANIFOLD AIR HEATER (24V)
OIL FILTER
MANUAL RECOIL STARTER
AUTO-RETURN DECOMPRESSOR
FUEL INJECTION PUMP
FUEL INJECTION NOZZLE
MECHANICAL GOVERNOR
AIR FILTER (P/N:114250-12581)

3. ENGINE SPECIFICATIONS

MODEL:	L70N6EZ0T9EAFD
TYPE:	AIR COOLED, 4-CYCLE DIESEL
NO. OF CYLINDERS:	ONE
BORE X STROKE MM / IN:	78 X 67 / 3.071 X 2.64
TOTAL DISPLACEMENT CC / CU IN:	320 / 19.5
NET INTERMITTENT HP / RPM:	6.7 / 3600
NET CONTINUOUS HP / RPM:	5.9 / 3600
DRY WEIGHT WITH AIR CLEANER & STARTER:	90.4 LBS
AUDIO NOISE @ 7M FULL LOAD 3600 RPM:	94.5 DBA @ 1M
ENGINE DERATING FACTORS	
ALTITUDE:	1.88% PER 1000 FT ABOVE SEA LEVEL
TEMPERATURE:	1.73% PER 10°F ABOVE 77°F
JP-8 FUEL:	15%

THE ENGINE INJECTION TIMING AND MAXIMUM FUEL STOP WILL BE ADJUSTED BY YANMAR AT THE FACTORY TO 17° ±1° B.T.D.C. AND (1) TURN (INCREASE) ON THE FUEL STOP.

4. ENGINE REQUIREMENTS
THE ENGINE SHALL MEET THE APPLICABLE REQUIREMENTS OF PD 6115-0076A 21 FEBRUARY 1996 AND SCN #1 DATED APRIL 1, 1996 WHEN INSTALLED IN MEP-831 OR MEP-832 GENERATOR SET.

A. STARTING. THE SET SHALL START (6.3.3) WITHIN 5 MINUTES WITH THE BATTERY AND WITHOUT THE BATTERY IF A MANUAL START IS PROVIDED UNDER ANY COMBINATION OF THE FOLLOWING CONDITIONS:

1. AT AMBIENT TEMPERATURES FROM -25°F TO +120°F USING THE ELECTRIC START, +20°F TO +120°F USING THE MANUAL START, AT ANY POSSIBLE HUMIDITY.

2. AT ALTITUDES UP TO AND INCLUDING 8,000 FEET ABOVE SEA LEVEL.

3. WITH THE BASE OF THE SET IN PLANES FROM LEVEL UP TO 15 DEGREES FROM LEVEL.

4. WITH UP TO 5 INCHES OF RAIN PER HOUR IMPINGING ON THE SET AT ANGLES FROM THE VERTICAL UP TO AND INCLUDING 90 DEGREES FROM THE VERTICAL.

5. WITH UP TO 355 BRITISH THERMAL UNITS (BTUs) PER SQUARE FOOT PER HOUR OF SOLAR RADIATION.

6. WITH A SAND/DUST PARTICLE CONCENTRATION OF UP TO 1,400 MG PER CUBIC METER. PARTICLE SIZES SHALL RANGE FROM LESS THAN 74 MICROMETERS IN DIAMETER TO 1,000 MICROMETERS, WITH THE BULK OF THE PARTICLES RANGING IN SIZE FROM 74 TO 350 MICROMETERS.

7. WITH A STEADY WINDSPEED OF UP TO 73 FEET PER SECOND AND GUSTS UP TO 95 FEET PER SECOND AT A HEIGHT OF 10 FEET ABOVE GROUND LEVEL.

8. WITH ACCUMULATIONS OF ICE GLAZE, FREEZING RAIN AND HOARFROST OF UP TO 0.5 INCH AND UP TO A SPECIFIC GRAVITY OF 0.9.

9. IN A SALT FOG OR SEA-SPRAY ENVIRONMENT.

10. WITH FUELS, LUBRICANTS, AND COOLANTS SPECIFIED IN 3.11.

B. OPERATING. IMMEDIATELY AFTER STARTING AND WITH A 5 MINUTE (MAXIMUM) WARM-UP PERIOD AT NO LOAD OPERATION; THE SET SHALL OPERATE WITHOUT DAMAGE OR FAILURE AT ALL LOADS, CONTINUOUS AND INTERMITTENT, UP TO AND INCLUDING RATED LOAD UNDER ANY OF THE CONDITIONS OR COMBINATIONS OF THE CONDITIONS SPECIFIED IN NOTE 4A, EXCEPT THAT:

SET RATED LOAD MAY BE DERATED UP TO 3.33% FOR EACH 1000 FT ABOVE 100 FT.

SET RATED LOAD MAY BE DERATED UP TO 1% FOR EACH 10°F ABOVE 107.°F

AT 4000 FEET AND 95°F, SET DERATING SHALL NOT EXCEED 10%.

AT 8000 FEET AND 95°F, SET DERATING SHALL NOT EXCEED 23.3%.

C. LIFE (ENDURANCE) REQUIREMENTS. THE SET SHALL OPERATE FOR 1500 HOURS WITHOUT CRITICAL FAILURE AT ALL LOADS, CONTINUOUS AND INTERMITTENT, UP TO AND INCLUDING RATED LOAD UNDER ALL OF THE CONDITIONS SPECIFIED IN NOTE 4B. THE SET SHALL HAVE A MINIMUM LIFE OF NOT LESS THAN 6000 HOURS.

(NOTES CONTINUED ON SHT 2)

SOURCE CONTROL DRAWING

THIS IS AN AutoCAD® DRAWING. DO NOT MANUALLY UPDATE

DISTRIBUTION STATEMENT A.
APPROVED FOR PUBLIC RELEASE; DISTRIBUTION IS UNLIMITED.

DOD RELEASE				
	DESIGN	PRODUCTION		
AIR FORCE				
ARMY		M. PAYNE		
NAVY				
MARINE CORPS			98-19505	98-832
			98-19505	98-831
DRAWING REPOSITORY U.S. ARMY COMMUNICATION-ELECTRONICS RESEARCH, DEVELOPMENT & ENGINEERING CENTER ABERDEEN, PROVING GROUND, MD. 21005			NEXT ASSY	USED ON
			APPLICATION	

UNLESS OTHERWISE SPECIFIED DIMENSIONS ARE IN INCHES
TOLERANCES ANGLES ± 1°
3 PLACE DECIMALS ± .015
2 PLACE DECIMALS ± .03
FRACTIONS ± –

MATERIAL

CONTRACT NO. – W909MY-12-D-0018

DATE _____

PREPARED	VP	18-02-14
CHECKED	RB	18-02-14
ENGINEER	KRH	18-02-14

DEPT OF DEFENSE PROJECT MANAGER EXPEDITIONARY ENERGY & SUSTAINMENT SYSTEMS

DONALD E. PETERSON

DOD PROJECT MANAGER, EXPEDITIONARY ENERGY & SUSTAINMENT SYSTEMS WASHINGTON, D.C.

ENGINE, DIESEL

SIZE	CAGE CODE	DRAWING NO.
D	30554	98-19521
SCALE 1/2	REV LETTER B	SHEET 1 OF 5

MEH 12/9/2024 10:21 AM

CAD MAINTAINED. CHANGES SHALL BE INCORPORATED BY THE DESIGN ACTIVITY.

NOTES: (CONTINUED)

D. FUELS AND LUBRICANTS. NO MANUAL ADJUSTMENT IS ALLOWED WHEN CHANGING FUEL TYPE. THE SET, WHILE OPERATING ON GRADE LOW SULFUR NO. 1-D, OR GRADE LOW SULFUR NO. 2-D DIESEL FUEL CONFORMING TO COMMERICAL ITEM DESCRIPTION (CID) ASTM-D975; OR JP-8 TURBINE FUEL CONFORMING TO MIL-DTL-83133; SHALL MEET ALL REQUIREMENTS HEREIN. THE TOTAL PARTICULATE LEVEL OF THE FUEL SHALL NOT EXCEED 20 MG/L. THE ENGINE SHALL OPERATE ON LUBRICATING OIL CONFORMING TO MIL-PRF-2104 OR MIL-PRF-7808 WHEN TEMPERATURES ARE ABOVE -15°F, TO MIL-PRF-46167 WHEN TEMPERATURES ARE AT OR BELOW +40°F. GEAR OIL SHALL CONFORM TO SAE-J2360 AND GREASE SHALL CONFORM TO MIL-G-10924.

E. FLEXURAL VIBRATION AND CRITICAL SPEEDS. THE SET SHALL BE FREE FROM DANGEROUS FLEXURAL VIBRATIONS AND DANGEROUS TORSIONAL CRITICAL SPEEDS BETWEEN THE MINIMUM LOW IDLE SPEED AND 115% OF RATED SPEED.

F. MAXIMUM POWER. THE MINIMUM ACCEPTABLE MAXIMUM POWER SHALL BE 110% PERCENT OF RATED LOAD FOR NOT MORE THAN 2.5 MINUTES UNDER ALL OPERATING CONDITIONS SPECIFIED HEREIN. PRODUCTION SETS SHALL HAVE A MAXIMUM POWER OF NOT LESS THAN 2 PERCENT BELOW THE AVERAGE MAXIMUM POWER MEASURED FOR THE PREPRODUCTION QUALIFICATION TEST (PQT) SETS WHEN CORRECTED FOR THE SAME CONDITIONS.

G. ENGINE. THE ENGINE SHALL HAVE A MINIMUM CONTINUOUS DUTY OUTPUT RATING CORRESPONDING TO THE APPLICABLE SET LOAD RATING AT ALL OPERATING CONDITIONS SPECIFIED HEREIN UP TO AND INCLUDING 8,000 FEET AT 95°F. THE ENGINE, WITH THE TIMING ADVANCED TO 17, WILL NOT BE CARB CERTIFIABLE. THE ENGINE SHALL BE PROTECTED AGAINST DAMAGE RESULTING FROM OVERSPEED CONDITIONS IN EXCESS OF 115 PERCENT OF RATED SPEED.

H. TIMING MARKS. TIMING MARKS SHALL BE CLEARLY VISIBLE AND UTILIZED TO PERFORM PROPER SERVICING, ADJUSTMENT OR REPLACEMENT OF ENGINE COMPONENTS.

I. LUBRICATING SYSTEM. THE SET SHALL MEET ALL REQUIREMENTS HEREIN USING LUBRICANTS SPECIFIED IN NOTE 4D. THE LUBRICATING SYSTEM SHALL BE PROVIDED WITH SEALS, GASKETS, AND BEARING CLEARANCES TO PERMIT USE OF ARCTIC LUBRICATING OIL CONFORMING TO MIL-PRF-46167. THE LUBRICATING SYSTEM SHALL BE COMPATIBLE WITH MIL-PRF-21260 PRESERVATION OIL. THE OIL TEMPERATURE IN THE OIL SUMP SHALL STABILIZE AT THE TEMPERATURE RECOMMENDED BY THE ENGINE MANUFACTURER UNDER FULL LOAD AT ALL CONDITIONS SPECIFIED HEREIN. AT REDUCED LOADS, INCLUDING NO LOAD, MINIMUM OIL TEMPERATURE SHALL NOT BE LESS THAN 80°F. THE OIL-LEVEL BAYONET GAGE SHALL BE MARKED TO ACCURATELY INDICATE FULL AND LOW OIL-LEVEL, WITH THE SET IN A LEVEL POSITION. THE BAYONET GAGE SHALL BE PLACED IN A READILY ACCESSIBLE LOCATION. A CAPTIVE FILLER CAP SHALL BE PROVIDED EXCEPT IN THE CASE WHERE THE CAP AND DIPSTICK ARE OF AN INTEGRAL DESIGN.

J. MANUAL TURNING. PROVISION SHALL BE MADE TO PERMIT MANUAL TURNING OF THE ENGINE CRANKSHAFT AND ASSOCIATED PARTS SO THAT INSPECTION AND MAINTENANCE OF PARTS REQUIRING REFERENCE TO THE CRANK ANGLE CAN BE MADE. MANUAL TURNING BY BARRING ON THE FLYWHEEL RING GEAR, THE GENERATOR COUPLING, OR THE GENERATOR FAN IS NOT PERMITTED.

K. STARTING AIDS. STARTING AIDS, IF USED, SHALL BE COMPATIBLE WITH THE PRIMARY BATTERY VOLTAGE. REDUCED VOLTAGE TYPE GLOW PLUGS OR ETHER INJECTION SYSTEMS SHALL NOT BE UTILIZED. THE STARTING AID SYSTEM SHALL NOT BE REQUIRED FOR THE SET STARTING AT TEMPERATURES AT OR ABOVE +20°F.

L. STARTING SYSTEM. AN ELECTRICAL 24 VDC STARTING SYSTEM SHALL BE PROVIDED WITH THE SET. THE SET SHALL BE PROVIDED WITH A MANUAL STARTING SYSTEM IN ADDITION TO THE ELECTRICAL 24 VDC STARTING SYSTEM. IF BOTH STARTING SYSTEMS ARE PROVIDED ON THE SET THE ELECTRICAL STARTING SYSTEM SHALL NOT PREVENT STARTING WITH THE MANUAL STARTING SYSTEM.

M. MANUAL STARTING SYSTEMS. THE MANUAL STARTING SYSTEM SHALL BE EQUIPPED TO MANUALLY START THE SET WITHOUT THE USE OF ANY ELECTRICAL STARTING ASSISTANCE EITHER INTERNAL OR EXTERNAL TO THE SET. THE ROPE PULL START SYSTEM USED SHALL HAVE A MEANS TO AUTOMATICALLY REWIND THE ROPE. THE MANUAL STARTING SYSTEM SHALL BE ABLE TO START THE SET AT TEMPERATURES OF +20°F AND ABOVE. THE MANUAL FORCE REQUIRED TO START THE SET SHALL NOT EXCEED THE REQUIREMENTS SPECIFIED IN MIL-STD-1472 FOR FEMALE OPERATORS, THE MANUAL STARTING SYSTEM SHALL BE EASILY REPLACEABLE WITHOUT THE REMOVAL OF THE ENGINE.

5. ONLY THE ITEM DESCRIBED ON THIS DRAWING WHEN PROCURED FROM THE VENDOR(S) LISTED HEREON IS APPROVED BY THE PROJECT MANAGER EXPEDITIONARY ENERGY & SUSTAINMENT SYSTEMS, 5850 DELAFIELD ROAD, BUILDING 324, FORT BELVOIR, VA. 22060, FOR USE IN THE APPLICATION SPECIFIED HEREON. A SUBSTITUTE ITEM SHALL NOT BE USED WITHOUT PRIOR APPROVAL BY PROJECT MANAGER EXPEDITIONARY ENERGY & SUSTAINMENT SYSTEMS.

6. IDENTIFICATION OF THE APPROVED SOURCE(S) OF SUPPLY HEREON IS NOT TO BE CONSTRUED AS A GUARANTEE OF PRESENT OR CONTINUED AVAILABILITY AS A SOURCE OF SUPPLY FOR THE ITEM(S) DESCRIBED ON THE DRAWING.

7. IDENTIFY IN ACCORDANCE WITH MIL-STD-130, METHOD OPTIONAL.

8. THE ENGINE WHEN PROCURED AS A SPARE PART, MUST BE SUPPLIED WITH AN ITEM UNIQUE IDENTIFICATION (IUID) PLATE, DRAWING NO. 88-22843-10. TO BE LOCATED BY MANUFACTURER.

9. THE APPROVED SOURCE(S) HEREON HAS BEEN TESTED AND QUALIFIED. USE SOURCE QUALIFICATION PROCEDURE SQ 98-19521 WHEN QUALIFYING ADDITIONAL SOURCES.

THIS IS AN AutoCAD® DRAWING. DO NOT MANUALLY UPDATE

DISTRIBUTION STATEMENT A.
APPROVED FOR PUBLIC RELEASE; DISTRIBUTION IS UNLIMITED.

SOURCE CONTROL DRAWING

DOD PROJECT MANAGER, EXPEDITIONARY ENERGY & SUSTAINMENT SYSTEMS WASHINGTON, D.C.			
SIZE	CAGE CODE	DRAWING NO.	
D	30554	98-19521	
SCALE 1/2	REV LETTER B	SHEET 2	

MEH 12/9/2024 10:21 AM

CAD MAINTAINED. CHANGES SHALL BE INCORPORATED BY THE DESIGN ACTIVITY.

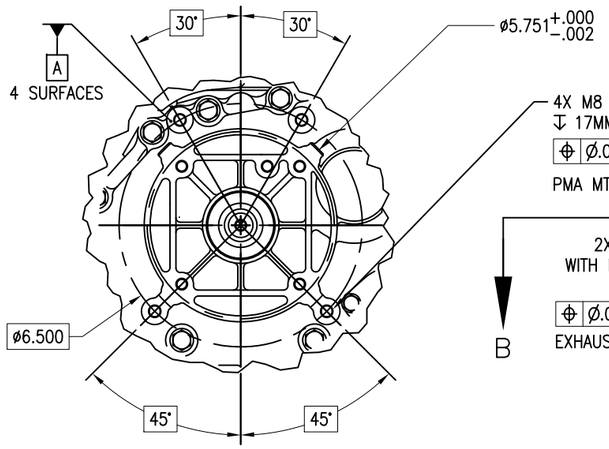

VIEW A

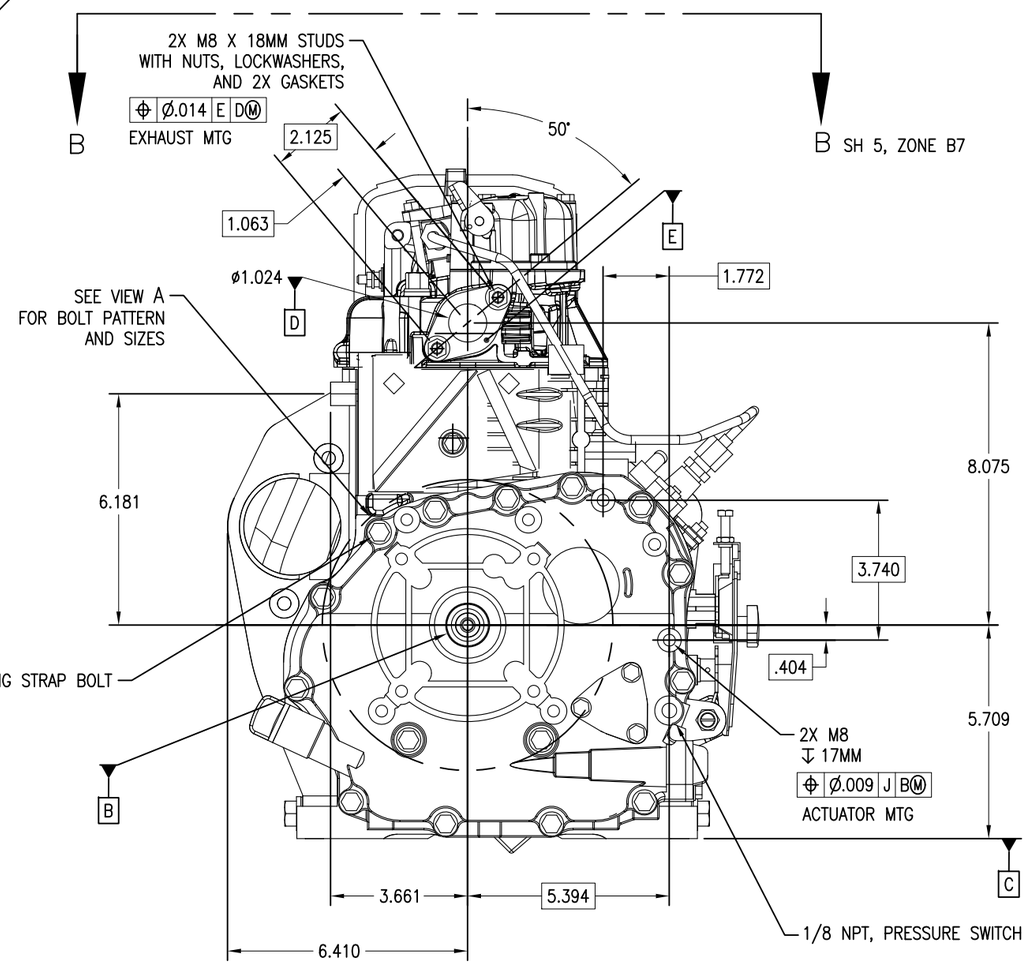

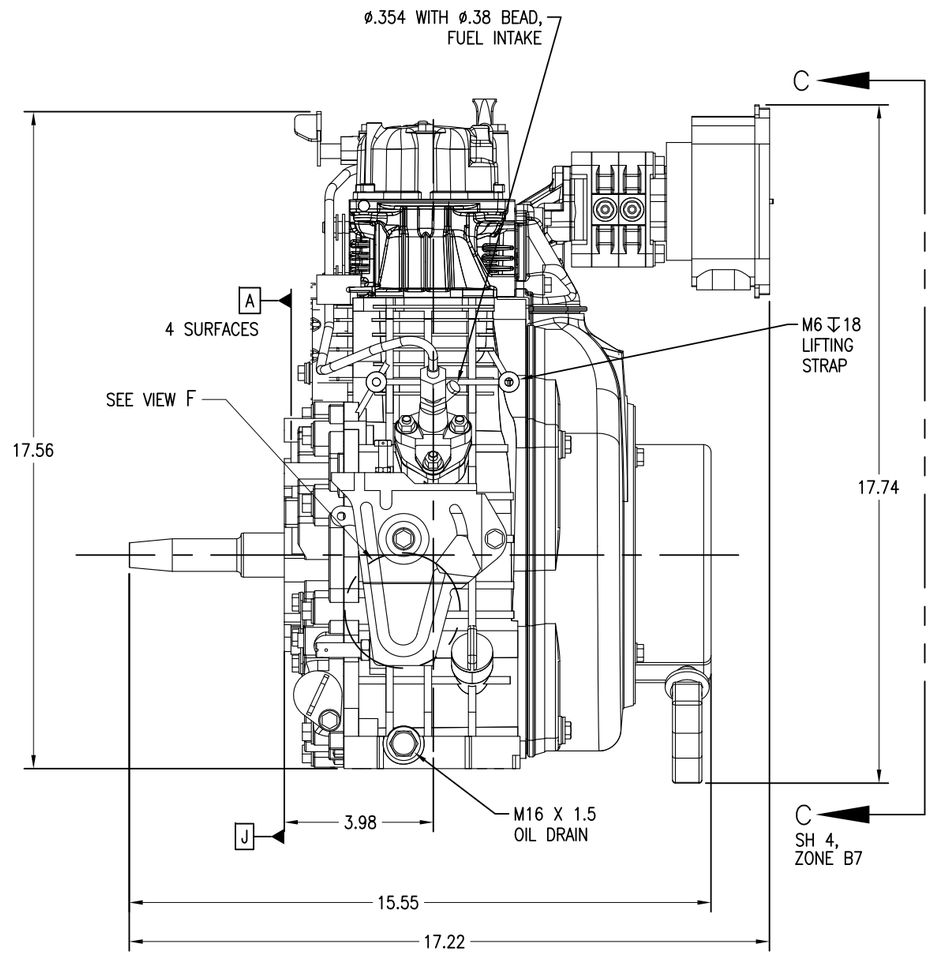

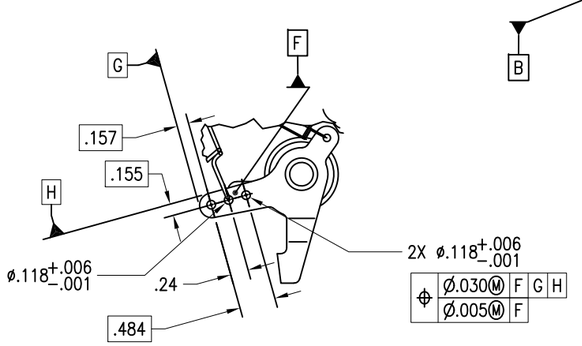

VIEW F
SCALE: 1/1
DETAILS OMITTED FOR CLARITY

SOURCE CONTROL DRAWING

THIS IS AN AutoCAD® DRAWING. DO NOT MANUALLY UPDATE

DISTRIBUTION STATEMENT A.
APPROVED FOR PUBLIC RELEASE;
DISTRIBUTION IS UNLIMITED.

DOD PROJECT MANAGER, EXPEDITIONARY ENERGY & SUSTAINMENT SYSTEMS WASHINGTON, D.C.			
SIZE	CAGE CODE	DRAWING NO.	
D	30554	98–19521	
SCALE 1/2	REV LETTER B	SHEET 3	

MEH 12/9/2024 10:21 AM

CAD MAINTAINED. CHANGES SHALL BE INCORPORATED BY THE DESIGN ACTIVITY.

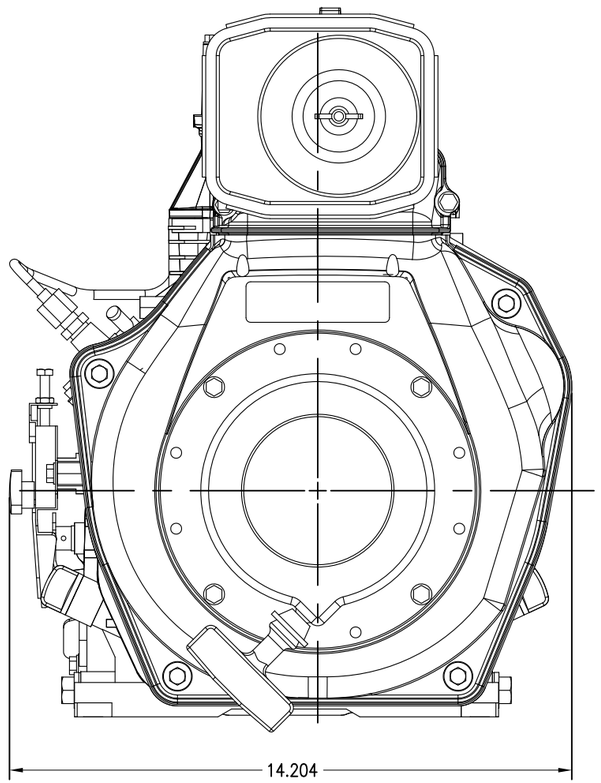

VIEW C–C
SH 3, ZONE B1

D

D SH 5, ZONE A4

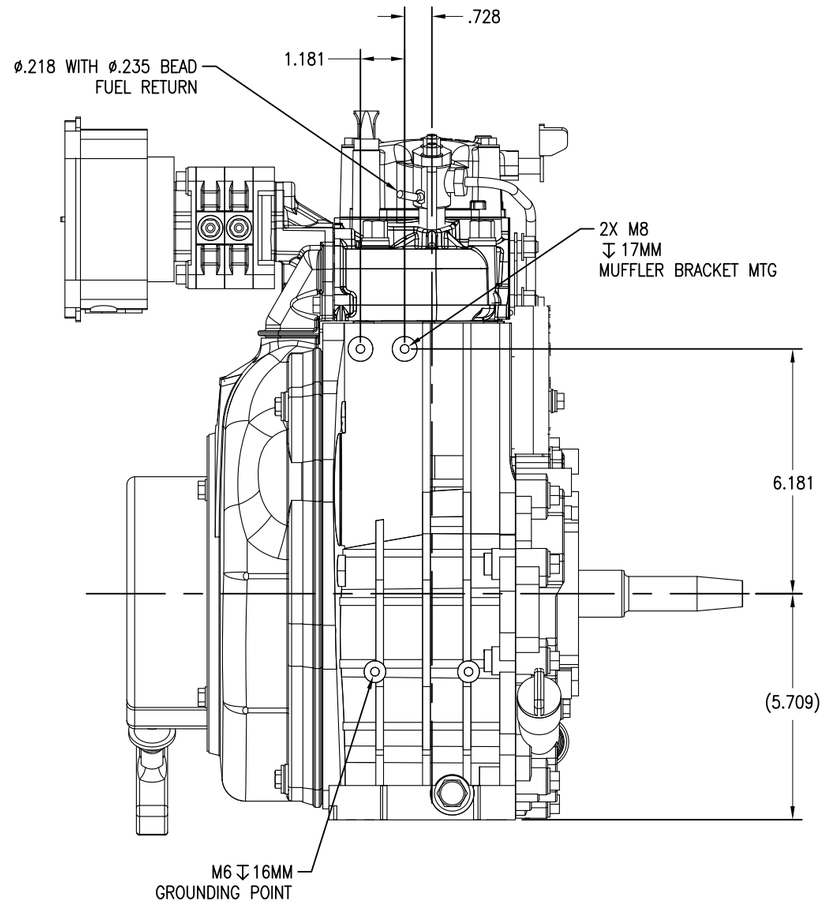

SOURCE CONTROL DRAWING

DISTRIBUTION STATEMENT A.
APPROVED FOR PUBLIC RELEASE;
DISTRIBUTION IS UNLIMITED.

THIS IS AN AutoCAD® DRAWING. DO NOT MANUALLY UPDATE

DOD PROJECT MANAGER, EXPEDITIONARY ENERGY & SUSTAINMENT SYSTEMS WASHINGTON, D.C.		
SIZE D	CAGE CODE 30554	DRAWING NO. 98–19521
SCALE 1/2	REV LETTER B	SHEET 4

MEH 12/9/2024 10:21 AM

CAD MAINTAINED. CHANGES SHALL BE INCORPORATED BY THE DESIGN ACTIVITY.

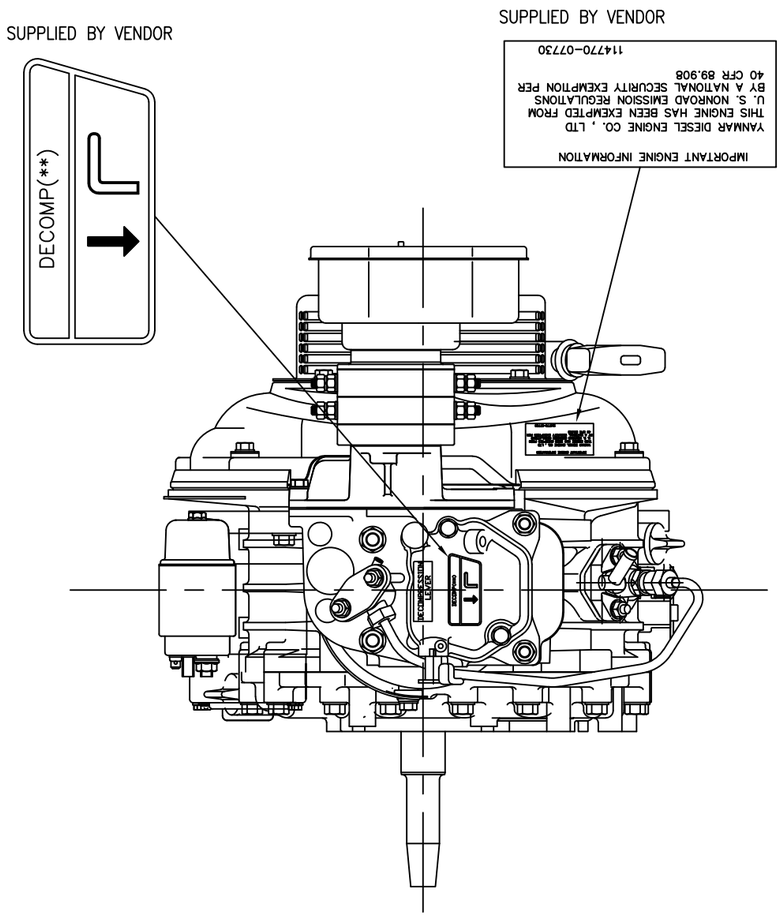

VIEW B–B
SH 3, ZONE C4

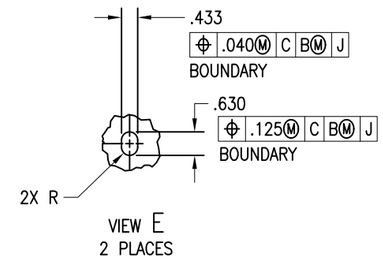

VIEW E
2 PLACES

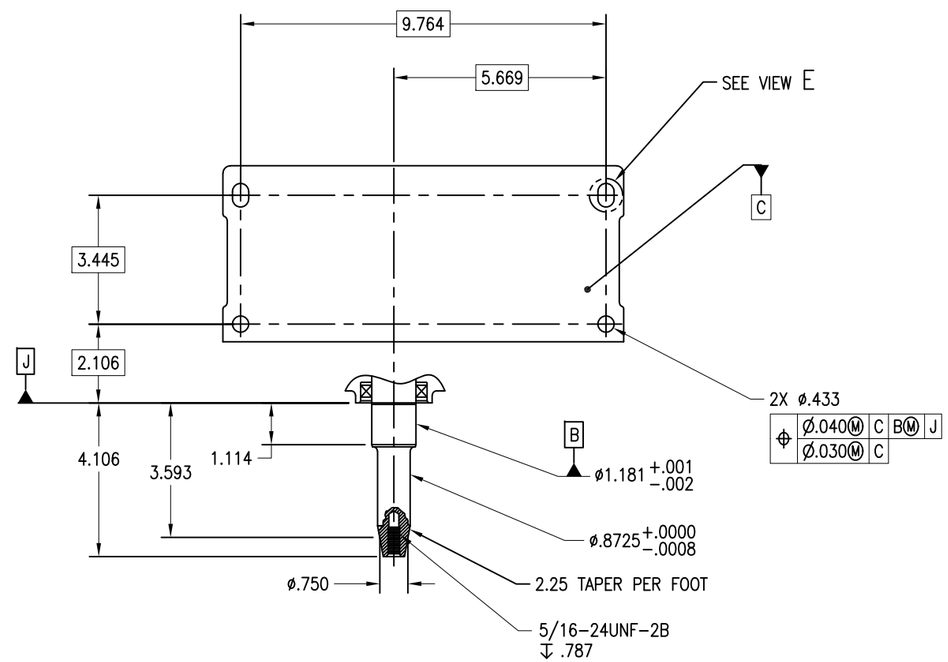

VIEW D–D
SH 4, ZONE B6
ENGINE MTG ARRANGEMENT AND SHAFT DETAIL:
(SOME DETAILS OMITTED FOR CLARITY)

SOURCE CONTROL DRAWING

DISTRIBUTION STATEMENT A.
APPROVED FOR PUBLIC RELEASE;
DISTRIBUTION IS UNLIMITED.

THIS IS AN AutoCAD® DRAWING. DO NOT MANUALLY UPDATE

DOD PROJECT MANAGER, EXPEDITIONARY ENERGY & SUSTAINMENT SYSTEMS WASHINGTON, D.C.			
SIZE	CAGE CODE	DRAWING NO.	
D	30554	98–19521	
SCALE 1/2	REV LETTER B	SHEET 5	

MEH 12/9/2024 10:21 AM