DW 98-19524 30554 001 F 002 01 01 U DA T N D 5

REV SH 2	ZONE	LTR	REVISIONS DESCRIPTION	DATE	APPROVED
E		E	SERVICE SIGN OFF	00-08-09	MTP
E		F	SEE ECP 01CE610300	02-05-13	DEP
E		G	SEE ECP NO. 09HE002100	08-11-25	WHM

CAD MAINTAINED. CHANGES SHALL BE INCORPORATED BY THE DESIGN ACTIVITY.

CONNECTOR	DESCRIPTION
J4/P4	A2 (MALFUNCTION GROUP)
J5/P5	HT (SWITCH, ENG HIGH TEMP)
J6/P6	A9 (REG, BATTERY CHARGING)
J7/P7	CONTROL BOX CONNECTOR
J8/P8	FL2A/FL2B (FLOAT SWITCH)
J9/P9	E1 (PUMP)
J10/P10	A6 (GOVERNOR ACTUATOR)
J11/P11	FL1 (FLOAT SWITCH)
J12/P12	E2 (PUMP)
J13/P13	B2 (FAN)
J14/P14	B3 (FAN)

CONNECTOR	DESCRIPTION
J15/P15, J16/P16, J17/P17	A8 (POWER CONVERTER)

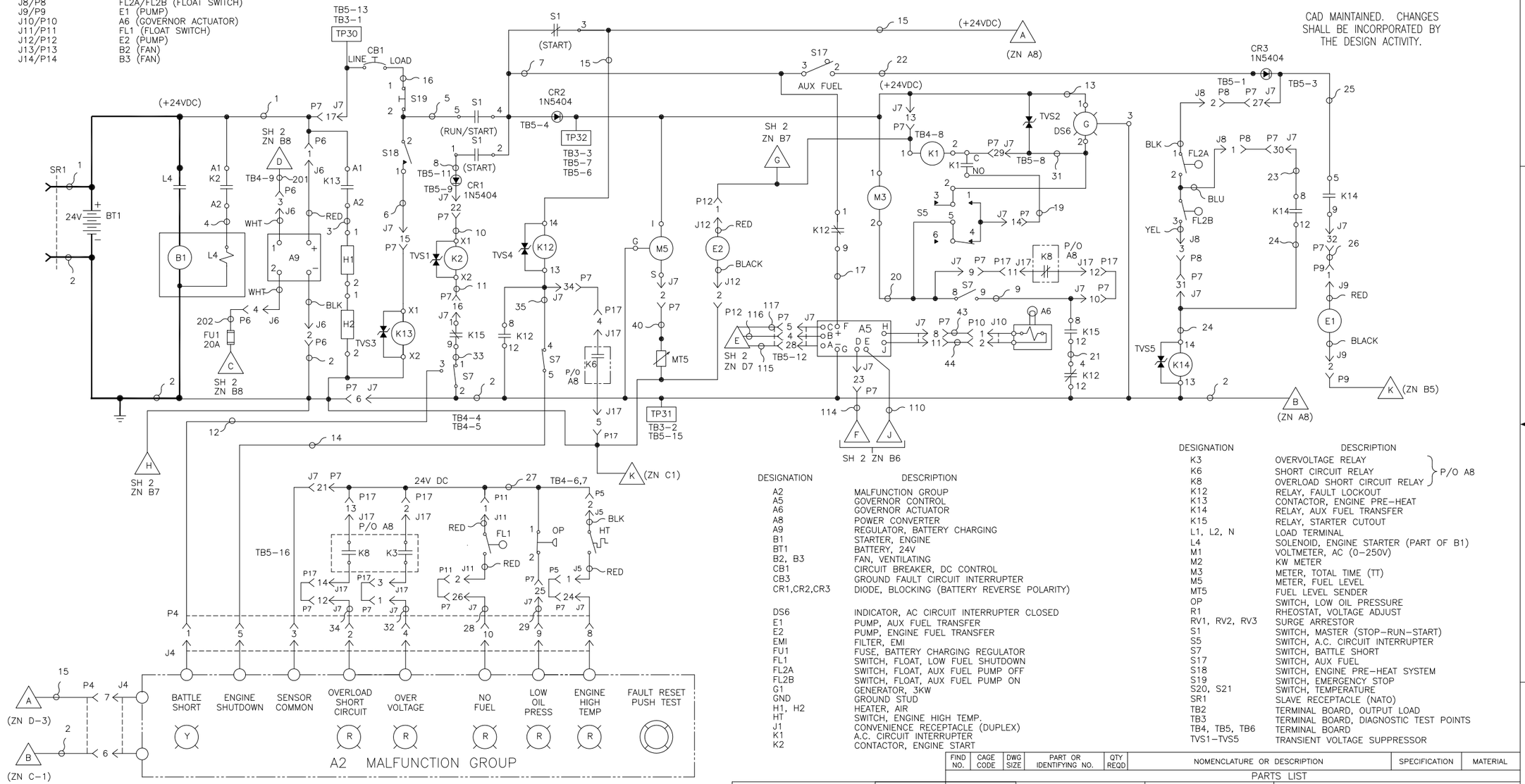

DESIGNATION	DESCRIPTION
A2	MALFUNCTION GROUP
A5	GOVERNOR CONTROL
A6	GOVERNOR ACTUATOR
A8	POWER CONVERTER
A9	REGULATOR, BATTERY CHARGING
B1	STARTER, ENGINE
BT1	BATTERY, 24V
B2, B3	FAN, VENTILATING
CB1	CIRCUIT BREAKER, DC CONTROL
CB3	GROUND FAULT CIRCUIT INTERRUPTER
CR1,CR2,CR3	DIODE, BLOCKING (BATTERY REVERSE POLARITY)
DS6	INDICATOR, AC CIRCUIT INTERRUPTER CLOSED
E1	PUMP, AUX FUEL TRANSFER
E2	PUMP, ENGINE FUEL TRANSFER
EMI	FILTER, EMI
FU1	FUSE, BATTERY CHARGING REGULATOR
FL1	SWITCH, FLOAT, LOW FUEL SHUTDOWN
FL2A	SWITCH, FLOAT, AUX FUEL PUMP OFF
FL2B	SWITCH, FLOAT, AUX FUEL PUMP ON
G1	GENERATOR, 3KW
GND	GROUND STUD
H1, H2	HEATER, AIR
HT	SWITCH, ENGINE HIGH TEMP.
J1	CONVENIENCE RECEPTACLE (DUPLEX)
K1	A.C. CIRCUIT INTERRUPTER
K2	CONTACTOR, ENGINE START

DESIGNATION	DESCRIPTION	
K3	OVERVOLTAGE RELAY	P/O A8
K6	SHORT CIRCUIT RELAY	P/O A8
K8	OVERLOAD SHORT CIRCUIT RELAY	P/O A8
K12	RELAY, FAULT LOCKOUT	
K13	CONTACTOR, ENGINE PRE-HEAT	
K14	RELAY, AUX FUEL TRANSFER	
K15	RELAY, STARTER CUTOUT	
L1, L2, N	LOAD TERMINAL	
L4	SOLENOID, ENGINE STARTER (PART OF B1)	
M1	VOLTMETER, AC (0-250V)	
M2	KW METER	
M3	METER, TOTAL TIME (TT)	
M5	METER, FUEL LEVEL	
MT5	FUEL LEVEL SENDER	
OP	SWITCH, LOW OIL PRESSURE	
R1	RHEOSTAT, VOLTAGE ADJUST	
RV1, RV2, RV3	SURGE ARRESTOR	
S1	SWITCH, MASTER (STOP-RUN-START)	
S5	SWITCH, A.C. CIRCUIT INTERRUPTER	
S7	SWITCH, BATTLE SHORT	
S17	SWITCH, AUX FUEL	
S18	SWITCH, ENGINE PRE-HEAT SYSTEM	
S19	SWITCH, EMERGENCY STOP	
S20, S21	SWITCH, TEMPERATURE	
SR1	SLAVE RECEPTACLE (NATO)	
TB2	TERMINAL BOARD, OUTPUT LOAD	
TB3	TERMINAL BOARD, DIAGNOSTIC TEST POINTS	
TB4, TB5, TB6	TERMINAL BOARD	
TVS1-TVS5	TRANSIENT VOLTAGE SUPPRESSOR	

NOTES:

1. INTERPRET DRAWING PER MIL-STD-100.
2. D.C. VOLTAGES SHOWN AT NOMINAL VALUES, VOLTAGES MAY VARY BETWEEN 20-32VDC UNLESS OTHERWISE SPECIFIED.
3. FOR WIRING DIAGRAM SEE DWG. 98-19525.
4. A.C. VOLTAGES SHOWN AT NOMINAL VALUES. VOLTAGE MAY VARY ±10%.

DISTRIBUTION STATEMENT A.
APPROVED FOR PUBLIC RELEASE;
DISTRIBUTION IS UNLIMITED.

FIND NO.	CAGE CODE	DWG SIZE	PART OR IDENTIFYING NO.	QTY REQD	NOMENCLATURE OR DESCRIPTION	SPECIFICATION	MATERIAL

PARTS LIST

DOD RELEASE	DESIGN	PRODUCTION
AIR FORCE		
ARMY		M. PAYNE
NAVY		
MARINE CORPS		

DRAWING REPOSITORY
U.S. ARMY COMMUNICATION-ELECTRONICS COMMAND
ATTN: AMSEL-LC-ED-BD
FT. BELVOIR, VA. 22060-5849

NEXT ASSY	USED ON
98-19503	98-831

APPLICATION

UNLESS OTHERWISE SPECIFIED DIMENSIONS ARE IN INCHES
TOLERANCES ANGLES ±1°
3 PLACE DECIMALS ± .015
2 PLACE DECIMALS ± .03
FRACTIONS ±

MATERIAL

CONTRACT NO. DAAK01-96-C-0085
DATE 98-03-06

PREPARED	FPM	98-06-15
CHECKED	MAF	98-08-28
ENGINEER	MAF	98-08-28

DEPT OF DEFENSE PROJECT MANAGER MOBILE ELECTRIC POWER
DONALD E. PETERSON

DOD PROJECT MANAGER-MOBILE ELECTRIC POWER
WASHINGTON, D.C.

SCHEMATIC DIAGRAM, AC/DC, 3KW, 60 HZ, GENERATOR SET

SIZE	CAGE CODE	DRAWING NO.
D	30554	98-19524

SCALE NONE REV LETTER G SHEET 1 OF 2

KRH 1/15/2009 1:26 PM

DW
98-19524
30554
002
E
002
01
01
U
DA
T
N
D
5

REVISIONS				
ZONE	LTR	DESCRIPTION	DATE	APPROVED
	E	SERVICE SIGN OFF	00-08-09	MTP

CAD MAINTAINED. CHANGES SHALL BE INCORPORATED BY THE DESIGN ACTIVITY.

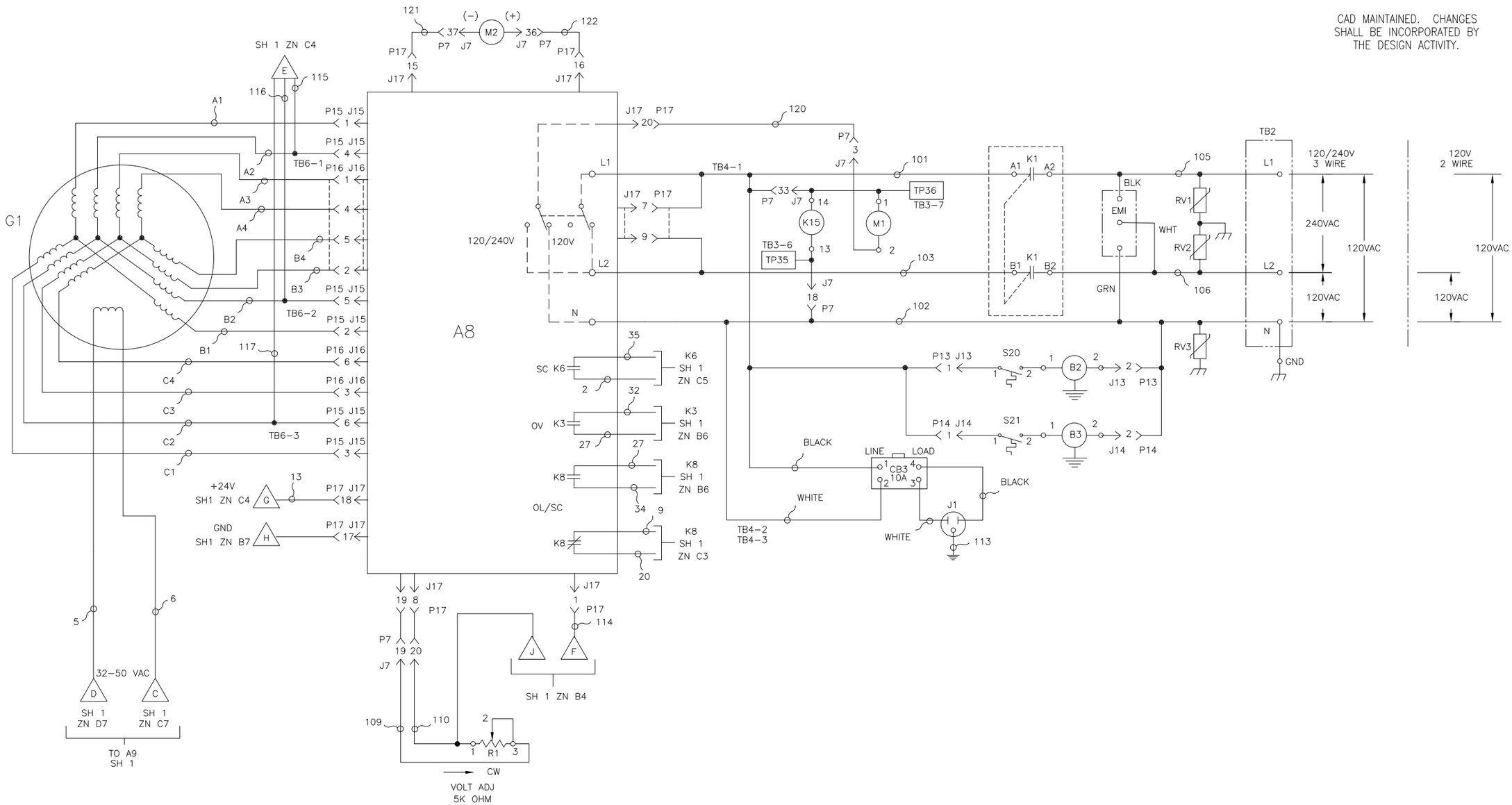

DISTRIBUTION STATEMENT A.
APPROVED FOR PUBLIC RELEASE;
DISTRIBUTION IS UNLIMITED.

FIND NO.	CAGE CODE	DWG SIZE	PART OR IDENTIFYING NO.	QTY REQD	NOMENCLATURE OR DESCRIPTION	SPECIFICATION	MATERIAL

PARTS LIST

DOD RELEASE	DESIGN	PRODUCTION
AIR FORCE		
ARMY		M. PAYNE
NAVY		
MARINE CORPS		

DRAWING REPOSITORY
U.S. ARMY COMMUNICATION-ELECTRONICS COMMAND
ATTN: AMSEL-LC-ED-BD
FT. BELVOIR, VA. 22060-5849

NEXT ASSY | USED ON
APPLICATION

UNLESS OTHERWISE SPECIFIED DIMENSIONS ARE IN INCHES
TOLERANCES ANGLES ±1°
3 PLACE DECIMALS ± .015
2 PLACE DECIMALS ± .03
FRACTIONS ±

MATERIAL

CONTRACT NO. DAAK01-96-C-0085
DATE 98-03-06

PREPARED	FPM	98-06-15
CHECKED	MAF	98-08-28
ENGINEER	MAF	98-08-28

DEPT OF DEFENSE PROJECT MANAGER MOBILE ELECTRIC POWER
DONALD E. PETERSON

DOD PROJECT MANAGER-MOBILE ELECTRIC POWER
WASHINGTON, D.C.

SCHEMATIC DIAGRAM, AC/DC, 3KW, 60 HZ, GENERATOR SET

SIZE	CAGE CODE	DRAWING NO.
D	30554	98-19524

SCALE NONE | REV LETTER E | SHEET 2 OF