SPECIAL PACKAGING INSTRUCTION

CODE ID	SPI NO (TPO)
98748	F 00-273-8669
	SHEET 1 OF 3

PART OR DRAWING NO.	NATIONAL STOCK NO.	CURR REV	
189320-3-1	1660-00-273-8669	E	ILL P. BROWNING
ITEM NOMENCLATURE		ORIG DATE	PS C. QUICK
HEAT, EXCHANGER		76208	CHK T.C. JONES
			AUTH C. DEATON

PRESERVATION IAW MIL-STD-2073

SERVICEABLE METHOD: 10
UNSERVICEABLE METHOD: 10

QUP 001

ICQ N/A

CLEANING & DRYING IAW MIL-STD-2073

PRESERVATIVE N/A

MARKING IAW MIL-STD-129

SPECIAL MARKINGS:

A) SPI NO. F 00-273-8669
B) REUSABLE CONTAINER AND DUNNAGE DO NOT DESTROY.
C) NOT FOR OUTSIDE STORAGE.

CLOSURE

LEVEL A: N/A
LEVEL B: ASTM-D-1974

PACKING AS SPECIFIED BELOW AND BILL OF MATERIALS

LEVEL	SPEC	STYLE	TYPE	CL	VRTY	GR	TR
A	N/A	N/A	N/A	N/A	N/A	N/A	N/A
B	ASTM-D-5118	RSC	CF	WR	SW	V3C	N/A

	LEVEL A	LEVEL B
GROSS CU FT	N/A	3.353
GROSS WT LBS	N/A	34.3
DESIGN FRAGILITY G	N/A	N/A

CNTNR I.D.	LENGTH	WIDTH	DEPTH
LEVEL A:	N/A	N/A	N/A
LEVEL B:	21 1/2	20	12 1/4

CNTNR O.D.	LENGTH	WIDTH	DEPTH
LEVEL A:	N/A	N/A	N/A
LEVEL B:	21 7/8	20 3/8	13

ITEM DIM	17 7/8	15 5/8	8 1/4
ITEM WT LBS	29.55 LBS.		

REVISIONS		DATE
LTR	DESCRIPTION	
A	REDRAWN	76208
B	REDRAWN	85128
C	REDRAWN	94031
D	UPDATE SPECIFICATIONS	06284
E	REVISED AND REDRAWN	10319

PART NO.	QTY.	NOMENCLATURE OR DESCRIPTION	SIZE (INCHES UNLESS SPECIFIED) TOLERANCES ON FRAC. ± 1/8, DECIMAL ± .10, ANGLES ± 1°.	MATERIAL SPECIFICATION
4	1	SUPPORT, TOP	21 1/2 X 20 X 4	A-A-59136
3	1	WRAP	43 X 26	MIL-PRF-121
2	1	SUPPORT, BASE	21 1/2 X 20 X 4	A-A-59136
1	1	CONTAINER I.D.	21 1/2 X 20 X 12 1/4	SEE LEVEL OF PACK

SPI NO. F 00-273-8669

SPECIAL PACKAGING INSTRUCTION (CONTINUATION SHEET)	CODE ID 98748	SPI NO (TPO) F00-273-8669
ITEM NOMENCLATURE HEAT EXCHANGER		SHEET 2 OF 3

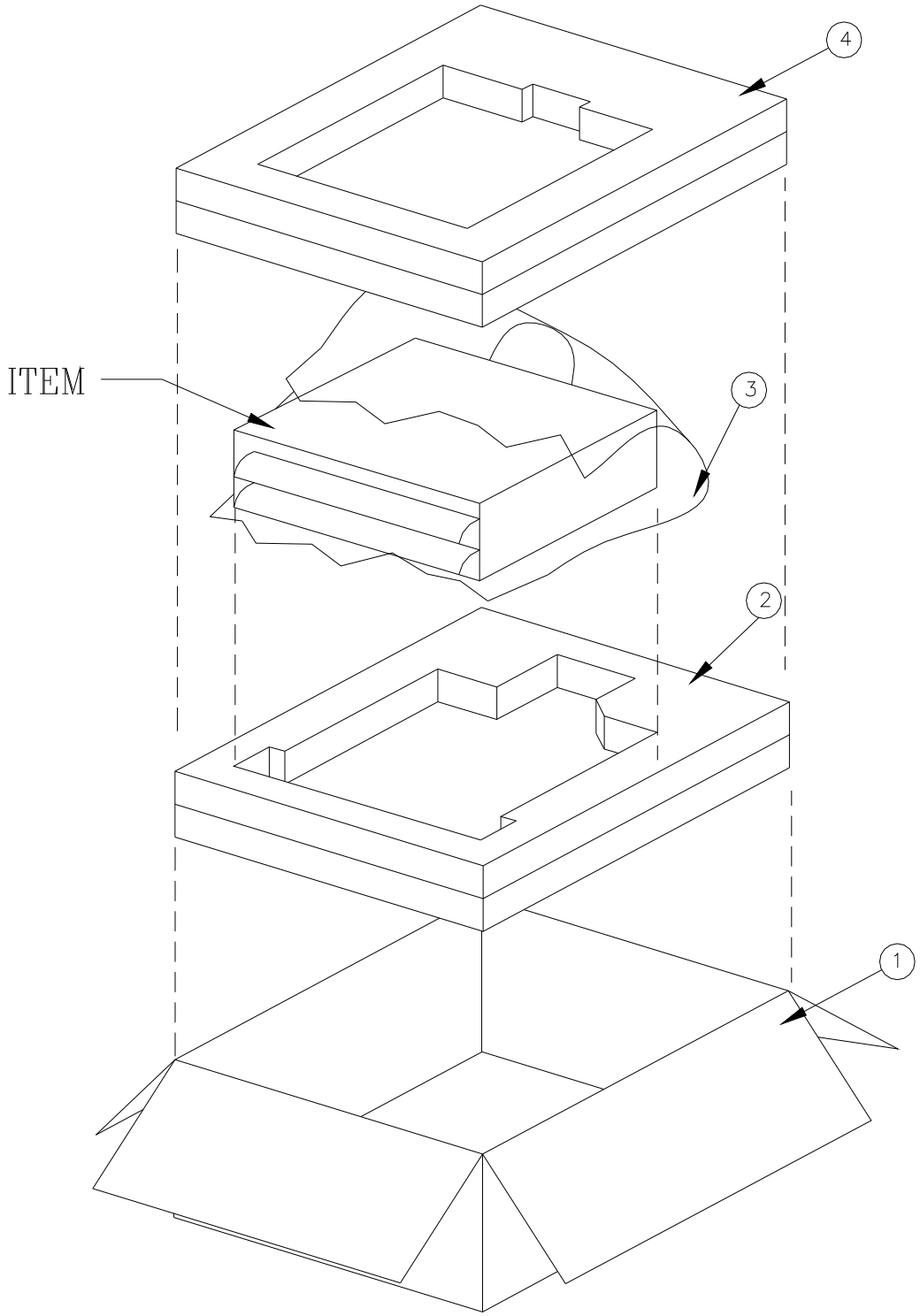

SPECIAL PACKAGING INSTRUCTION (CONTINUATION SHEET)	CODE ID 98748	SPI NO (TPO) F 00-273-8669
ITEM NOMENCLATURE HEAT EXCHANGER		SHEET 3 OF 3

TOP PAD

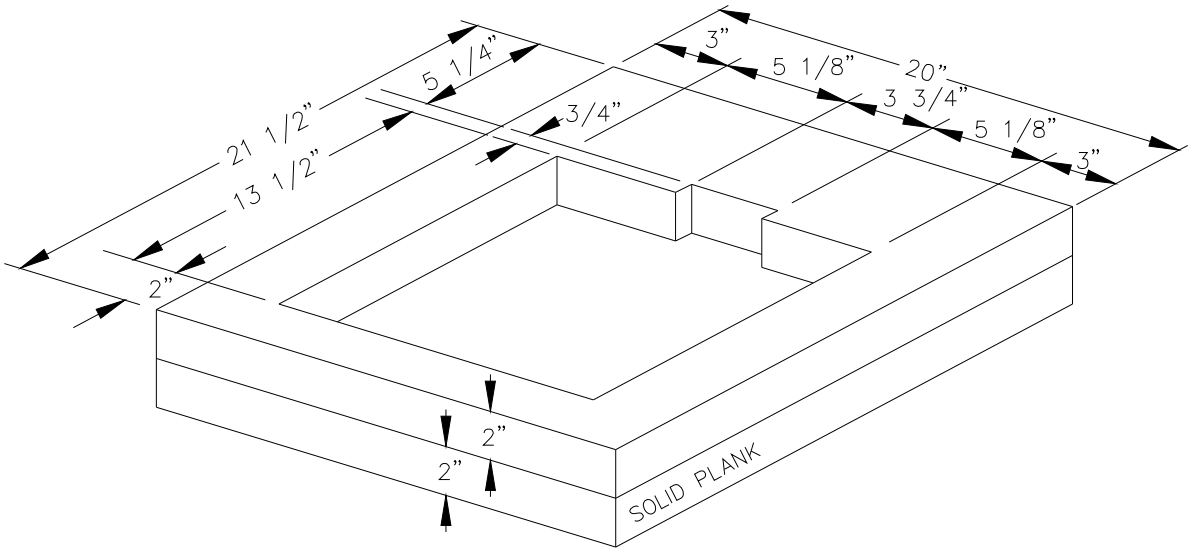

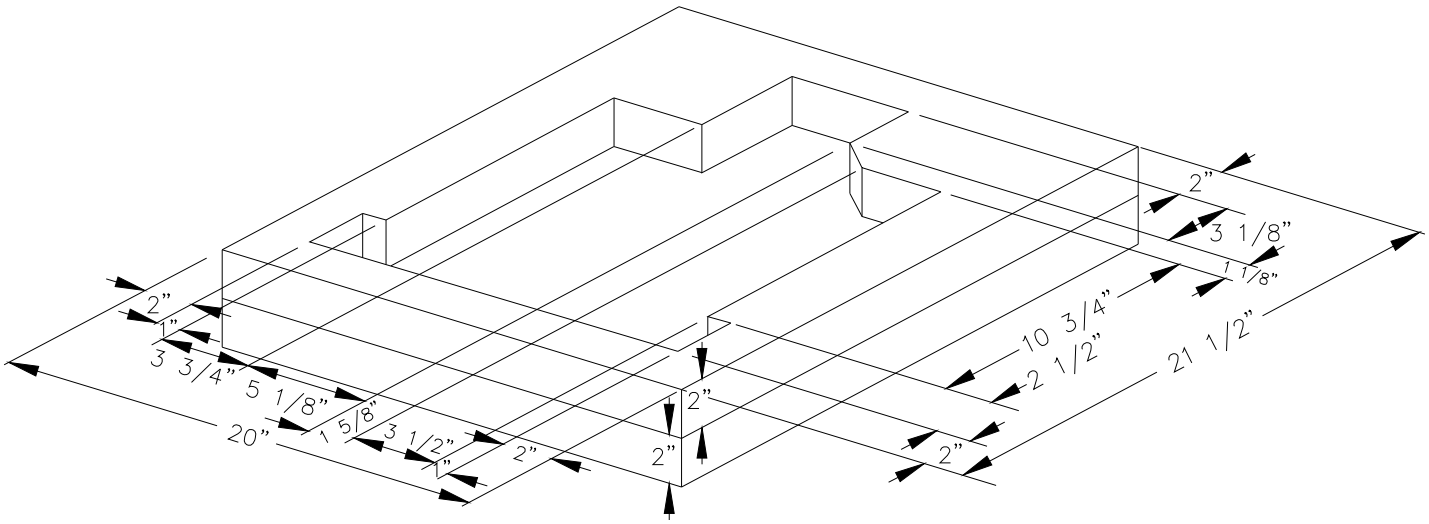

BOTTOM PAD