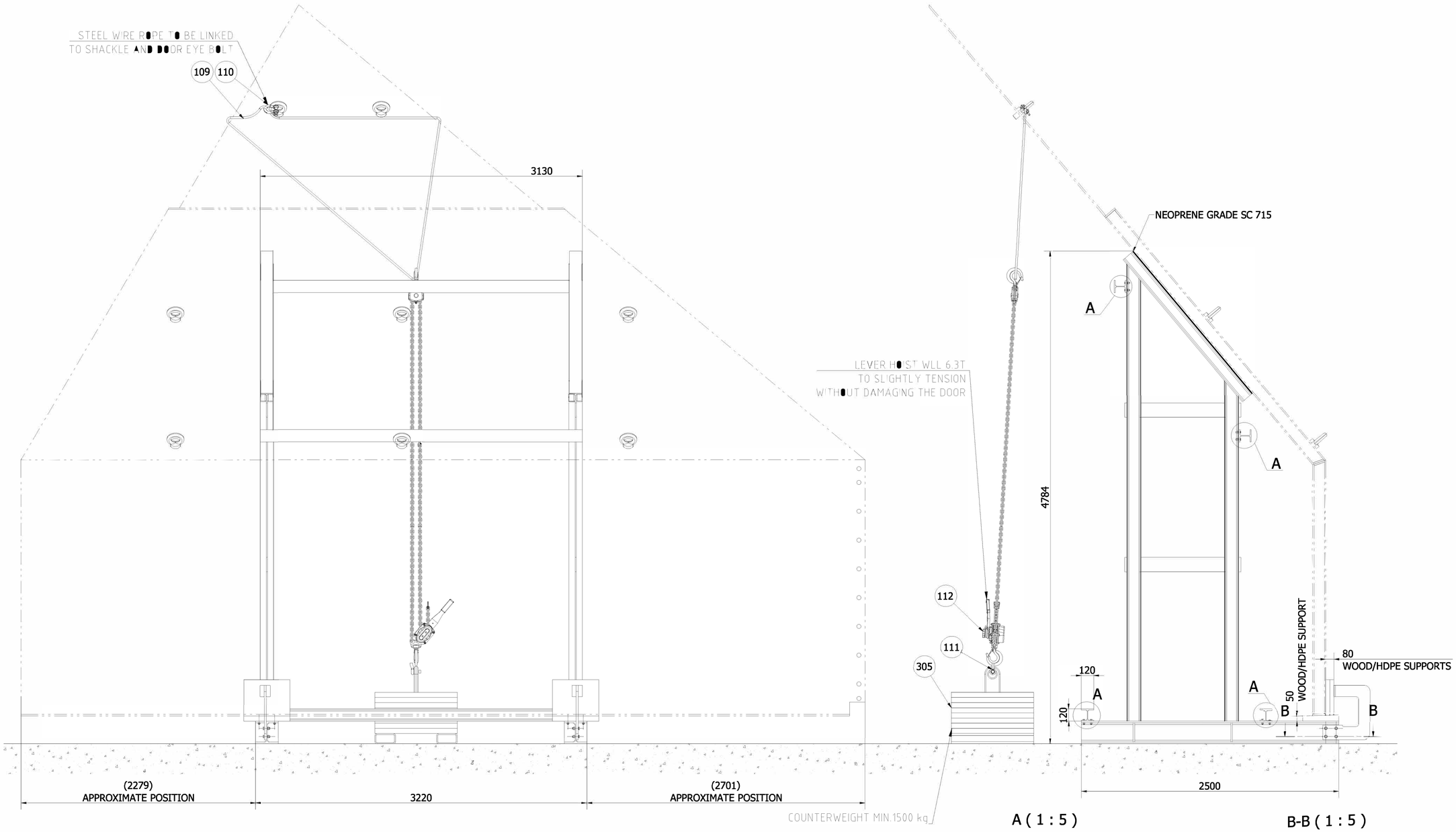

A (1 : 5)

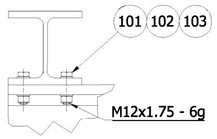

B-B (1 : 5)

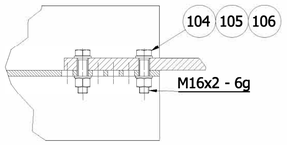

REV.	DESCRIPTION	DATE	DRAWN BY	CHECKED BY	APPROVED BY
00	ISSUED	14 FEB 24	STEFANI A.	DI CHIARA M.	THORNTON R.

kTR INFO

31st CES/CEOER

A/E INFO

AVIANO AIR BASE

AVIANO, ITALY

31st FIGHTER WING
31st CIVIL ENGINEERING SQUADRON
31st CES PROJECT MANAGEMENT ELEMENT

TITLE

1st GEN PAS SUPPORTING STRUCTURE
FOR HINGE REPLACEMENT

NOTES

PROJECT NR:	ASHE 22-1041
OBTAINED FROM:	FIELD
PRJ. MANAGER:	STEFANI A.
PRJ. INSPECTOR:	CACCIA F.
CONTRACT NR.:	FA568222C0018
CONTR. OFFICER:	BREDA V.

CLASSIFICATION:

SIZE: A1 SCALE: 1:20

DRW NUMBER: ASHE- 8010 - M REV. 00

SHEET 001 OF 002

SUBMITTAL: AS-BUILT

FILE NAME: ASHE-8010-M_00.dwg

DIGITAL SIGNATURES

DESIGNER - PROJECTS ASSOCIATE

31st CES - CAD DESIGN

According to law 31st CES/CEOER considers this document to be a company secret and therefore prohibits any person to reproduce it or make it known as whole or in part to other parties or to competitors without specific written authorization of CES's Management

ITEM	Q.TY	ITEM NUMBER	DESCRIPTION
305	1	ASHE-8010-M305	COUNTERWEIGHT
304	2	ASHE-8010-M304	LOCKING PLATE
303	2	ASHE-8010-M303	HEB 120 BEAM EN 10025
302	2	ASHE-8010-M302	HEB 120 BEAM EN 10025
301	2	ASHE-8010-M301	WELDED FRAME
112	1	LEVER HOIST WLL 6.3 T	LEVER HOIST WLL 6.3 TON - CHAIN 28x32 - LENGTH 6 m
111	1	SHACKLE EN 13889 WLL 8.5T	BOW SHACKLE NR. 854 A085425 WLL 8.5 T
110	1	SHACKLE EN 13889 WLL 6.5T	BOW SHACKLE NR. 854 A085422 WLL 6.5 T
109	1	STEEL WIRE ROPE D18 EN 2408	D18 STEEL WIRE ROPE EN 2408
108	4	HDPE LOADING PLATE TH.40	HDPE LOADING PLATE TH.40
107	2	HDPE LOADING PLATE TH.50	HDPE LOADING PLATE TH.50
106	8	ISO 4032 - M16	M16 HEXAGONAL NUT, STYLE 1 - PRODUCT GRADE A & B ISO 4032
105	8	ISO 4017 - M16 x 60	M16 x 60 HEXAGONAL HEAD SCREW ISO 4017
104	16	UNI 8839 - A 16	A16 WASHER UNI 8839
103	32	ISO 4032 - M12	M12 HEXAGONAL NUT, STYLE 1 - PRODUCT GRADE A & B ISO 4032
102	32	ISO 4017 - M12 x 45	M12 x 45 HEXAGONAL HEAD SCREW ISO 4017
101	64	UNI 8839 - A 12	A12 WASHER UNI 8839

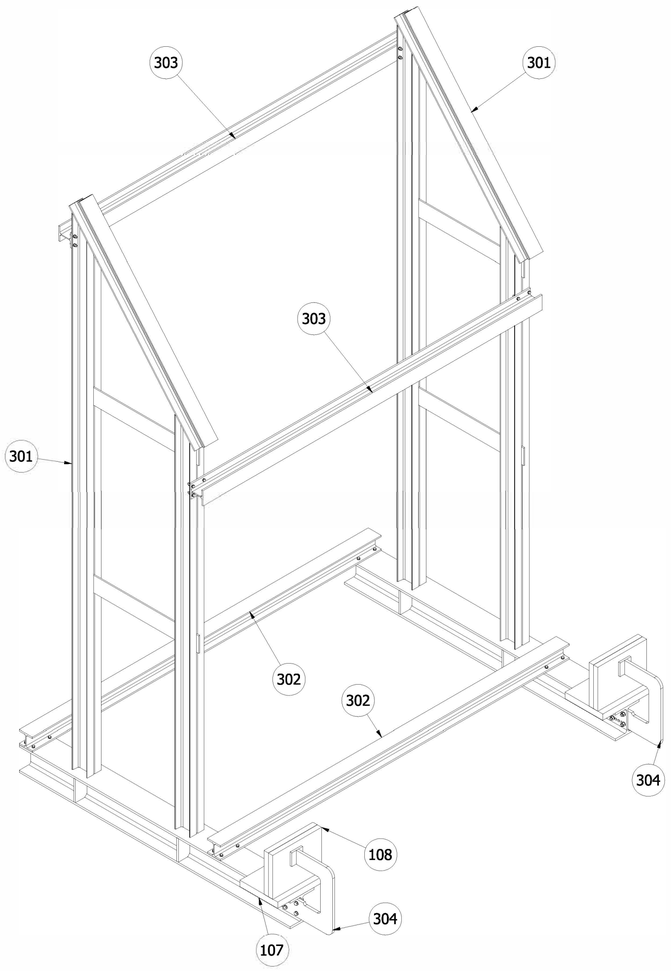

REV.	DESCRIPTION	DATE	DRAWN BY	CHECKED BY	APPROVED BY
00	ISSUED	14 FEB 24	STEFANI A.	DI CHIARA M.	THORNTON R.

RETURN WITH HONOR

LEAD THE WAY
31st CIVIL ENGINEER SQ

KTR INFO

31st CES/CEOER

A/E INFO

AVIANO AIR BASE

AVIANO, ITALY

31st FIGHTER WING
31st CIVIL ENGINEERING SQUADRON
31st CES PROJECT MANAGEMENT ELEMENT
1st GEN PAS SUPPORTING STRUCTURE
FOR HINGE REPLACEMENT

TITLE

NOTES

PROJECT NR:	ASHE 22-1041
OBTAINED FROM:	FIELD
PRJ. MANAGER:	STEFANI A.
PRJ. INSPECTOR:	CACCIA F.
CONTRACT NR.:	FA568222C0018
CONTR. OFFICER:	BREDA V.
CLASSIFICATION:	
SIZE: A1	SCALE: 1:20
DRW NUMBER: ASHE- 8010 - M	REV. 00
SHEET 002 OF 002	
SUBMITTAL	AS-BUILT
FILE NAME	ASHE-8010-M_00.dwg

DIGITAL SIGNATURES

DESIGNER CHECKER ASSOCIATE

31st CES - CAD DESIGN

According to law 31st CES/CEOER considers this document to be a company secret and therefore prohibits any person to reproduce it or make it known in whole or in part to other parties or to competitors without specific written authorization of CES's Management

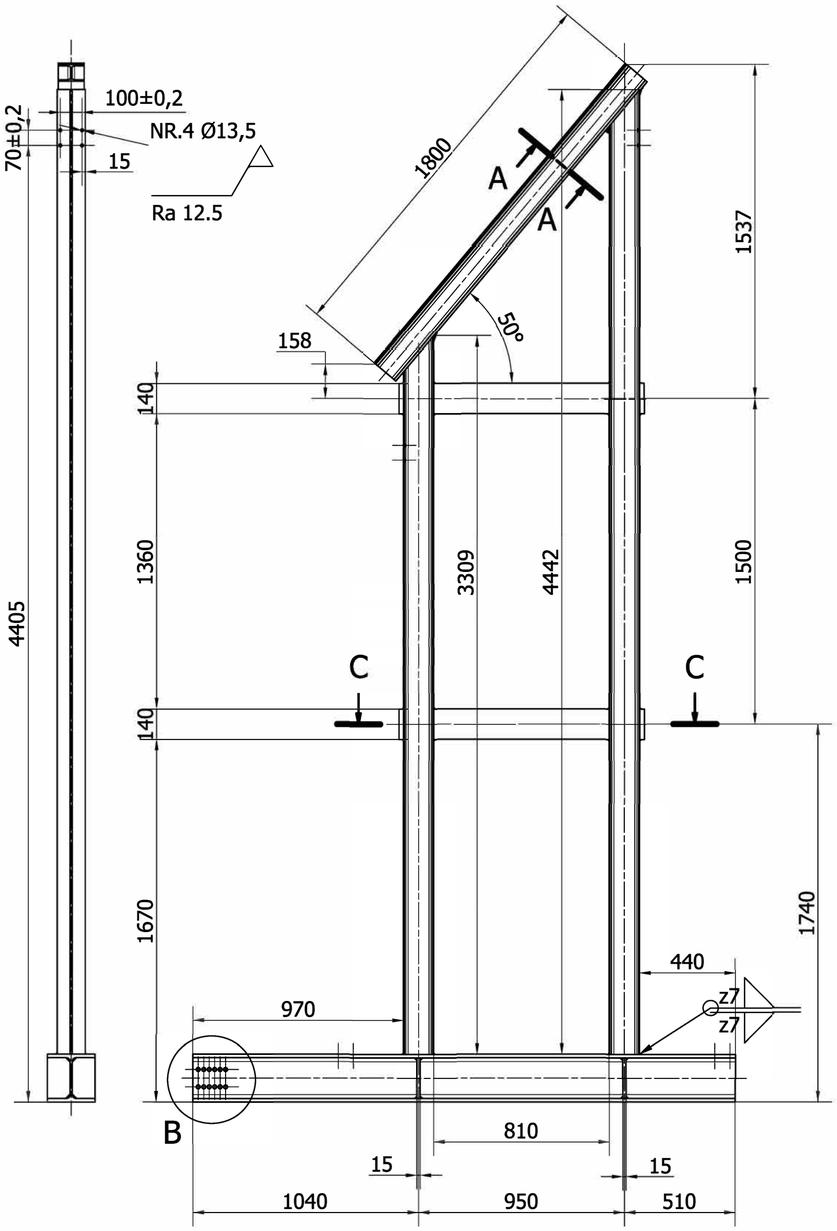

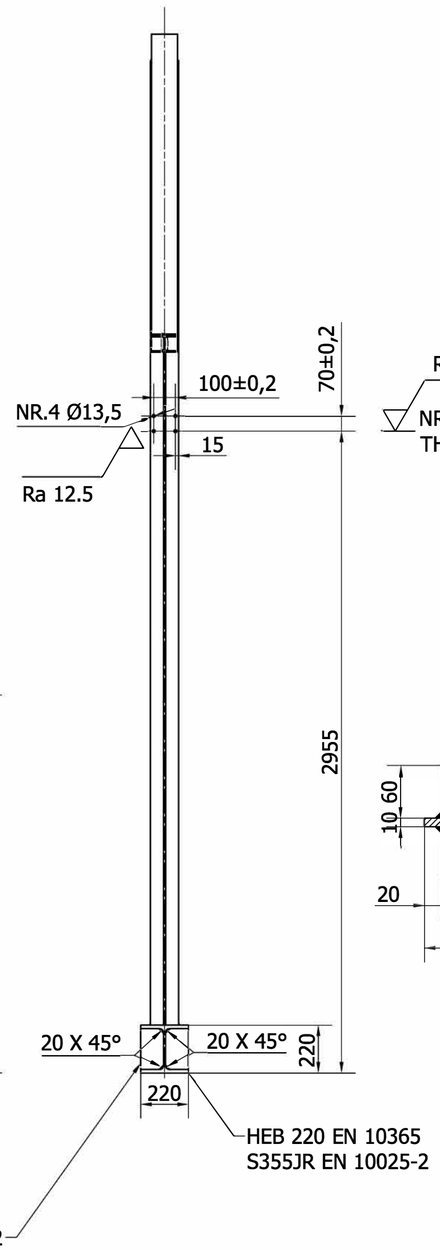

A-A (1:5)

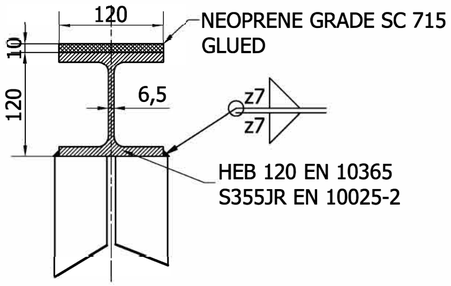

B (1:5)

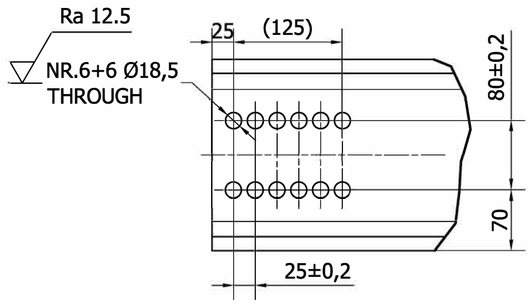

C-C 1:5

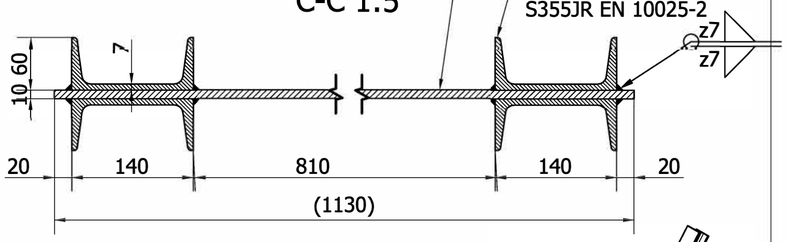

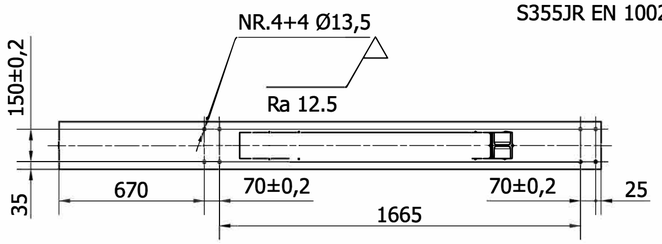

HDG HOT DIP GALVANIZING
POWDER COATING RAL 1003

SALDATURE UNI EN ISO 3834 COMPONENTE CERTIFICATO EN 1090 WELDS AS PER UNI EN ISO 3834 EN 1090 CERTIFIED COMPONENT	
DOVE NON INDICATO A = 0.7 DELLO SPESSORE MINIMO DA COLLEGARE WHERE NOT INDICATED A = 0.7 OF MINIMUM THICKNESS TO BE WELDED	A A/2

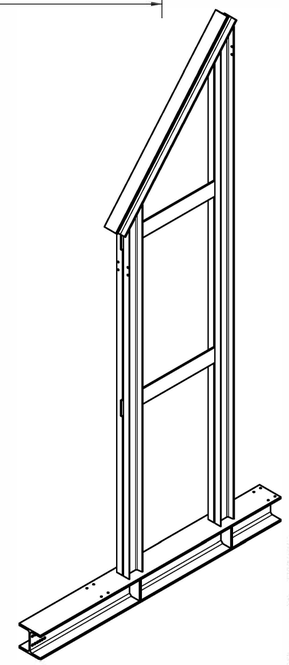

RETURN WITH HONOR

LEAD THE WAY 31st CIVIL ENGINEER SQ

KTR INFO

31st CES/CEOER

A/E INFO

REV.	DESCRIPTION	DATE	DRAWN BY	CHECKED BY	APPROVED BY
00	ISSUED	14 FEB 24	STEFANI A. 31st CES/CEOER	DI CHIARA M. 31st CES/CEINM	THORNTON R. 31st CES/CEOER

AVIANO AIR BASE — AVIANO, ITALY

31st FIGHTER WING
31st CIVIL ENGINEERING SQUADRON
31st CES PROJECT MANAGEMENT ELEMENT

TITLE: WELDED FRAME

NOTES

PROJECT NR:	ASHE 22-1041
OBTAINED FROM:	FIELD
PRJ. MANAGER:	STEFANI A.
PRJ. INSPECTOR:	CACCIA F.
CONTRACT NR.:	FA568222C0018
CONTR. OFFICER:	BREDA V.
CLASSIFICATION:	UNCLASSIFIED
SIZE: A2	SCALE: 1:20
DRW NUMBER	REV.
ASHE- 8010 M301	00
SHEET 001 OF 001	
SUBMITTAL	AS-BUILT
FILE NAME ASHE-8010-M301_00.dwg	

DIGITAL SIGNATURES
APPROVER
CHECKER
DESIGNER

31st CES - CAD DESIGN

According to law 31st CES/CEOER considers this document to be a company secret and therefore prohibits any person to reproduce it or make it known in whole or in part to other parties or to competitors without specific written authorization of CES's Management

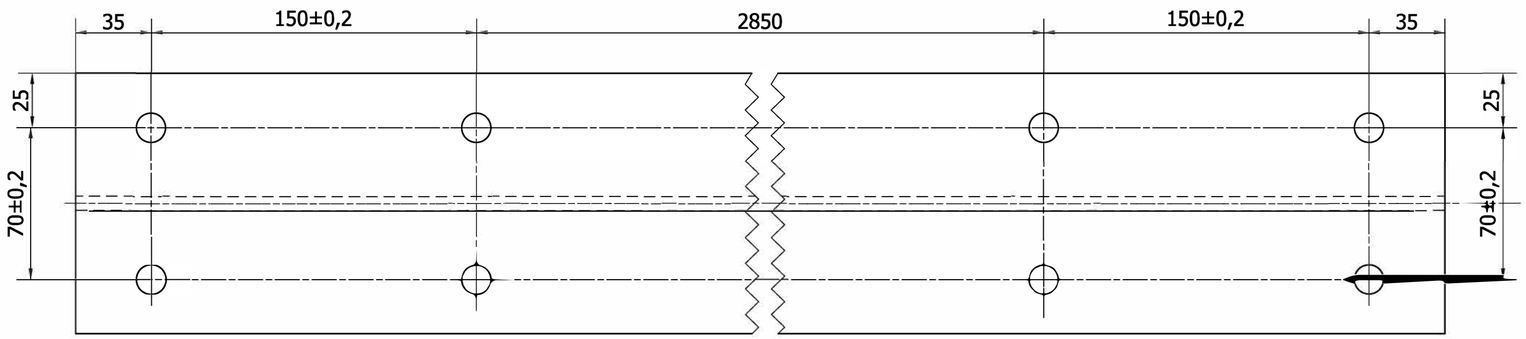

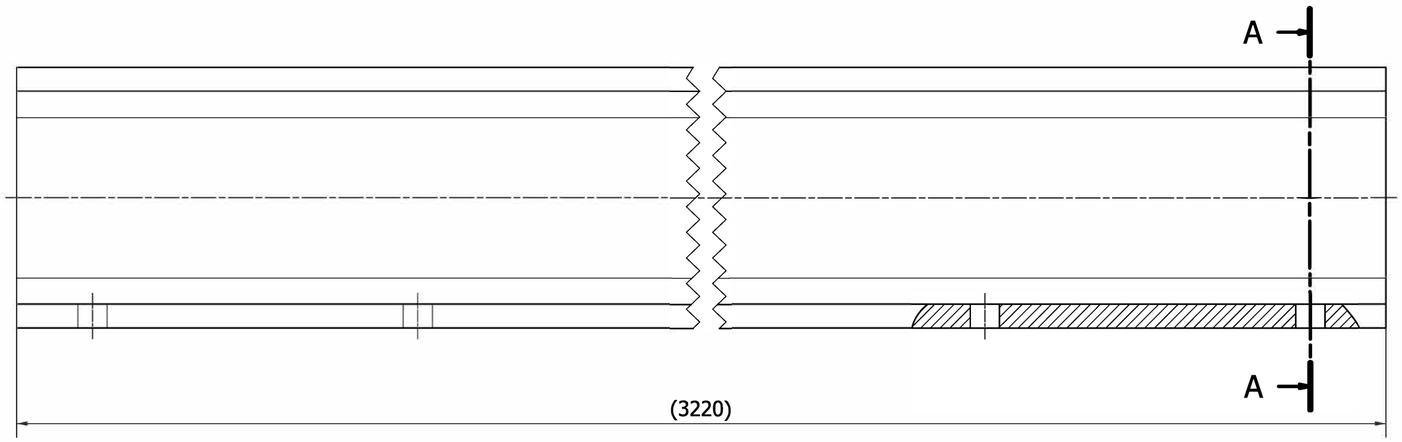

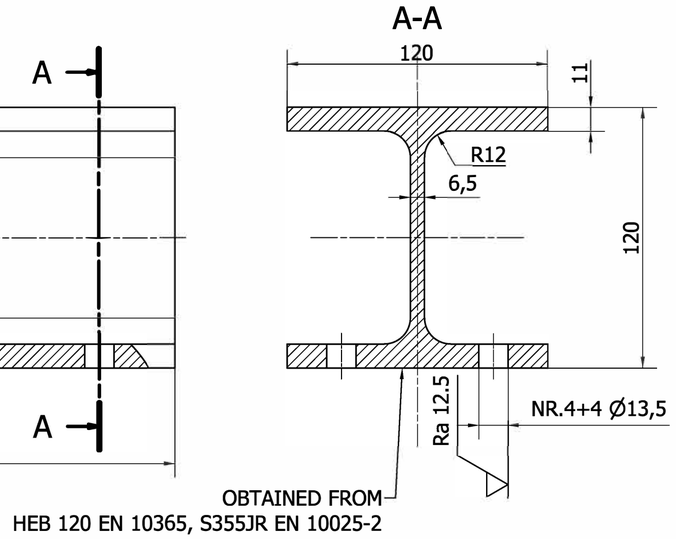

HDG HOT DIP GALVANIZING
POWDER COATING RAL 1003

REV.	DESCRIPTION	DATE	DRAWN BY	CHECKED BY	APPROVED BY
00	ISSUED	14 FEB 24	STEFANI A. 31st CES/CEOER	DI CHIARA M. 31st CES/CEINM	THORNTON R. 31st CES/CEOER

KTR INFO

31st CES/CEOER

A/E INFO

AVIANO AIR BASE — AVIANO, ITALY

31st FIGHTER WING
31st CIVIL ENGINEERING SQUADRON
31st CES PROJECT MANAGEMENT ELEMENT

TITLE: HEB 120 BEAM EN 10025

NOTES

PROJECT NR:	ASHE 22-1041
OBTAINED FROM:	FIELD
PRJ. MANAGER:	STEFANI A.
PRJ. INSPECTOR:	CACCIA F.
CONTRACT NR.:	FA568222C0018
CONTR. OFFICER:	BREDA V.
CLASSIFICATION:	UNCLASSIFIED
SIZE: A2	SCALE: 1:2
DRW NUMBER	REV.
ASHE- 8010 M302	00
SHEET 001 OF 001	
SUBMITTAL	AS-BUILT
FILE NAME ASHE-8010-M302_00.dwg	

DIGITAL SIGNATURES
APPROVER
CHECKER
DESIGNER

31st CES - CAD DESIGN

According to law 31st CES/CEOER considers this document to be a company secret and therefore prohibits any person to reproduce it or make it known in whole or in part to other parties or to competitors without specific written authorization of CES's Management

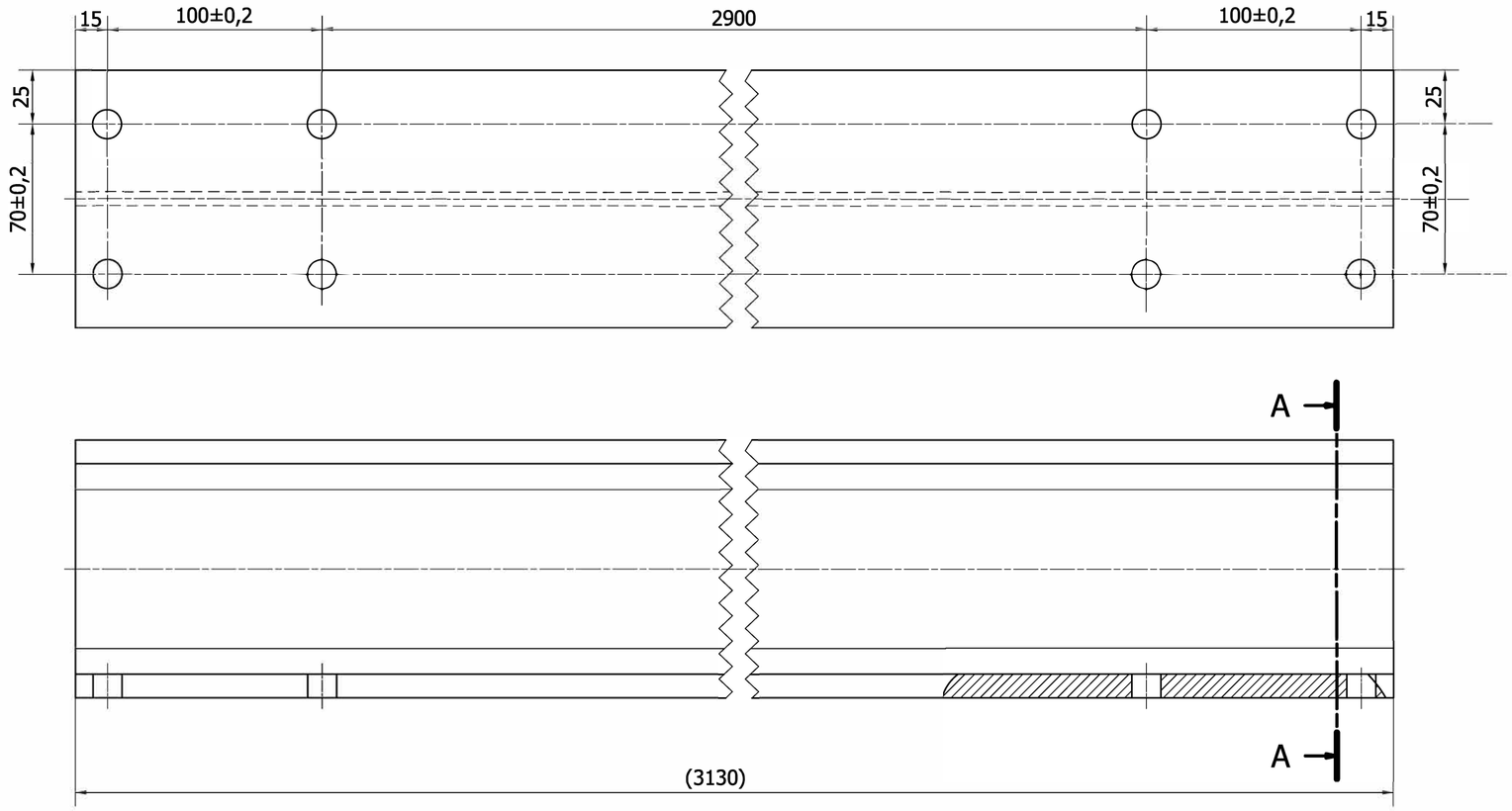

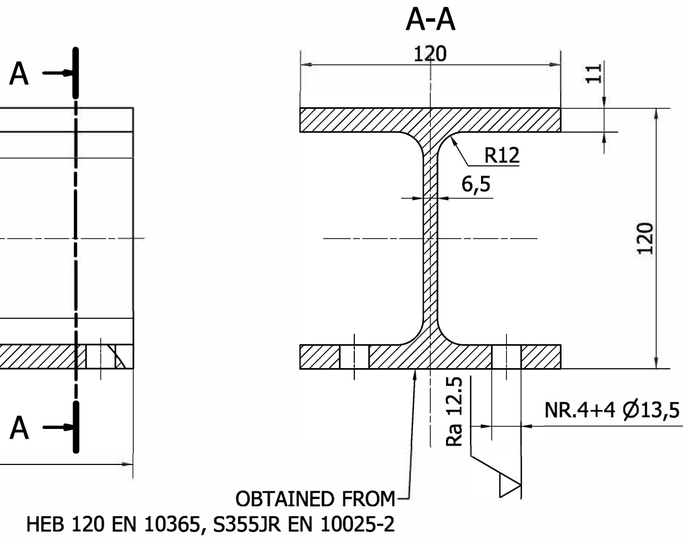

HDG HOT DIP GALVANIZING
POWDER COATING RAL 1003

REV.	DESCRIPTION	DATE	DRAWN BY	CHECKED BY	APPROVED BY
00	ISSUED	14 FEB 24	STEFANI A. 31st CES/CEOER	DI CHIARA M. 31st CES/CEINM	THORNTON R. 31st CES/CEOER

KTR INFO

31st CES/CEOER

A/E INFO

AVIANO AIR BASE — AVIANO, ITALY

31st FIGHTER WING
31st CIVIL ENGINEERING SQUADRON
31st CES PROJECT MANAGEMENT ELEMENT

TITLE: HEB 120 BEAM EN 10025

NOTES

PROJECT NR:	ASHE 22-1041
OBTAINED FROM:	FIELD
PRJ. MANAGER:	STEFANI A.
PRJ. INSPECTOR:	CACCIA F.
CONTRACT NR.:	FA568222C0018
CONTR. OFFICER:	BREDA V.
CLASSIFICATION:	UNCLASSIFIED
SIZE: A2	SCALE: 1:2
DRW NUMBER	REV.
ASHE- 8010 M303	00
SHEET 001 OF 001	
SUBMITTAL	AS-BUILT
FILE NAME	ASHE-8010-M303_00.dwg

DIGITAL SIGNATURES
APPROVER
CHECKER
DESIGNER

31st CES - CAD DESIGN

According to law 31st CES/CEOER considers this document to be a company secret and therefore prohibits any person to reproduce it or make it known in whole or in part to other parties or to competitors without specific written authorization of CES's Management

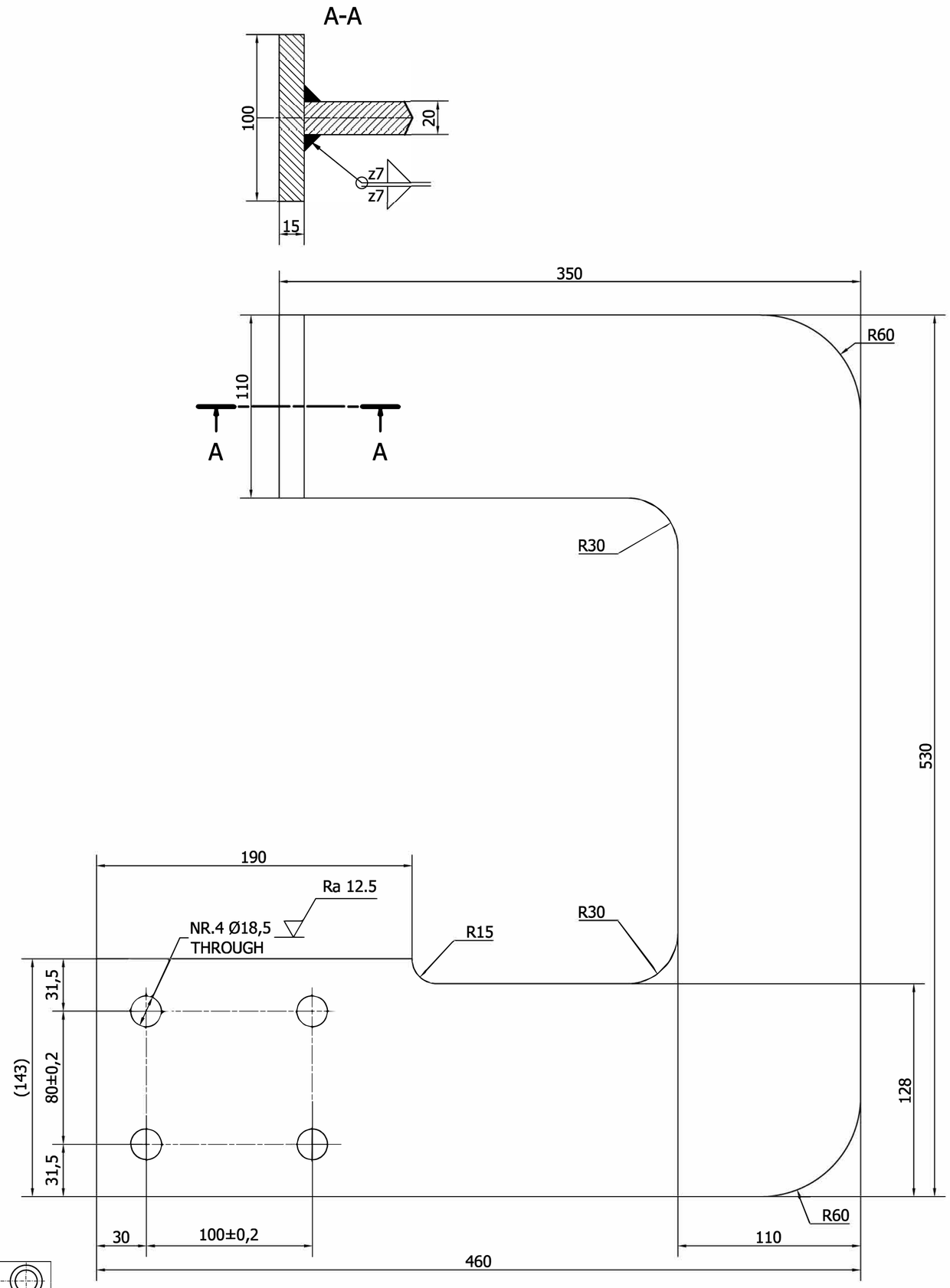

HDG HOT DIP GALVANIZING
POWDER COATING RAL 1003

SALDATURE UNI EN ISO 3834 COMPONENTE CERTIFICATO EN 1090 WELDS AS PER UNI EN ISO 3834 EN 1090 CERTIFIED COMPONENT	
DOVE NON INDICATO A = 0.7 DELLO SPESSORE MINIMO DA COLLEGARE WHERE NOT INDICATED A = 0.7 OF MINIMUM THICKNESS TO BE WELDED	A A/2

31st CES - CAD DESIGN

KTR INFO

31st CES/CEOER

A/E INFO

REV.	DESCRIPTION	DATE	DRAWN BY	CHECKED BY	APPROVED BY
00	ISSUED	14 FEB 24	STEFANI A. 31st CES/CEOER	DI CHIARA M. 31st CES/CEINM	THORNTON R. 31st CES/CEOER

AVIANO AIR BASE

AVIANO, ITALY

31st FIGHTER WING
31st CIVIL ENGINEERING SQUADRON
31st CES PROJECT MANAGEMENT ELEMENT

TITLE: LOCKING PLATE

NOTES

PROJECT NR:	ASHE 22-1041
OBTAINED FROM:	FIELD
PRJ. MANAGER:	STEFANI A.
PRJ. INSPECTOR:	CACCIA F.
CONTRACT NR.:	FA568222C0018
CONTR. OFFICER:	BREDA V.
CLASSIFICATION:	UNCLASSIFIED
SIZE: A2	SCALE: 1:2
DRW NUMBER	REV.
ASHE- 8010 M304	00
SHEET 001 OF 001	
SUBMITTAL	AS-BUILT
FILE NAME ASHE-8010-M304_00.dwg	

DIGITAL SIGNATURES

DESIGNER CHECKER APPROVER

According to law 31st CES/CEOER considers this document to be a company secret and therefore prohibits any person to reproduce it or make it known in whole or in part to other parties or to competitors without specific written authorization of CES's Management

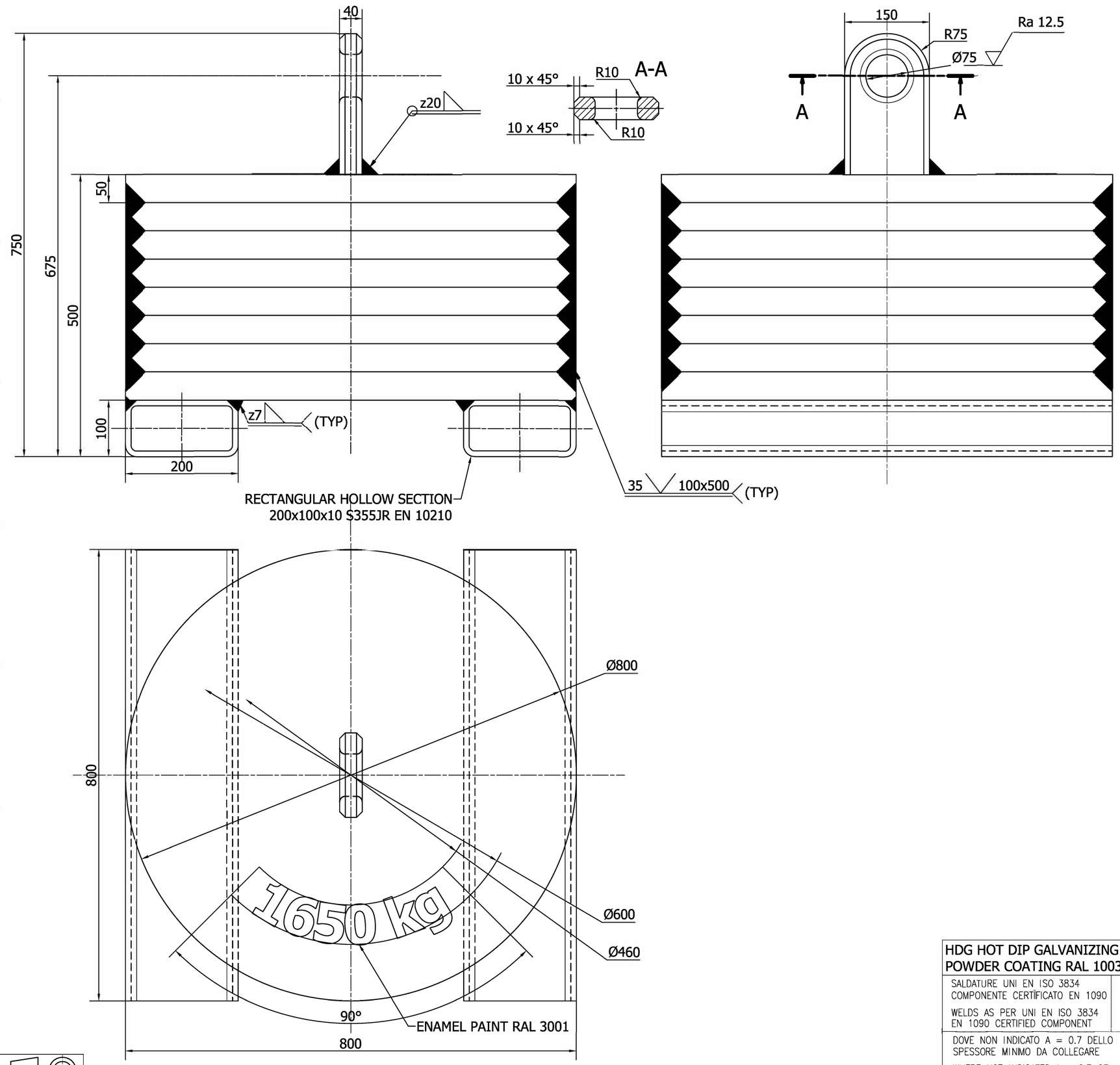

HDG HOT DIP GALVANIZING
POWDER COATING RAL 1003

SALDATURE UNI EN ISO 3834
COMPONENTE CERTIFICATO EN 1090

WELDS AS PER UNI EN ISO 3834
EN 1090 CERTIFIED COMPONENT

DOVE NON INDICATO A = 0.7 DELLO
SPESSORE MINIMO DA COLLEGARE

WHERE NOT INDICATED A = 0.7 OF
MINIMUM THICKNESS TO BE WELDED

31st CES - CAD DESIGN

KTR INFO

31st CES/CEOER

A/E INFO

DIGITAL SIGNATURES

DESIGNER

CHECKER

APPROVER

REV.	DESCRIPTION	DATE	DRAWN BY	CHECKED BY	APPROVED BY
00	ISSUED	14 FEB 24	STEFANI A. 31st CES/CEOER	DI CHIARA M. 31st CES/CEINM	THORNTON R. 31st CES/CEOER

AVIANO AIR BASE — AVIANO, ITALY

31st FIGHTER WING
31st CIVIL ENGINEERING SQUADRON
31st CES PROJECT MANAGEMENT ELEMENT

TITLE: COUNTERWEIGHT

NOTES

PROJECT NR:	ASHE 22-1041
OBTAINED FROM:	FIELD
PRJ. MANAGER:	STEFANI A.
PRJ. INSPECTOR:	CACCIA F.
CONTRACT NR.:	FA568222C0018
CONTR. OFFICER:	BREDA V.
CLASSIFICATION:	UNCLASSIFIED
SIZE: A2	SCALE: 1:5
DRW NUMBER	REV.
ASHE - 8010 - M30 - 00	
SHEET 001 OF 001	
SUBMITTAL	AS-BUILT
FILE NAME ASHE-8010-M305_00.dwg	

According to law 31st CES/CEOER considers this document to be a company secret and therefore prohibits any person to reproduce it or make it known in whole or in part to other parties or to competitors without specific written authorization of CES's Management