## Vicinity Map

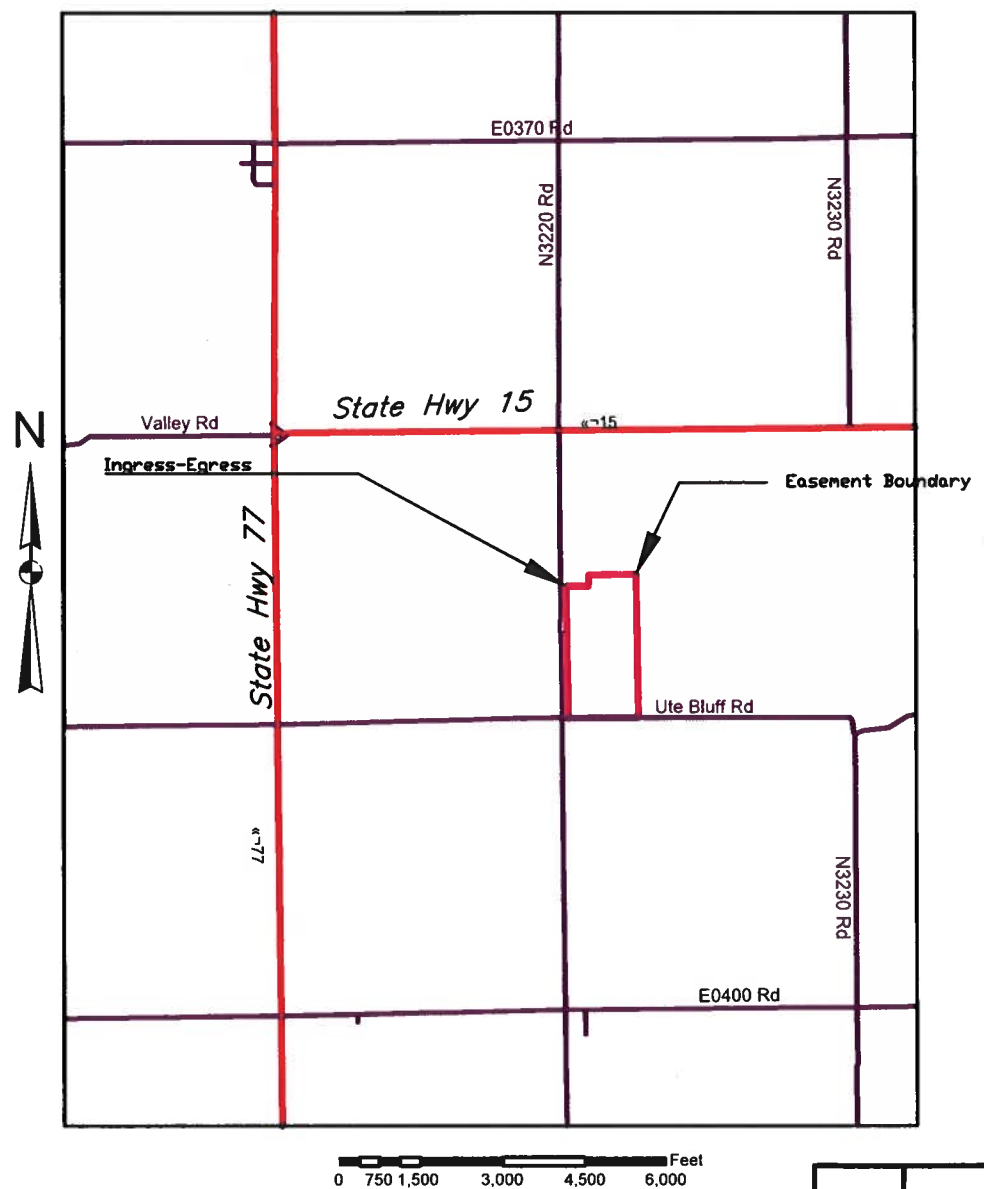


## INDEX OF DRAWINGS



| Page No. | Sheet Name |
|---|---|
| 1 | Cover Sheet - Vicinity Map |
| 2 | Plan Map - Full Easement |
| 3 | Unit 2 - Plug & Nipple Canopy Riser |
| 4 | Unit 3 - Plug & Nipple Canopy Riser |
| 5 | Embankment Details |
| 6 | Embankment Details. Cont. |
| 7 | Trash Guard Details |
| 8 | Construction Details |
| 9 | Circle Pits - Deep Water Habitat |
| 10 | Unit 1 & Wetland Pond - Excavation Details |



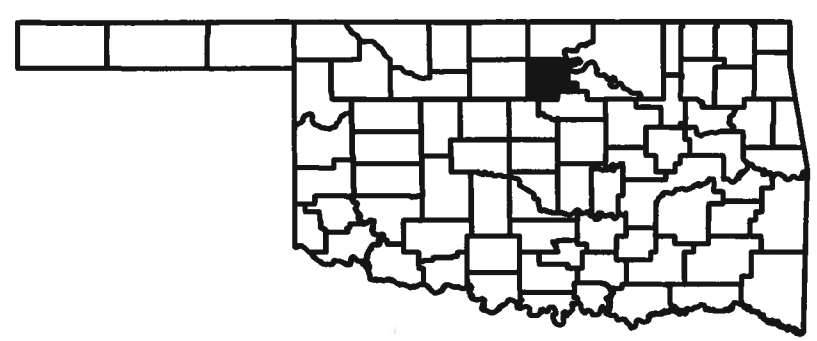

LOCATION OF NOBLE COUNTY, OK

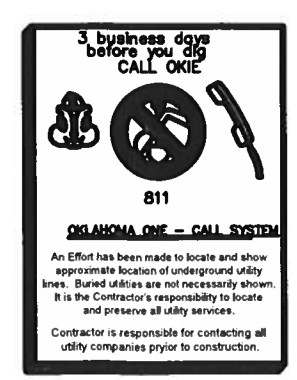


File Name: Vicinity Map_Cover Sheet_100.dwg
Drawing Name: OK-DWG-100
8/7/23 7:38 AM
Sheet 1 of 10

Designed: Dan Smith 5/2023
Drawn: Dan Smith 5/2023
Checked: R. Schlais 8/14/23
Approved: R. Schlais 8/14/23

COVER SHEET - VICINITY MAP

Steve Mornhinweg - WRE

W1/2 SW1/4 S24 T23N R1W Noble County, OK

USDA United States Department of Agriculture
Natural Resources Conservation Service

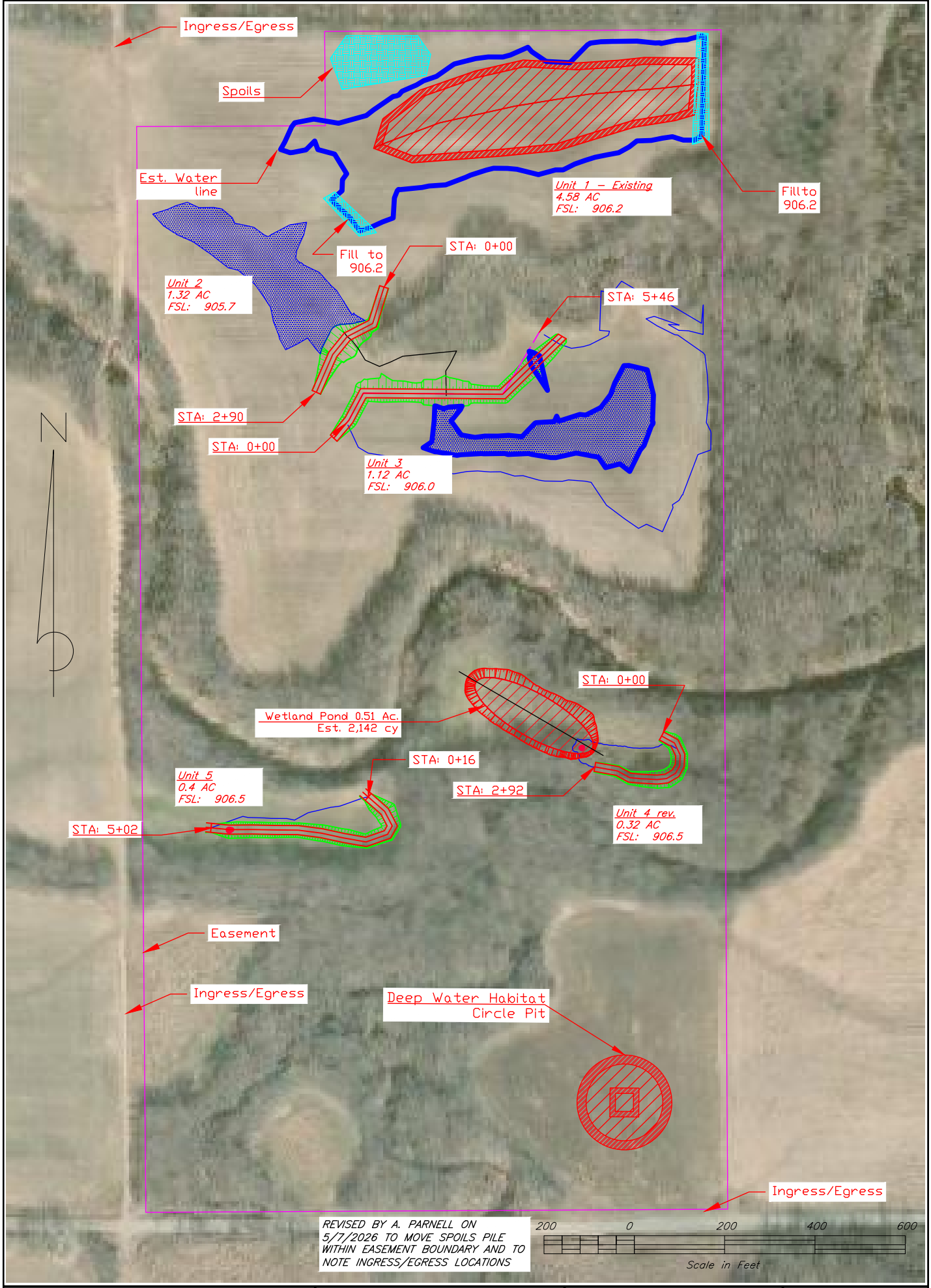


USDA United States Department of Agriculture

Natural Resources Conservation Service

EMBANKMENT DETAILS, Cont.

STEVE MORNHINWEG – WRE

SW Sec 24 T 23 N, R 1W, Noble County, Oklahoma

| | | Date |
|---|---|---|
| Designed | Dan Smith | 5/2023 |
| Drawn | Dan Smith | 5/2023 |
| Checked | A. Parnell | 5/2026 |
| Approved | ABIGAIL PARNELL Digitally signed by ABIGAIL PARNELL Date: 2026.05.08 10:40:30 -05'00' | 5/8/26 |

File Name: Mornhinweg proposal 3 Revised.dwg

Drawing Name: 100

5/8/26 11:53 AM

Sheet 2 of 10

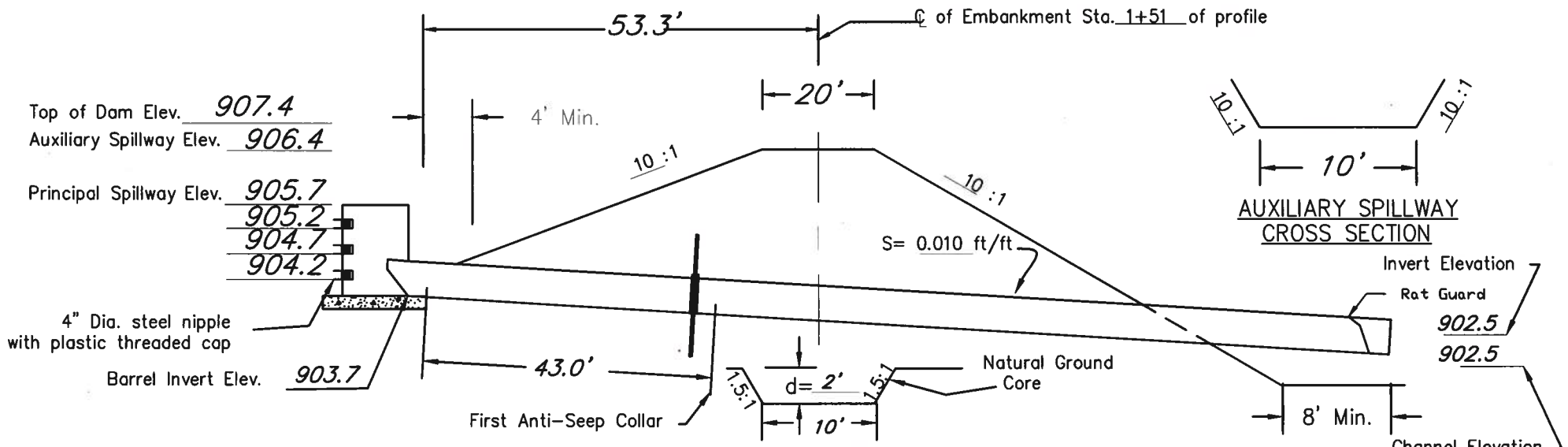


CROSS SECTION OF EMBANKMENT ALONG CENTERLINE OF PRINCIPAL SPILLWAY




AUXILIARY SPILLWAY
CROSS SECTION

Notes:
For Trash Guard Detail see drawing OK-DWG-No. PG. 6 .
Core Embankment from 1+26 – 1+76 as shown. Strip remainder of Embankment 6 inches.
Concrete shall be reinforced with one layer of 6" x 6" x 10 gage welded wire fabric in center slab or with polypropylene fibers (FRC).

**Riser**

2.5 Ft. of 36" I.D. of 0.25 inch thick welded steel pipe.

**Barrel**

122 Ft. of 18" I.D. of 0.22 inch thick welded steel pipe

**Anti-Seep Collars**

1 Anti-Seep Collars 5.5 Ft. x 5.5 Ft. spaced N/A Ft. apart.
Minimum thickness is 1/4".

| QUANTITIES | |
|---|---|
| Concrete | 1.8 Cu. Yds. |
| Earthwork | 1037 Cu. Yds. |

Est.

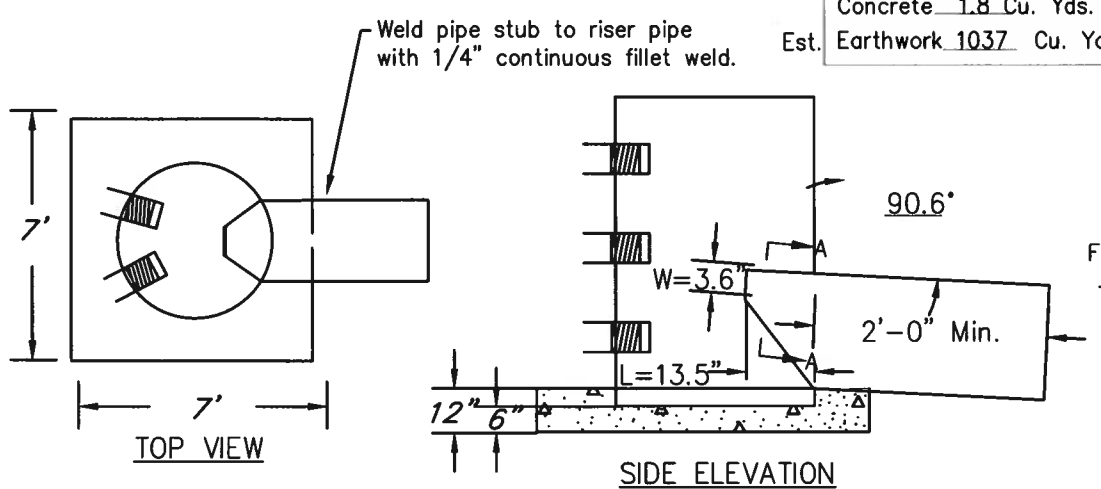


CROSS SECTION OF RISER

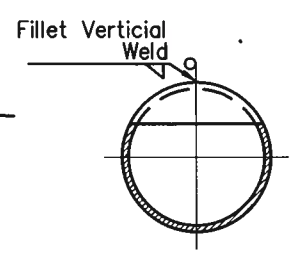


SECTION A–A

RAT GUARD MATERIAL:
- STAINLESS STEEL-24" DIA. OR SMALLER PIPE,
- ZINC DICHROMATE PLATED STEEL-GREATER THAN 24" DIA. PIPE

RAT GUARD
(AGRI-DRAIN OR EQUIVALENT)

File Name Unit_2_Okdwg606a.dwg
Drawing Name OK-DWG-100
8/9/23 7:38 AM
Sheet 3 of 10

Designed Dan Smith 8/2023
Drawn Dan Smith 8/2023
Checked 8/2023
Approved 8/2023

UNIT 2 - PLUG AND NIPPLE CANOPY RISER
WELDED STEEL WATER
CONTROL STRUCTURE

Steve Mornhinweg – WRE

W1/2 SW1/4 S24 T23N R1W Noble County, OK

USDA United States Department of Agriculture
Natural Resources Conservation Service

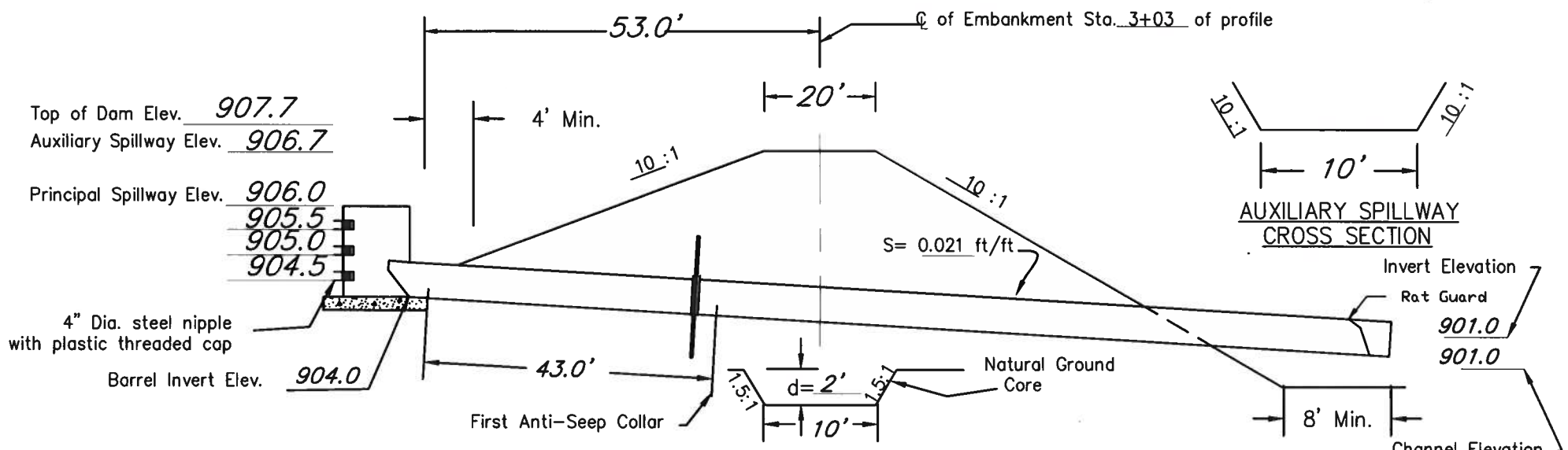


CROSS SECTION OF EMBANKMENT ALONG CENTERLINE OF PRINCIPAL SPILLWAY




AUXILIARY SPILLWAY
CROSS SECTION

Notes:
For Trash Guard Detail see drawing OK-DWG-No. PG. 6 .
Core Embankment from 2+62 – 3+12 as shown. Strip remainder of Embankment 6 inches.
Concrete shall be reinforced with one layer of 6" x 6" x 10 gage welded wire fabric in center slab or with polypropylene fibers (FRC).

| QUANTITIES | |
|---|---|
| Concrete | 1.8 Cu. Yds. |
| Earthwork | 1255 Cu. Yds. |

**Riser**

2.5 Ft. of 36" I.D. of 0.25 inch thick welded steel pipe.

**Barrel**

141 Ft. of 18" I.D. of 0.22 inch thick welded steel pipe

**Anti-Seep Collars**

1 Anti-Seep Collars 5.5 Ft. x 5.5 Ft. spaced N/A Ft. apart.
Minimum thickness is 1/4".

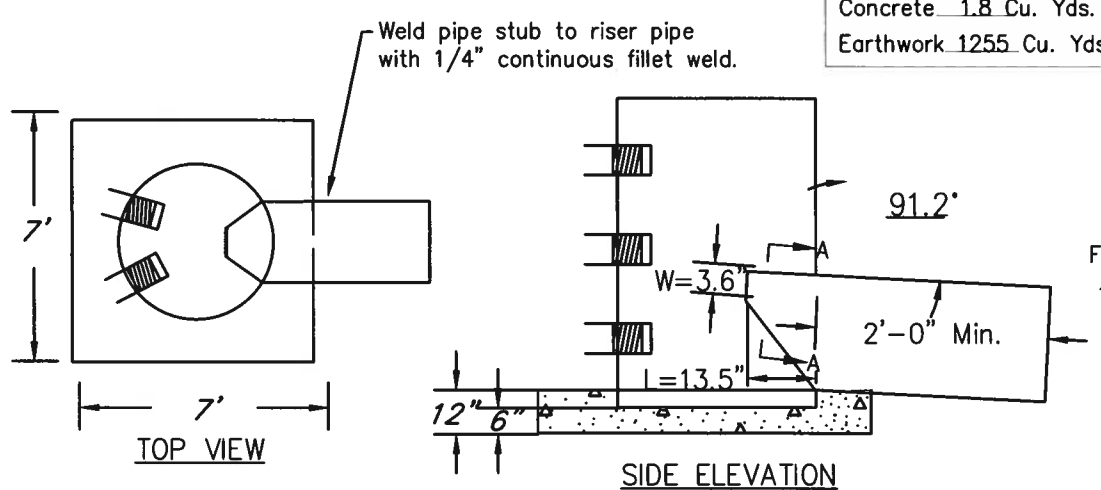


CROSS SECTION OF RISER

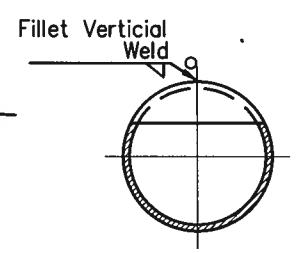


SECTION A-A

RAT GUARD MATERIAL:
- STAINLESS STEEL-24" DIA. OR SMALLER PIPE,
- ZINC DICHROMATE PLATED STEEL-GREATER THAN 24" DIA. PIPE

RAT GUARD
(AGRI-DRAIN OR EQUIVALENT)

File Name Unit_3_Okdwg606a.dwg
Drawing Name OK-DWG-100
8/9/23 7:45 AM
Sheet 4 of 10

Designed Dan Smith 8/2023
Drawn Dan Smith 8/2023
Checked R. Sellas 8/2023
Approved R. Sellas 8/2023

Unit 3 - PLUG AND NIPPLE CANOPY RISER
WELDED STEEL WATER
CONTROL STRUCTURE

Steve Mornhinweg – WRE

W1/2 SW1/4 S24 T23N R1W Noble County, OK

USDA United States Department of Agriculture
Natural Resources Conservation Service

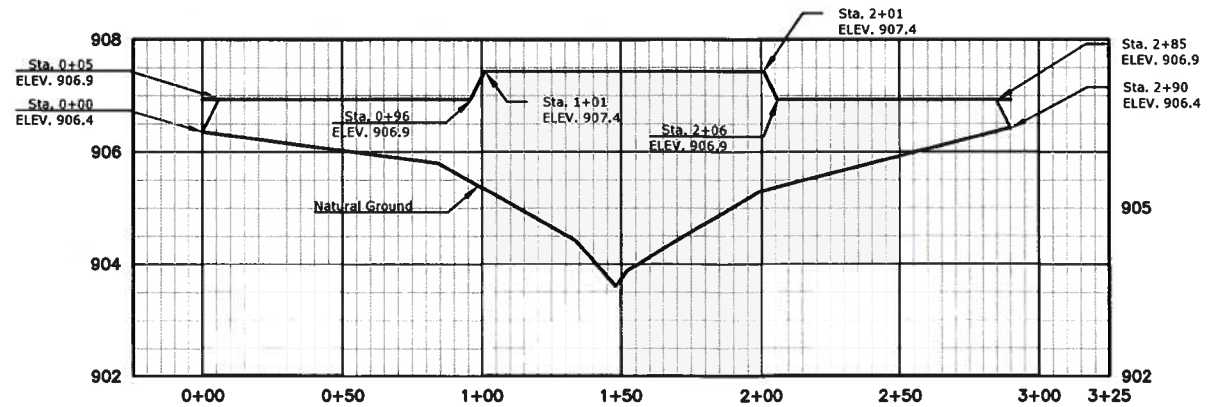


UNIT 2 – PROFILE

*Estimated Yardage – 1,037 cy*

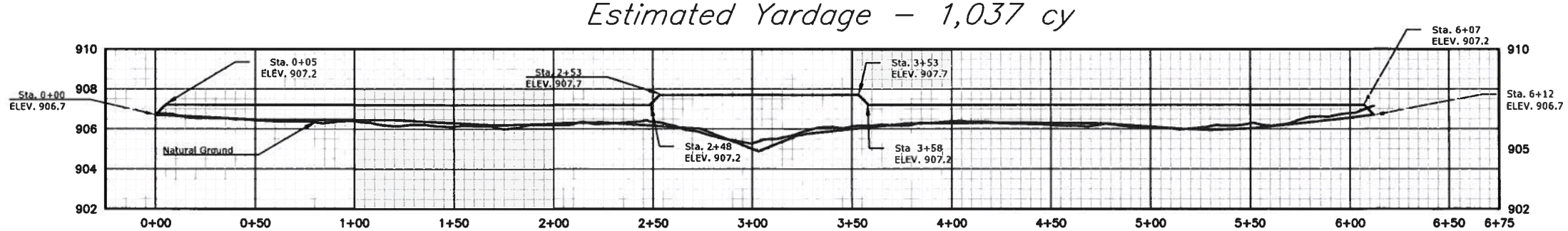


UNIT 3 – PROFILE

*Estimated Yardage – 1,255 cy*

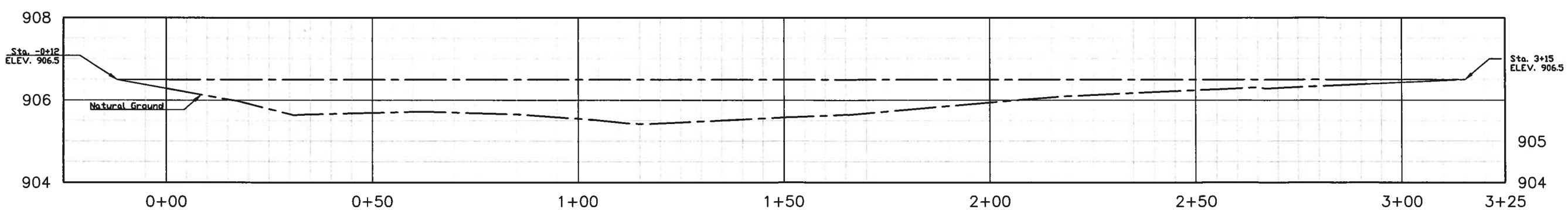


*UNIT 4 – PROFILE*

*Estimated Yardage – 361 cy*

| | | Date |
|---|---|---|
| Designed | Dan Smith | 5/2023 |
| Drawn | Dan Smith | 5/2023 |
| Checked | | 8/2023 |
| Approved | | 8/2023 |

EMBANKMENT DETAILS
STEVE MORNHINWEG – WRE

*Noble County, Oklahoma*

*SW Sec 24 T 23 N R 1W*

United States Department of Agriculture
Natural Resources Conservation Service

File No.
*Mornhinweg proposal 3 wout alignments.dwg*

Drawing No.
*100*

*8/7/23 10:07 AM*

Sheet *5* of *10*

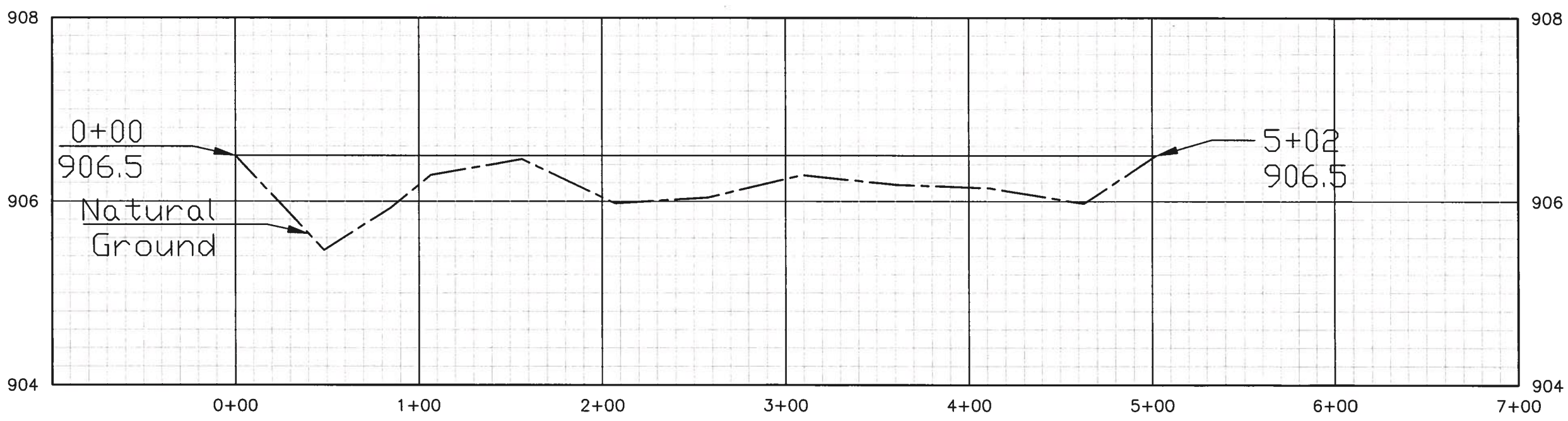


UNIT 5 – PROFILE

*733 CY*

| | | Date |
|---|---|---|
| Designed | *Dan Smith* | *5/2023* |
| Drawn | *Dan Smith* | *5/2023* |
| Checked | *R. Sellers* | *8/2023* |
| Approved | *R. Sellers* | *8/2023* |

# EMBANKMENT DETAILS, CONT.
# STEVE MORNHINWEG – WRE

*Noble County, Oklahoma*

*SW Sec 24 T 23 N R 1W*

United States Department of Agriculture

Natural Resources Conservation Service

File No. *Mornhinweg proposal 3 wout alignments.dwg*

Drawing No. *100*

*8/7/23 10:07 AM*

Sheet *6* of *10*

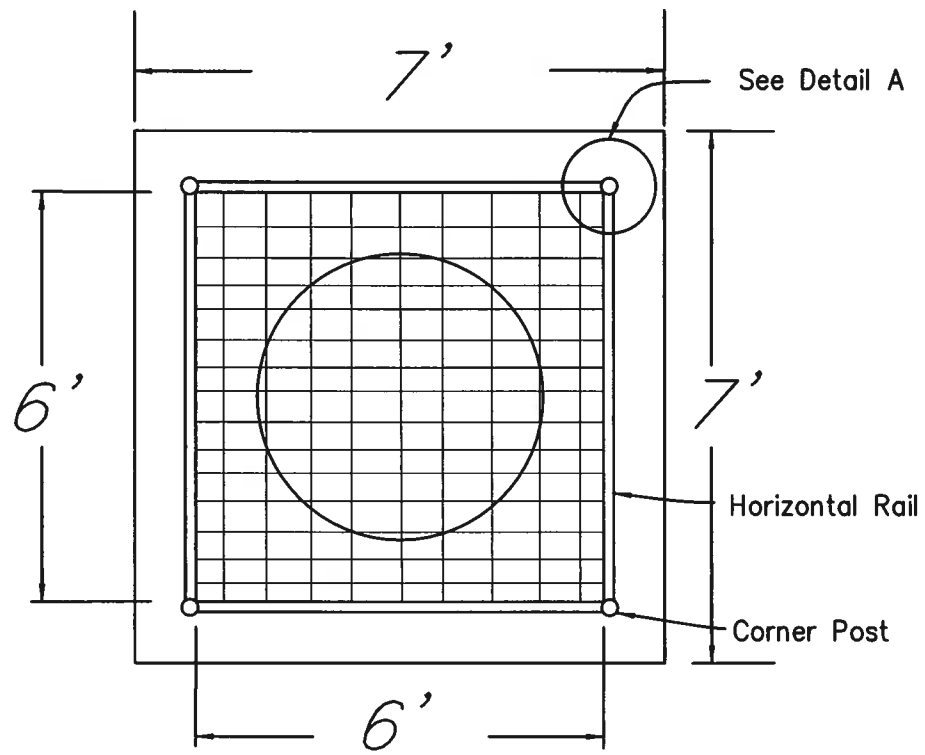


PLAN

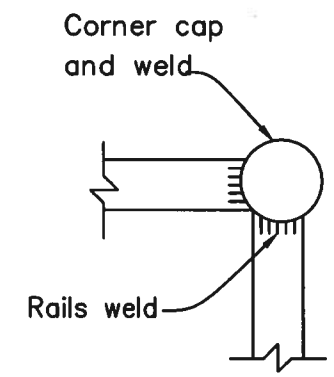


DETAIL A

*NOTES:*

*1. Fasten panels to each side and top with double looped, 10 gage insulated copper wire securely twisted. 2' maximum spacing for wire loops, with minimum 2 loops per post and 5 loops per brace.*

*2. Panels shall be 1/4" galvanized steel rods welded together to form a panel. Maximum spacing of rods shall be 6 inches vertical and 8 inches horizontal.*

*3. Panels placed across top shall be securely fastened together per Note 1. Trim panels to fit.*

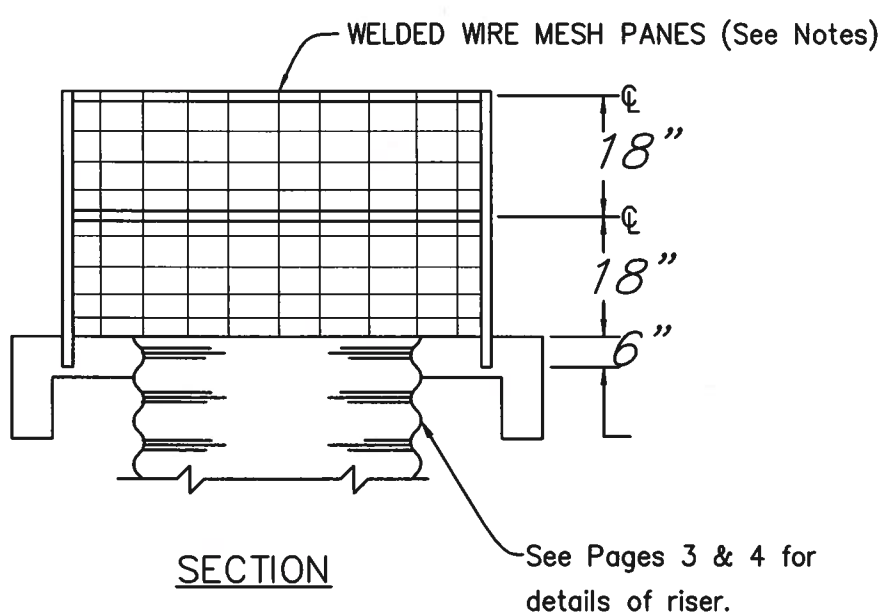


SECTION

TRASH GUARD DETAILS

1. Corner posts are 1 ½" NPS pipe (ASTM A53 Schedule 40).
2. Rails are 1" NPS pipe for 8.9' and less lengths. (ASTM A53 Schedule 40).
3. Cap and solid weld tops of corner posts. Attach rails with continuous weld to corners.
4. All metal poles and braces are to be painted.

NOT TO SCALE

| | | |
|---|---|---|
| File Name Okdwg231a.dwg | Drawing Name OK-DWG-100 | 7/10/23 1:37 PM Sheet 7 of 10 |
| Designed Dan Smith 7/2023 | Date | |
| Drawn S.E. Schneider 11/2016 | | |
| Checked R. Schlenker 8/2023 | | |
| Approved R. Schlenker 8/2023 | | |

TRASH GUARD DETAILS
FOR CANOPY DROP INLET
(LESS THAN 9 FEET LENGHTS)
Steve Mornhinweg – WRE Units #2 & #3
W ½ SW ¼ S24 T23N R1W
Noble County, OK

USDA United States Department of Agriculture
Natural Resources Conservation Service

TYPICAL SECTION OF WETLAND POND

NOT TO SCALE

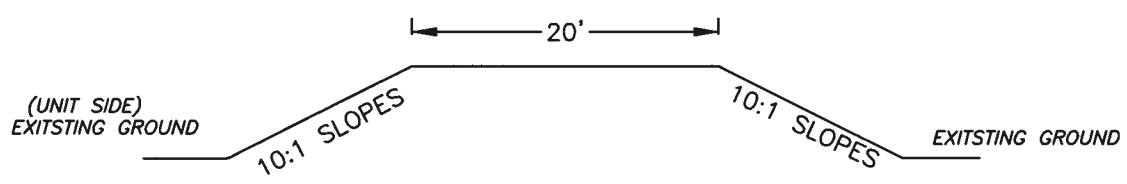


TYPICAL SECTION OF WETLAND EMBANKMENT

NOT TO SCALE

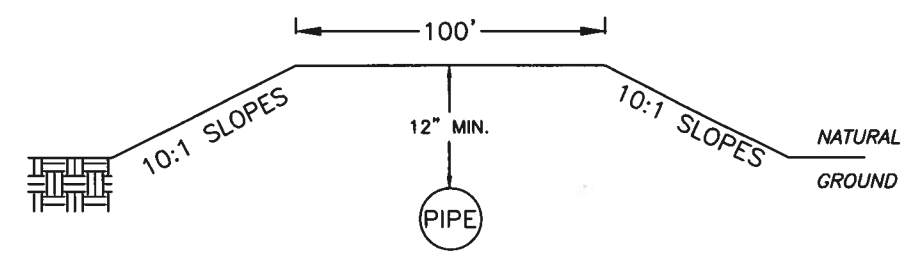


PIPE COVER DETAIL

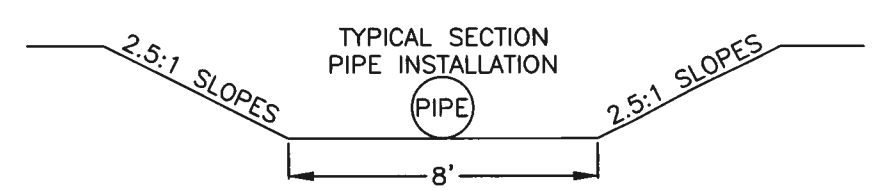


PIPE INSTALLATION & REMOVAL DETAIL

| | | Date |
|---|---|---|
| Designed | Dan Smith | 05/23 |
| Drawn | Dan Smith | 05/23 |
| Checked | R. Sellers | 8/23 |
| Approved | R. Sellers | 8/23 |

CONSTRUCTION DETAILS

STEVE MORNHINWEG - WRE

Noble County, OK

W ½ SW ¼ Sec. 24-T23N-R1W

United States Department of Agriculture

Natural Resources Conservation Service

File No. ------

Drawing No. 100

Sheet 8 of 10

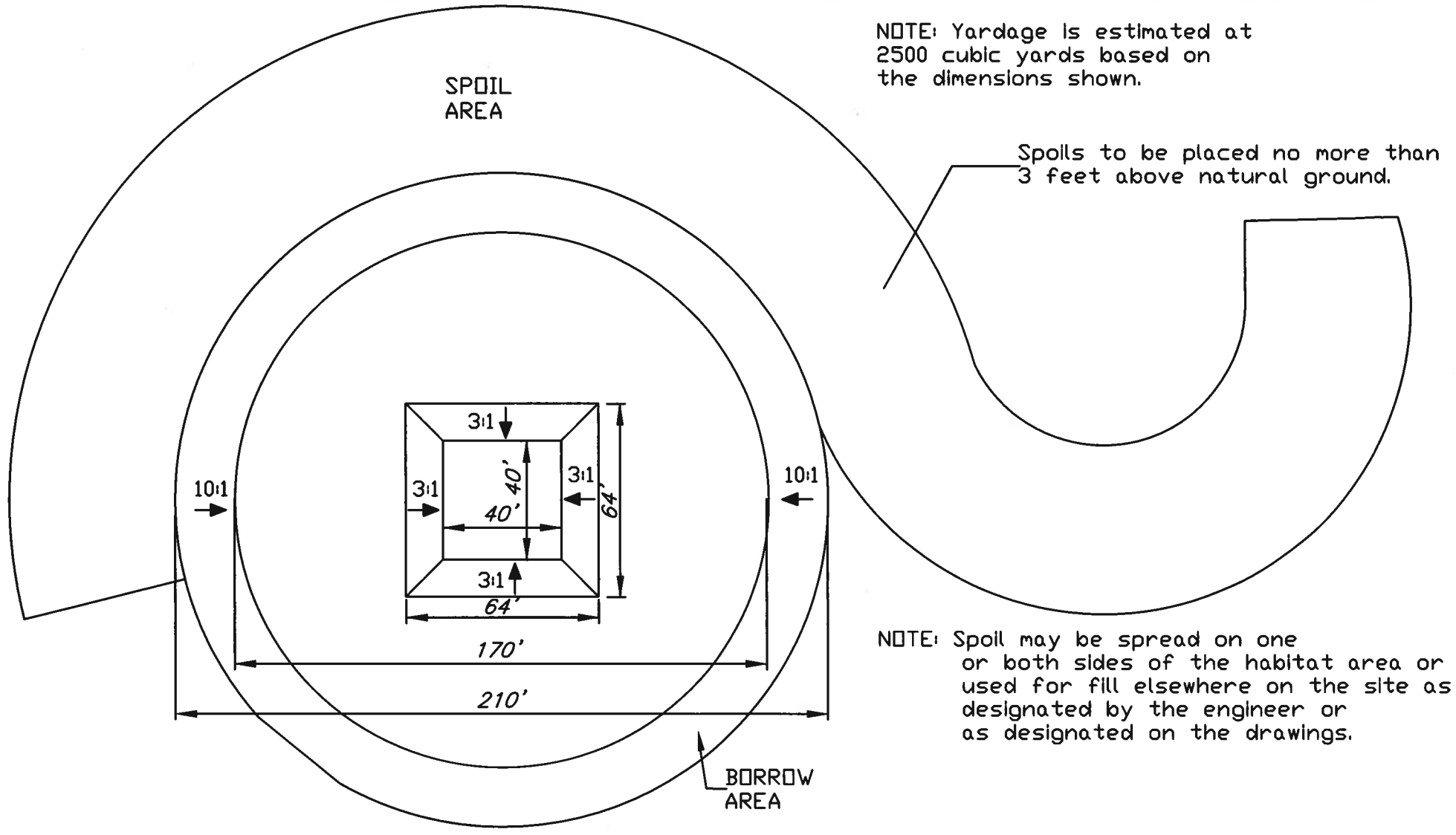


NOTE: Yardage is estimated at 2500 cubic yards based on the dimensions shown.

Spoils to be placed no more than 3 feet above natural ground.

NOTE: Spoil may be spread on one or both sides of the habitat area or used for fill elsewhere on the site as designated by the engineer or as designated on the drawings.

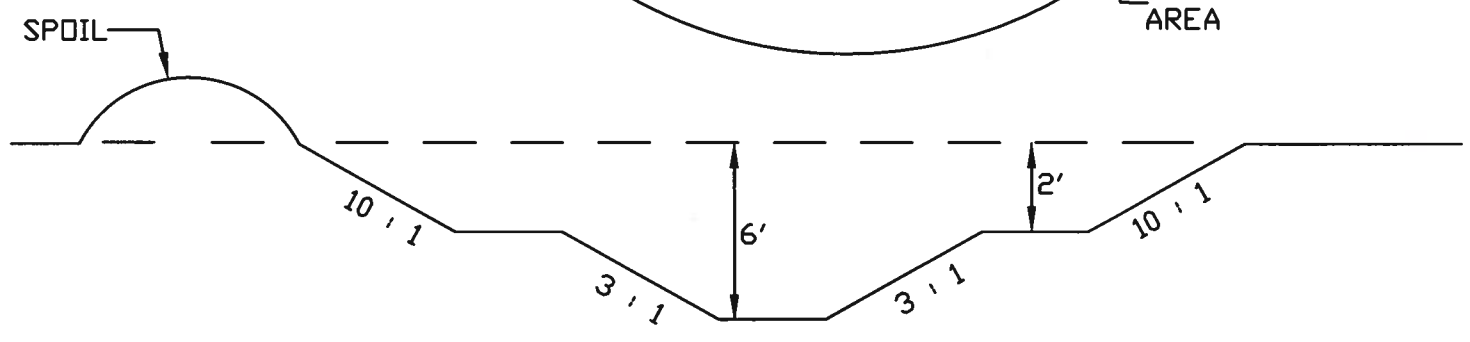


TYPICAL SECTION OF HABITAT

(SEE NOTE FOR SPOIL DISPOSAL)
(NOT TO SCALE)

This circle pit meets specifications

Signature _____

| | |
|---|---|
| File Name | Full Circle Deep Water Habitat.dwg |
| Drawing Name | OK-DWG-100 |
| | 3/20/23 9:59 AM |
| | Sheet 9 of 10 |
| Designed | Dan Smith 5/2023 |
| Drawn | Dan Smith 5/2023 |
| Checked | 8/23 |
| Approved | 8/2023 |

CIRCLE PITS - DEEP WATER HABITAT
CONCEPTUAL SKETCH

Steve Mornhinweg - WRE

W1/2 SW1/4 S24 T23N_R1W Noble County, OK

USDA United States Department of Agriculture
Natural Resources Conservation Service

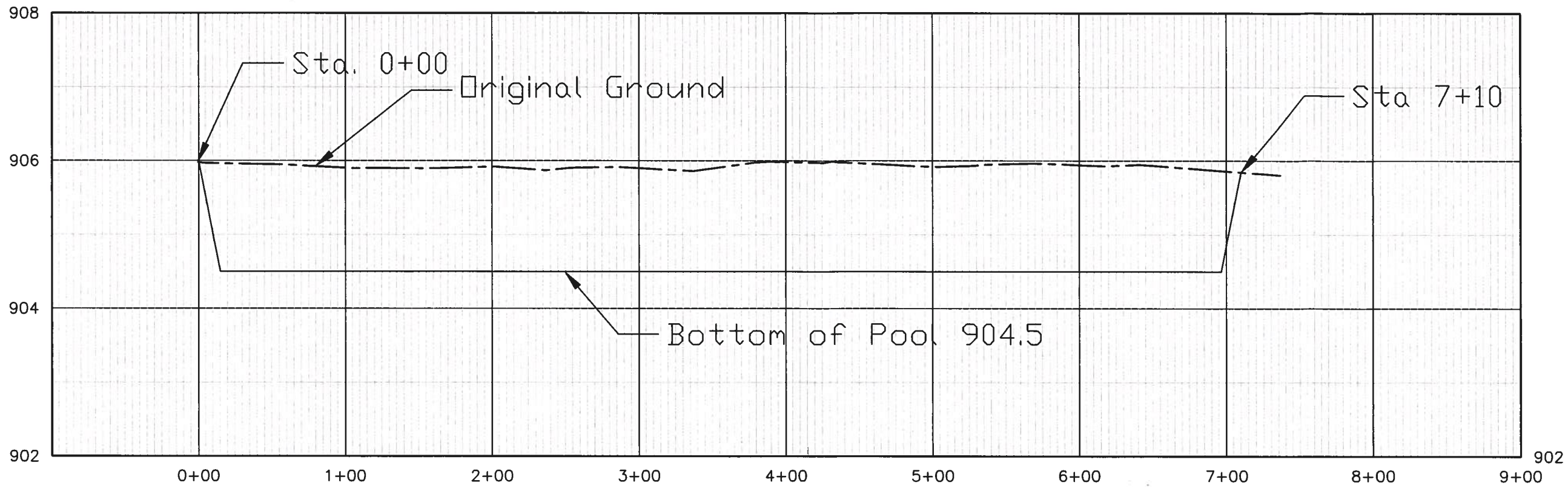


Unit #1 Excavation PROFILE *Estimated Yardage – 5,048 CY*

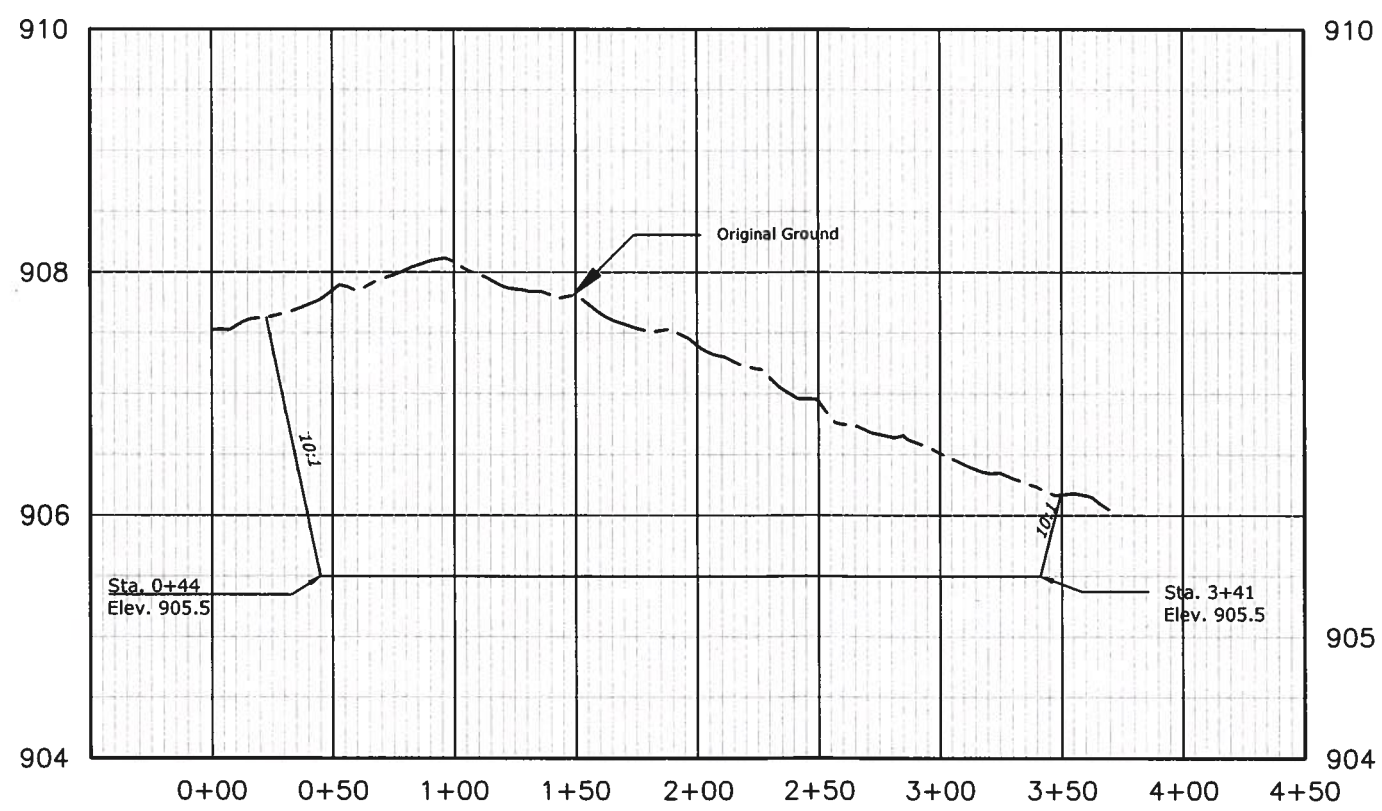


Wetland Pond PROFILE *Estimated Yardage – 2,142 CY*

| | | Date |
|---|---|---|
| Designed | Dan Smith | 5/2023 |
| Drawn | Dan Smith | 5/2023 |
| Checked | | 8/2023 |
| Approved | | 8/2023 |

*Unit 1 & Wetland Pond – Excavation Details*

STEVE MORNHINWEG – WRE

*Noble County, Oklahoma*

*SW Sec 24 T 23 N, R 1W*

United States Department of Agriculture

Natural Resources Conservation Service

File No. *Unit 1 Excavation.dwg*

Drawing No. *100*

*8/7/23 10:50 AM*

Sheet *10* of *10*