SPECIAL PACKAGING INSTRUCTION

CODE ID	SPI NO (TPO)
98748	F 01-252-1078
	SHEET 1 OF 3

PART OR DRAWING NO.	NATIONAL STOCK NO.	CURR REV
9528M96G03	2840-01-252-1078 JF	B

ITEM NOMENCLATURE
SEAL STAGE 1

ORIG DATE 88097

ILL P. BROWNING
PS F. PITTMAN
CHK C. STONEKING
ENGR M. HEADLEE
AUTH J. PATLAN

PRESERVATION IAW MIL-STD-2073
METHOD 10

QUP 001

ICQ 000

CLEANING IAW MIL-STD-2073

DRYING IAW MIL-STD-2073

PRESERVATIVE N/A

MARKING IAW MIL-STD-129

SPECIAL MARKINGS:

A) SPI NO. F 01-252-1078
B) REUSABLE CONTAINER AND DUNNAGE DO NOT DESTROY.
C) NOT FOR OUTSIDE STORAGE.
D) FRAGILE

CLOSURE IAW ASTM-D-1974

PACKING AS SPECIFIED BELOW AND BILL OF MATERIALS

LEVEL	SPEC	STYLE	TYPE	CL	VRTY	GR	TR
A	N/A	N/A	N/A	N/A	N/A	N/A	N/A
B	ASTM-D-5118	FTC	CF	W/R	SW	V3C	N/A

	LEVEL A	LEVEL B
GROSS CU FT	N/A	1.802
GROSS WT LBS	N/A	16.5
DESIGN FRAGILITY G	N/A	N/A

	LENGTH	WIDTH	DEPTH
CNTNR I.D.	29 1/4	29 1/4	3
CNTNR O.D.	30 3/8	30 3/8	3 3/8
ITEM DIM	24 7/8	24 7/8	2 1/2
ITEM WT LBS	10.00		

REVISIONS

LTR	DESCRIPTION	DATE	ILL	APRVD
	NEW	88097		JL
A	REVISED PAGE 1.	01067	PW	DW
B	UPDATE SPECIFICATIONS	08309	PLB	FDP

NOTES:

1) LAMINATE PARTS (2) TO REQUIRED THICKNESS WITH ADHESIVE (4).

TABLE ONE

NSN	PART NUMBER

PART NO.	QTY.	NOMENCLATURE OR DESCRIPTION	SIZE (INCHES UNLESS SPEC)	MATERIAL SPECIFICATION
1		CONTAINER I.D.	29 1/4 X 29 1/4 X 3	SEE LEVEL OF PACK
2	2	TOP & BOTTOM INSERTS	29 X 29 X 1/2	ASTM-D-4727
3	A/R	WRAP	SIZE AS REQUIRED	MIL-PRF-121
4	A/R	ADHESIVE	AS REQUIRED	A-A-59692

SPI NO. F 01-252-1078

SPECIAL PACKAGING INSTRUCTION	CODE ID 98748	SPI NO (TPO) F 01-252-1078
ITEM NOMENCLATURE SEAL STAGE 1		SHEET 2 OF 3

SEAL STAGE 1

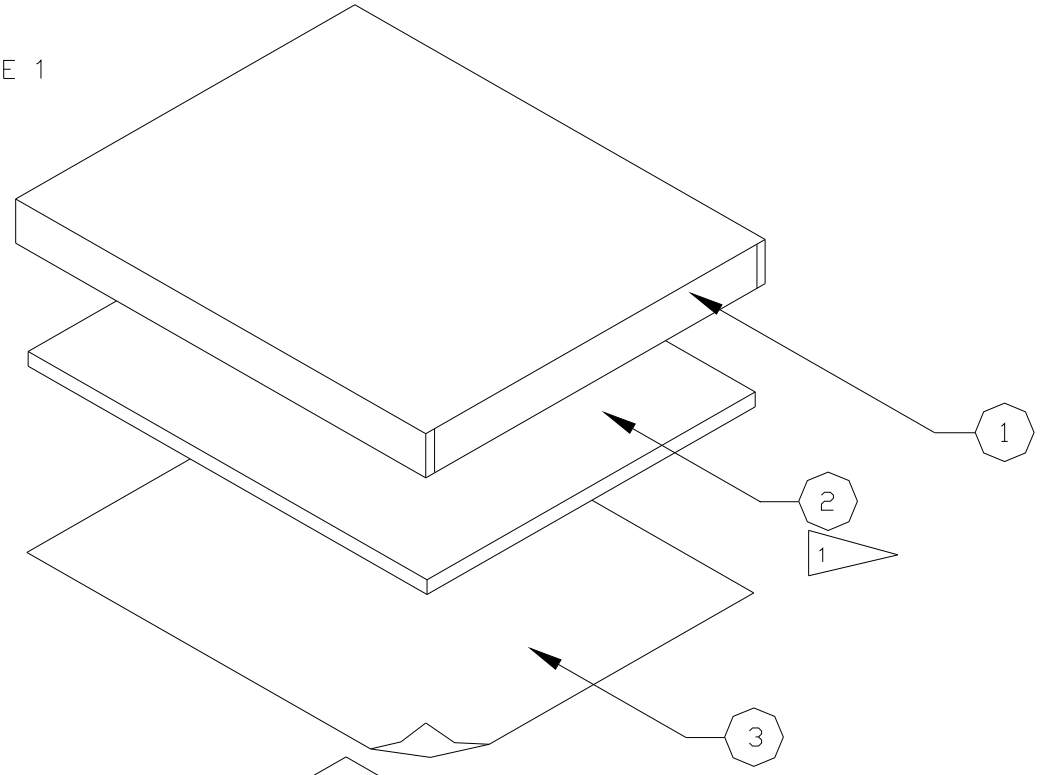

ITEM

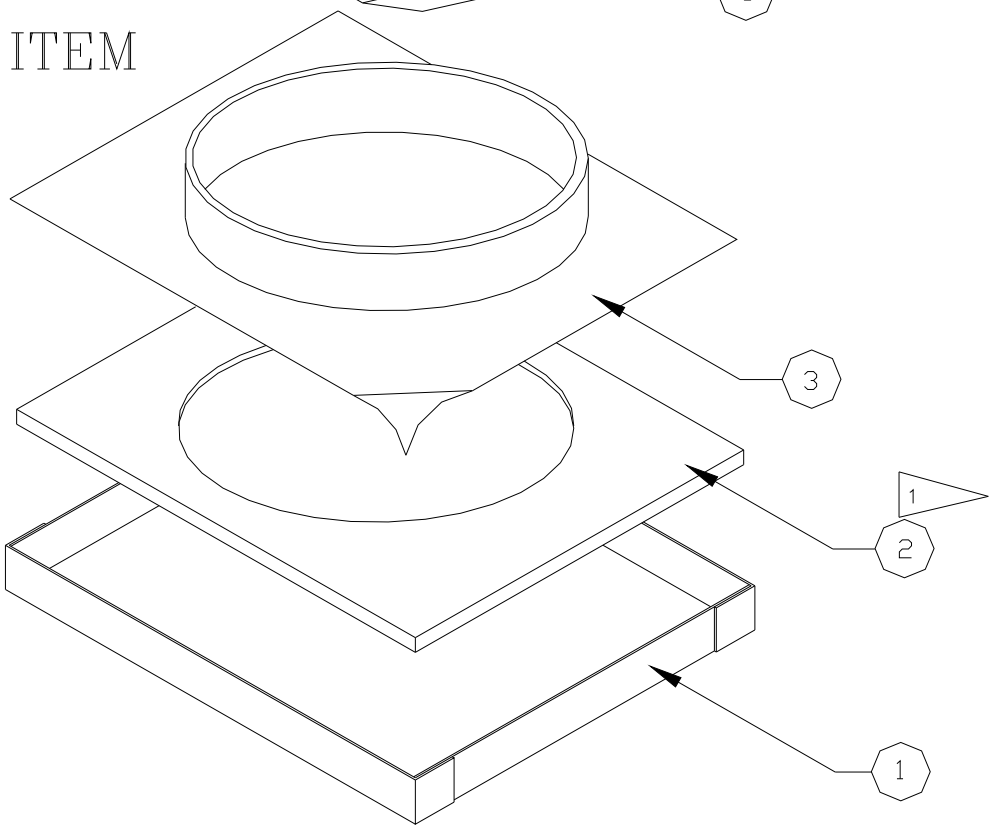

SPECIAL PACKAGING INSTRUCTION	CODE ID 98748	SPI NO (TPO) F 01-252-1078
ITEM NOMENCLATURE SEAL STAGE 1		SHEET 3 OF 3

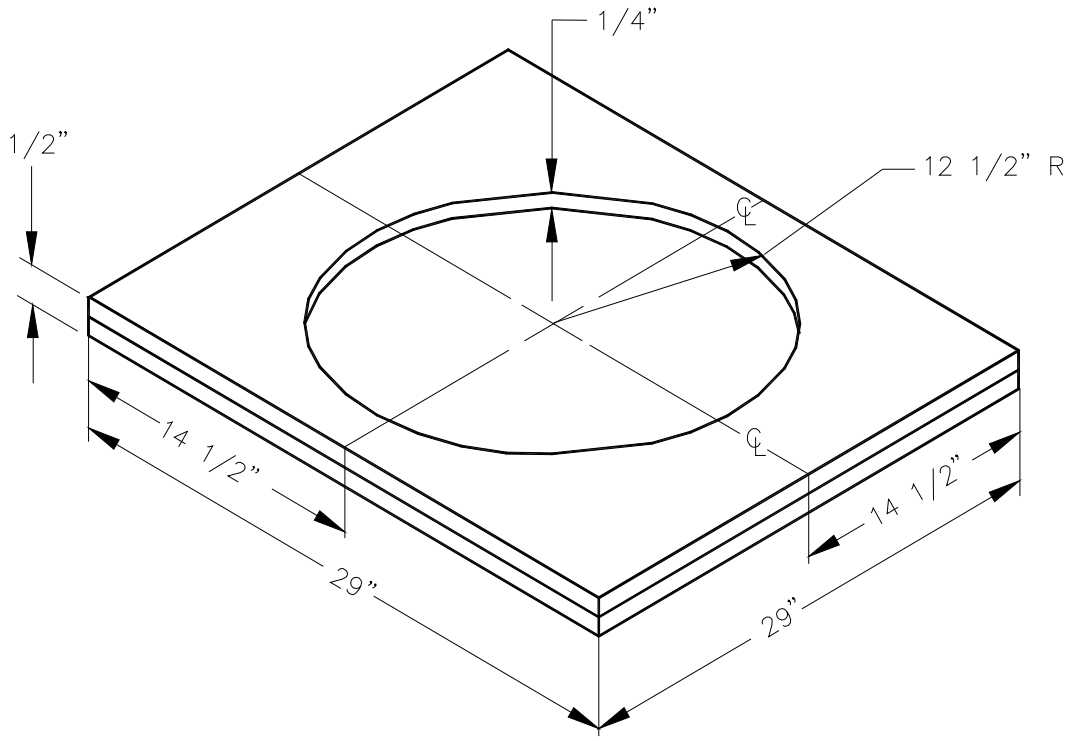

TOP & BOTTOM INSERT (2)