CONSTRUCTION & SECURITY SPECIFICATIONS

Military Recruiting Facilities ~ Production Offices

(CPP's ~APPENDIX "A")

VERSION: FY 26.1

(Leased Premises Address)

(Date / Revised Date)

GENERAL STANDARDS (GS)

A. General Guidance:

Each designated Military Service to be located at this recruiting facility will have their specific standards included in the following **General Standards (GS), enclosures and attachments.** Any significant departure from either the intent of these construction specifications or the approved Chief Architect floor plan will require prior approval of the **Corps of Engineers (COE); Representative / P.O.C.:_____ phone #:_____, email:_____.**

IMPORTANT: NOTHING IN THESE SPECIFICATIONS WILL PROHIBIT THE SUBSTITUTION, WITH PRIOR APPROVAL OF THE COE, OF AN EQUIVALENT PRODUCT, SERVICE OR FINISH (TO INCLUDE ALL LICENSING, SOFTWARE, HARDWARE PARTS, COMPONENTS, ETC. MEETING THE SPECIFIED REQUIREMENTS HEREIN). LESSOR / CONTRACTOR(S) TO PROVIDE WRITTEN CERTIFICATION OF EQUIVALENCY TO COE REPRESENTATIVE PRIOR TO APPROVAL / INSTALLATION.

REQUIRED BY LAW: For all supplied communication requirements and electronic security applications (see paragraph K below), the Lessor (or their contractors) are PROHIBITED (2019 N.D.A.A. law and any subsequent modifications) from providing to the Government any such equipment or services as a substantial or essential component, or critical technology as part of any system. These **PROHIBITED** security / telecommunications products are from any of the following source entities, any subsidiary or affiliate of such source entities: 1) The People's Republic of China; 2) Huawei Technologies Company; 3) ZTE Corporation; 4) Hytera Communications Corporation, Hangzhou Hikvision Digital Technology Company; 5) or Dahua Technology Company. **Lessor (or contractors) must certify the equipment is not from any of these sources and provide written confirmation to the COE Representative prior to installation. Upon acceptance of the premises, the Lessor or Contractor must re-certify in writing what equipment has been installed, and that all components comply with the 2019 N.D.A.A. requirements.**

1. **Drawings, Plans and Permits:** The Lessor is responsible for all permits (including low voltage), drawings, constructing, operating, maintaining, and obtaining a Certificate of Occupancy for the leased premises in accordance with the lease / solicitation requirements. Any changes on the build out of the leased premises should be addressed directly to the COE representative. The recruiters for the subject office(s) are NOT authorized to change or modify anything related to the construction of the office.

   The attached conceptual drawing / Chief Architect floor plan provided by the COE representative will be used for design, planning, and bid purposes.

   a. **Required Lessor deliverables for Architectural / Engineering (AE) drawings:**
      1. The Lessor is responsible for coordinating with the COE in the development of these plans.
      2. Lessor's AE drawings must be created and provided to COE representative prior to scheduling the pre-construction "kickoff" meeting.
      3. COE representative to review and approve all Lessor provided AE drawings prior to starting construction activities or premises alterations. No construction shall start until the COE representative provides an official Notice to Proceed (NTP) for construction.
      4. **IMPORTANT:** Conceptual drawings / floor plans and/or AE drawings in draft or final form shall **NOT** be posted online or provided to third parties for security reasons.
      5. AE Drawing sets to include at a minimum (but not limited to) the following:
         i. Architectural cover sheet, site, and parking plan with all measurements / details / abbreviations / symbols.

ii. Leased premises with all room dimensions to include square foot allocations, wall, door, window, structural columns, key notes, etc.

iii. Mechanical, Electrical and Plumbing (MEP) Engineering Drawings:
- Including low voltage communications / wiring / hardware / and controls.
- Aiphone, CCTV, roller shade controls and security system components.

iv. Interior design drawings for walls, ceilings, and floor finish plan with schedules.

v. Interior / Exterior elevations with graphics and signage details / schedules, etc.

vi. Interior / Exterior door and window hardware schedules and finish details, etc.

vii. **IMPORTANT:** Once finalized and approved by local municipalities, FINAL AE drawings shall be provided to the COE in the following electronic formats to serve as a basis to resolve any issues of variance which may arise:
- PDF file(s) in 11" x 17" page format.
- Electronic DWG file(s).

2. **Codes and Standards:** The leased premises **must comply with all Federal, State and local construction standards, building codes and all other applicable laws**. Any variance must have prior approval by the authority having jurisdiction. Where conflicts between standards arise, the build-out of the recruiting office must comply with the most stringent requirements.
3. ***Only Energy Star*** labeled components and natural resource conserving / recyclable products shall be installed.
4. **Number of Recruiters:** For the purposes of determining the number of restrooms, keys, or desk-tenant stations (Video Intercom Entry Control – referenced hereafter as "EC") per Military Service, the following number (#) of recruiters for each Military Service is provided:
Army _____; Navy _____; Air Force _____; Marines _____;
Air Force Reserve _____; Air National Guard _____; Army National Guard _____.
5. **Alternate Pricing Integrators:** These are different companies that have the Armed Forces Specifications that can be used to purchase components from multiple distributors and product lines for potential better pricing.
   - Wesco – Matt Ridgeway: Matt.Ridgeway@anixter.com
   - IML Security Supply – Angi Strrubing: angi.struebing@imlss.com
     Mike Donohue: Mike.donohue@imlss.com
   - ADI Global – Aaron Waters: governmentsales@adiglobal.com
6. **General Notes:**
   a. These specifications do not preclude common sense considerations / solutions to any issues that may arise during the build-out of the leased premises. Any variation, deviation or departure from this specification must be approved in writing, by the COE Representative listed above.
   b. To minimize potential misunderstanding, on-site meetings between the Lessor, Contractor, and COE to be scheduled for pre-bid meetings (if necessary) & kick-off meetings prior to commencement of construction.
   c. The contractor is required to notify the COE representative and Lessor **at least five (5) working days** prior to commencement of work on the site.

B. Mechanical:

1. Plumbing / electrical / HVAC and mechanical service lines / facilities, if located within the leased premises, shall be enclosed within wall cavities. E*xposed ducts, piping, wiring, and/or conduit runs are not permitted in the offices or common areas of the leased premises. If there are Lessor / building mechanical rooms / space accessed from within the Government controlled premises,* this enclosed space may NOT, under any circumstances, be considered part of the Government leased premises or co-used for any other purposes.
2. **Heating, Ventilation and Air Conditioning (HVAC) - Lessor Required SHELL Components (subparagraphs a thru f):**
   a. HVAC systems shall be installed and operational, including, as appropriate, main and branch lines, VAV boxes, dampers, flex ducts, and diffusers, for an open office layout, including all building common areas. The Lessor shall provide conditioned air through medium pressure duct work at a rate of .75 cubic feet per minute per square foot and systems shall be designed with sufficient systems capacity to meet all requirements in this Lease.
   b. The HVAC system design shall conform to applicable temperature standards and operating practices (in accordance with ASHRAE Standard 62.1). HVAC system will be balanced to accommodate the

approved floor plan / AE drawing and operational needs of each Military Service. If not otherwise stipulated, the HVAC equipment shall be capable of maintaining a minimum temperature of **70** degrees Fahrenheit during the heating season and a maximum of **76** degrees Fahrenheit during the cooling season regardless of outside temperature. Areas affected by solar radiation (either excessive heat gain or loss) shall be accounted for by the Lessor within the design of the HVAC system.

c. Ventilation to the leased premises shall be provided in the most energy efficient and cost-effective manner. It will meet or exceed all applicable building code standards and local ordinances.

d. **Restrooms & Security Closets:** Shall have their own supply and return vents installed for adequate ventilation (minimum of 10 air changes per hour) for appropriate air flow heat dispensation.

e. **HVAC Filters:** To be placed in ceiling return vents for easy access / replacement by janitorial service staff. Locations to be noted on the A/E drawings. Where practicable, the Lessor is encouraged to use a MERV 8 (or greater) air filter.

f. **For energy efficiency requirements:**

1. When required by the State (e.g. - California Title 24) – all 5 ton or greater HVAC units / systems to incorporate:

i. Air-to-Air exchanger / economizer (if not already present).

ii. A "residential" style HVAC system with zoning / dampers to heat or cool specific areas as needed. Avoiding ductless / split HVAC systems if possible.

iii. Smart thermostat in each individual Military Service's office.

iv. Stand-alone HVAC system: ****NO** connection** to Government networks, internet, routers, or WiFi is allowed.

g. *The HVAC system, will be designed and provide temperature controlled thermostats in each individual Military Service office.* The contractor will coordinate with the COE on the determination of acceptable thermostat(s). A digital, 7-day programmable, code-protected thermostat shall be utilized. Thermostat's to be mounted in each individual Military Service "open office" areas.

3. **SYSTEMS COMMISSIONING:** The Lessor shall incorporate commissioning requirements to verify that the installation and performance of energy consuming systems meet the Government's requirements. These systems include, at a minimum, heating, ventilating, air conditioning (HVAC) systems and associated controls, lighting controls, and domestic hot water systems. In instances involving minimal improvements including system reconfiguration, recommissioning is required to ensure that the systems are operating properly.

a. The Lessor shall submit a written commissioning plan to the COE representative at least 60 days prior to Space acceptance. The plan shall include:

1. A schedule of systems commissioning; and

2. A description of how commissioning requirements will be met and confirmed.

b. Results of the system commissioning plan will be provided to the COE representative immediately following the test of the systems.

c. Indoor Air Quality: HVAC flush-out shall commence after construction ends and the leased space has been completely cleaned. All interior finishes, such as millwork, doors, paint, carpet, and acoustic tiles must be installed, and major volatile organic compound (VOC) punch list items must be finished. Prior to occupancy, **all** supply / return vents to be cleaned and free of construction debris / dust. Lessor shall install new filtration media and perform a building flush-out by supplying outdoor air to flush out VOC's.

C. Plumbing:

1. Potable water shall be provided to the leased premises. The Lessor shall verify the existing water supply meets all potable water standards. If deficient, the Lessor will be responsible for providing an acceptable, alternate water supply. The water heating system shall produce and maintain a hot water temperature of **105 degrees** for restrooms and the janitorial mop service sink. All water heater systems must be secured from public view / access.

2. **Restrooms:** At a minimum, a unisex restroom will be provided. Recruiting offices with **six (6)** or more authorized recruiters shall require two (2) restrooms. Lessor will confirm number of restroom facilities required at this location as _____. Restrooms shall contain, *at a minimum*, the following plumbing fixtures and approximate square footage:

a. **Unisex / Men's:** 100 sq. ft., 1 commercial toilet, 1 urinal, 1 sink, stainless steel partitions / urinal screens as required.

b. **Women's (if required):** 64 sq. ft., 1 commercial toilet, 1 sink.
c. **Restroom Fixtures & Accessories:** See para. G.8.
d. **If existing, restrooms to be updated with all appropriate paint, tile, fixtures, etc.**

3. **Drinking Fountain - Water Cooler:** The Lessor to install a stainless steel drinking fountain equal to Elkay EZ Series, EZS8WSSK, non-filtered electric water cooler, with an attached EZH20 bottle filling station. Location as shown on the approved floor plan / AE drawing.
4. **Janitorial Closet:** shall contain 1-floor mounted mop sink and service faucet with a hot and cold water supply.
5. **Pantry (Wet):** See each Military Services attachment for details.

D. <u>Electrical</u>:

1. **Electrical Distribution:** Each electrical circuit shall be 20 amp rated or greater as defined by the National Electrical Code (NEC). All power distribution equipment shall be required to handle the actual specified and projected loads with 10 percent spare load capacity. All electrical panels servicing the Government leased premises should be located within the leased premises. When located outside the leased premises (inside or outside the building) the panel(s) must be secured (locked).
   a. Outlets, Switches and Faceplates: Installation to be at industry standard height unless otherwise specified.
      1. Minimum Requirements: All power outlets in offices, storage / test rooms, and conference rooms (where applicable) shall be Quadplex's with a maximum of 8-foot spacing unless otherwise specified. All foyers / hallways and common areas shall have Duplex outlets with a maximum of 16 feet spacing.
      2. Installation at desktop or countertop level (as required) will be as specifically referenced on the approved floor plan / AE drawings.
      3. These items shall be color coordinated in standard white, unless otherwise specified or referenced differently within each Military Services' Attachment (for appropriate color variation).
      4. Ceiling and floorport outlets may be required in open office areas as identified on the approved floor plan / AE drawing.
   b. Specific Electrical Requirements:
      1. Restroom Fixtures (paragraph G.8.).
      2. Janitorial closet: outlet mounted 42" above finished floor (AFF); as shown on the approved floor plan / AE drawing.
      3. Single / dual roller shades (paragraph G.9.a.1).
      4. **Pantry (Wet or Dry):** See each Military Services attachment for details.
   c. <u>Communication / Commo Board Cabinets for EACH Military Service & Security Board Cabinet</u>: See paragraph E and K.1 for more details.
      1. Quadplex outlets to be flush mounted on the fire-retardant treated plywood backboard(s), and installed at the back of each 12U Cabinet at the lower left corner, as shown on ***ENCLOSURE #1c and 1d*.**
      2. Isolated copper grounding plate on each Commo / Security Board(s) connected to a green #6 ground wire will be attached to the building ground or grounding rod in accordance with code standards. An equivalent standard for isolated electrical ground installation is acceptable.
   d. <u>Conference / Multi-Purpose Rooms</u> (if present): Power outlets as shown on the approved floor plan / AE drawing to include one (1) recessed Legrand RFB4 floor box with brushed aluminum finish FloorPort Activation Covers. Configured with two (2) electrical duplex outlets, two (2) BLUE voice / data port jack outlets, one (1) HDMI female port, and with HDMI wire run to the non-CCTV television (TV) / monitor mounting pole (in the room). Floor box location to be confirmed with COE representative.
   e. **<u>Required wiring / data port jack colors</u>:** All data port jacks and straight-through (T568B) CAT 6 wiring shall be color coordinated, and labeled. All wiring shall be contained in appropriate conduit in walls and the ceiling interstitial / plenum space to be arranged in a tight compact arrangement / appearance in raceways.
      1. Military Services Comms (Voice & Data):
         i. Two (2) CAT 6 wiring & data port jacks color = BLUE.
      2. EC Systems (paragraph K.3):
         i. CAT 6 wiring & data port jack color = YELLOW.

3. CCTV / NVR systems (paragraph K.4) & Mounted TV / Monitors (paragraph D.4):
   i. CAT 6 wiring & data port jack color = RED.
4. Roller Shades (single or dual):
   i. CAT 6 wiring = GRAY.

2. **Interior Lighting:** UL listed light fixtures shall be capable of producing and maintaining a uniform lighting level of a minimum of **50** foot-candles of illumination at working surface height in all office spaces. All other non-working areas will have a minimum of 30 foot-candles of illumination at floor level.
   a. **LED:** Lighting in all office, hallways, display areas and test rooms will be a minimum of 2 x 4 flat panel, 4300 lumens, 4000k temperature, dimmable, energy efficient, LED light fixtures, with a minimum lifespan of 60,000 hours. In restrooms, mechanical rooms, security closets, janitorial closets and other smaller areas may require fixtures, similar 2x2 energy efficient, recessed LED fixtures will be provided. **Note:** If existing light fixtures differ from those specified, the Lessor will consult with the COE on their acceptability. If existing fixtures are used, LED ballast bypass lamps to be installed. Interior office spaces and test rooms to have wall mounted on-off switch with full range dimmers. All other areas to use standard commercial grade switches without dimmers.
   b. **Emergency Lighting:** Shall be built into the LED ceiling light fixtures, with an emergency driver component in order to maintain illumination throughout the means of egress. Light fixtures with emergency drivers are to be hardwired to maintain an adequate charge on battery pack to provide at least 1-½ hours of power to light as per NFPA 101. Each fixture to have a "test light indicator" (LED Combo Test Switch – (LCTS)) installed next to the fixture. The LCTS light color is preferred to be green (indicating the light and battery backup is in good working order). LCTS cover shall be white to match ceiling tiles.
3. **Exterior Lighting:**
   a. The Lessor will ensure building egress doors and designated government parking areas use energy efficient lighting with a minimum illumination of 5 foot-candles / square foot at ground level (or as required to adequately support CCTV operations).
   b. Front entrances: Where possible, install overhead recessed and/or flush lighting fixture located directly above facility front entrance (exterior) door(s).
   c. Secondary Egress: If not already present, an exterior security light shall be installed by the Lessor. Light fixture to be LED, equivalent to 150 watts or greater, with 'dusk-to-dawn' light sensor with manual override.
4. **Mounted Monitors:**
   a. CCTV Monitors: See CCTV system specifications in paragraph K.4.
   b. Service Specific Use / Non-CCTV Monitors (conference rooms, open area offices, etc.): Duplex power, and communications outlet boxes (with BLUE CAT 6 wire) to be installed and concealed above ceiling tiles directly above Monitor mounting location as indicated on the approved floor plan / AE drawing, with CAT 6 routed to the Military Service's Commo Board / Cabinet. Mounting height to be **8'-6" AFF** for top edge of Monitor. See paragraph K.4 notes for more details regarding Monitor mounting pole requirements.

E. **<u>Communications</u>:**
1. **Outlets, Switches and Faceplates:** See "Electrical" paragraph D.
2. **Security Closet:**
   a. **Security Board:** Within the Security Closet, Lessor to wall mount a ¾" thick, 4'-0" W x 8'-0" H fire-retardant treated plywood backboard, at **2'-0" AFF** (top edge of backboard to be trimmed 6" below drop ceiling if necessary). The security board location must have 36" of front clearance to facilitate access. See paragraph D for electrical requirements, and paragraph K.1 and ***ENCLOSURE #1c*** for Security Board diagram requirements / layout.
   b. **Communications Board / Commo Board:** Within the Security Closet, Lessor to wall mount a ¾" thick, 4' to 8' W x 8'-0" H fire-retardant treated plywood backboard, at **2'-0" AFF** (top edge of backboard to be trimmed 6" below drop ceiling if necessary). The Comm Board location must have 36" of front clearance to facilitate access. See paragraph D. for electrical requirements and an overall layout as shown on ***ENCLOSURE #1a and 1d***.
      1. A wall mounted Comms cabinet (**Tripp Lite Model #SRW12UDP**) to be installed as a dedicated comms cabinet <u>for each Military Service</u>.

2. Lower row of comms cabinet (s) to be mounted directly on the Commo Board. Top of cabinet to be at 48" AFF with 12" of clearance between cabinets on all sides (horizontal and vertical) for airflow.
3. Upper row of Comms Cabinet (s) to be aligned and mounted with bottom of cabinet at 60" AFF.
4. Comm Cabinets to be **uniquely** keyed with each Service(s) receiving 3 keys.

3. **Demarc Requirements:** The building demarcation point provided by the Lessor must be secured from public access.
   a. If required, mitigation to secure the demarcation point shall be coordinated with the COE.
   b. Appropriately sized communications conduit to be installed from the building demarc point to the Military Service(s) Commo Board. Two (2) pull strings are required for each Military Service, and used by their respective communications provider. See ***ENCLOSURE #1a and 1b***.
4. **Low Voltage / Communications (See *ENCLOSURE #1a, 1b, 1c and 1d* for a diagram of requirements / layout):**
   a. **Outlets / Wiring:** These voice / data port outlets will be vertically aligned and installed within 2" horizontally on each office space electrical outlet, so the tops of both outlets measure to the same height AFF, or as identified on the approved floor plan. Required 1" conduit terminating 12" above finished wall height. See Paragraph A.1. Permits.
      1. Security and Communications Cabinet wiring requirements:
         i. Each Military Service will have straight-through BLUE data CAT 6 wires from their Communications Cabinet into their office space.
         ii. Ceiling access points (BLUE data CAT 6 wires) to be covered with a blank standard white faceplate.
         iii. The Security Cabinet will have yellow data CAT 6 wires into each Military Service's office space for the Aiphone desk-tenant stations.
            - Aiphone Desk-Tenant Station Outlets: Routed from the Security Cabinet PoE+ Switch(s) to designated wall location. These straight through CAT 6 yellow wire(s) labeled on both ends with a female RJ45 cover plate at the wall location.
            - With an 8' yellow patch wire from wall outlet to the desk-tenant station.
         iv. Each labeled wall plate (destination end) shall be equipped with a three (3) port female RJ45 plate. All data port jacks, and straight-through CAT 6 wire (T568B) will be color coordinated and labeled with identification number at both ends. Two BLUE data port jacks & BLUE wires will be routed to the Commo Board and one yellow data port jack & yellow wire routed to the Security Board PoE+ Switch(s).
         v. The RJ45 connector can then be connected to a modem, router, switch, adaptive security appliance, etc., which may be installed by the Military Service's telecom provider.
         vi. All Communications faceplates will be color coordinated with the electrical faceplates. See each Military Service Attachment for specific color requirements for faceplates.
         vii. **Required wiring / data port jack colors:** All data port jacks and straight-through (T568B) CAT 6 wiring shall be color coordinated and labeled. All wiring shall be contained in appropriate conduit in walls and the ceiling interstitial / plenum space to be arranged in a tight compact arrangement / appearance in raceways.
            - Military Services Comms (Voice & Data):
              a. Two (2) CAT 6 wiring & data port jacks color = BLUE.
            - EC Systems (paragraph K.3):
              a. CAT 6 wiring & data port jack color = YELLOW.
            - CCTV / NVR systems (paragraph K.4) & Mounted TV / monitors (paragraph D.4):
              a. CAT 6 wiring & data port jack color = RED.
            - Roller Shades (single or dual):
              a. CAT 6 wiring = GRAY.
         viii. All wiring for Commo / Security Board Cabinets components shall be color coordinated, labeled with Military Service and Port Identification numbers at both ends, have a minimum of three (3) feet of slack, contained in a horizontal or vertical organizer / enclosure (similar to Legrand Model #SHMC2RU) and in an organized manner. All wires shall be labeled referencing port numbers and Military Service as follows:
            - Air Force = "USAF".

- Air Force Reserve = "AFR".
- Army = "USA".
- Navy = "USN".
- Marine Corps = "USMC".
- Air National Guard = "ANG".
- Army National Guard = "ARNG".

b. Conduit / Raceways: Conduit capable of handling all data wires, access sized to fit ALL Military Services requirements (minimum of 1" conduit for two (2) Military Services at a location), as follows:

1. Building Demarcation point to **each** Military Service commo board, with two (2) pull strings per Military Service along with necessary junction box(s) for easy access. See paragraph E.3.
2. Voice and data wall / ceiling / floor outlet box conduit runs to the commo board shall terminate 12" above finished wall height. Note: See paragraphs D & K.
3. Wiring above ceiling (interstitial / plenum space) shall be contained in a raceway, if not installed in conduit.

c. *Military Services Responsibilities & Equipment*: Military Services are responsible for all other remaining communications requirements (not identified) via their service provider (e.g. – Verizon, AT&T, etc.). The telecom provider will typically install (but not limited to), the following:

1. **Any equipment / wiring / terminations required from the building demarcation point and/or junction box to the commo board, including equipment required to install service at the building demarc point and/or at the commo board such as modems, routers, PBX's, network switches, intermediate distribution frames, main distribution frames, distribution frames of any kind, patch panels, punch blocks, etc.**
2. **Any patch wires to connect their equipment.**
3. **All communications services (internet, Wi-Fi, cable TV if applicable (not part of the CCTV system), signal repeaters, etc.).**
4. **It is each Military Service's / telecom providers responsibility to coordinate with the Lessor, and to install or contract for all remaining installation requirements.**
5. **This would include any additional low voltage communications permits as required.**

F. Safety and Fire Equipment:

1. The Lessor shall be responsible for any required remediation of the fire protection system for fire code compliance.
2. **Exit Signs:** Shall be placed at exit ways from each Military Service office and leased premises. Signs shall be hardwired, UL listed, have 6" H lettering with backup batteries which shall provide at least 1-1/2 hours of power to light as per NFPA 101. Mounting: Must be capable of ceiling, wall, or end mounting; either single or double faced as required. The sign must utilize long-life LED lamps and self-diagnostics.
3. **One, 10-lb. ABC Dry-Chemical Fire Extinguisher with Semi-Recessed Protective White Cabinet:** Shall be installed towards the rear of each Military Service' office, and in the rear common area. Location of these units will be coordinated with the COE representative. Mounting height of protective cabinet should be 48" to 52" AFF (or as dictated by local building code regulations) with maximum travel distance to fire extinguisher of 75 feet.
4. **Dual Sensor Photoelectric / Ionization Smoke and Fire Detector-Alarm:** The Lessor shall ensure the location and installation of all smoke detectors are in accordance with manufacturer's recommendations for coverage area. At a minimum, at least one hardwired, 120-volt smoke detector with lithium battery backup and test function shall be installed, visible in each military recruiting office and common area, The alarm will be UL approved and capable of emitting an audible alarm of at least 85 dB at 10 feet.
5. **Fire Dept. Access Lockbox:** Where required for rapid emergency access, COE and Lessor shall coordinate to provide access keys to Government leased premises.

G. <u>Architectural Finishes-Fixtures-Supplies</u>: Ceilings / Walls to be finished according to the following standards for the required Level 5 finish on all visible surfaces:

1. Drywall: Gypsum Association GA-214 Standards.
2. Painting & Decorating Contractors of America (PDCA / PCA) Standard P1.
3. **Ceilings:** <u>Office ceilings shall be ***9 feet*** or no more than ***11 feet***, from floor to lowest obstruction.</u> All ceilings shall be installed on a level plane in each room.
   a. **Existing:** It will be the Lessor's responsibility to consult with the COE on the acceptability of the buildings existing ceiling system. If found acceptable, all ceiling tiles that are damaged, stained or sagging shall be replaced. If matching tiles cannot be found, or if replacement exceeds 50%, then all ceiling tiles shall be replaced and meet the standard for new ceilings.
   b. **New:** A suspended ceiling system with acoustical tile panels shall be installed. It will be a 2' x 2' revealed pattern on an exposed 2' x 4' grid with 2' x 4' ceiling tile (tegular-revealed) panels. The ceiling panels and grid to be white. All panels shall have a noise reduction coefficient (NRC) of not less than **.65** in accordance with ASTM C-423.
   c. **Restrooms:** Ceiling to be **⅝"** drywall, taped and sanded, with a Level 5 finish.
4. **Walls:**
   a. **Demising Walls, Janitorial and Mechanical Rooms:** Walls separating government leased premises from adjacent tenants and the interior walls enclosing janitorial / mechanical facilities will be ***<u>erected from floor to building understructure</u>***. It shall be constructed with **3-⅝"** metal studs, 16" o.c., **⅝"** Type "X" drywall, taped and sanded, with a Level 5 finish below finished ceiling line.
      1. **Demising Wall - Option #1:** Steel *chain link* or *expanded metal mesh* fence may be substituted for drywall wall sections above the finished ceiling line.
      2. **Demising Wall - Option #2:** Open, **3-⅝"**, 25ga. (minimum) studding, 6" o.c., reinforced horizontally @ 24" o.c. maybe used without chain link fence or drywall installation above finished ceiling line.
   b. **Separation of Individual Military Service Office(s):** Walls separating collocated Military Service offices and common areas shall extend from finished floor to **<u>12" above finished ceiling</u>**. Construction shall be of **3-⅝"** metal studs 16" o.c. with **⅝"** drywall, taped and sanded, with a Level 5 finish. See paint schedule for wall colors.
   c. **Standard Interior Office Partitions:** Walls shall extend from finished floor **<u>to finished ceiling</u>**. Construction shall be of **3-⅝"** metal studs 16" o.c. with **⅝"** drywall, taped and sanded, with a Level 5 finish. See paint schedule for wall colors.
   d. **Soundproofing:** Sound attenuating batts with a minimum Sound Transmission Class (STC) of 45, when tested in accordance with ASTM E-336, <u>shall be inserted in all demising and internal walls</u>.
   e. **Porcelain Wainscot Wall Tile (Restroom):** Wall tiles shall be installed per ***ENCLOSURE #2***, ***<u>including ordering instructions</u>***, typical wainscot pattern, including tile, transitions, and grout color designations.
   f. **Fiberglass Wall Panels (Janitorial Closet):** Shall be installed to from floor to ceiling (full-wall-height) on all janitorial closet walls. Panels to be standard white, Class C, Fiberglass Reinforced Plastic (FRP). Panel performance to comply with ASTM E-84.
   g. **Accent Walls:** Will be as specified on the approved floor plan / AE drawing and as referenced on the specific Military Service paint-finish schedule. Wall mounted fixtures such as thermostats, wall switches, light sensors, emergency lighting etc., should be placed free and clear of all Military Service accent walls.

<u>PAINT SCHEDULE</u>

<u>General Painting Notes</u>:

- ***See GS paragraph G for requirements, inspect drywall finish prior to painting to ensure a Level 5 finish.***
- ***For individual Military Service requirements, see the specific Military Service Attachment-Paint Schedule.***

COMMON AREA & RESTROOMS PAINT SCHEDULE						
Mfr:	**Color Name:**	**Color #:**	**Product:**	**Coats:**	**Finish:**	**Area:**
Sherwin Williams	PRIMER	ProMar 200 White (see Note 1)	B28W02600	2	Latex: Acrylic Primer	All Walls / All Painted Trim
Sherwin Williams	Common Area & Restroom Walls Worldly Gray	SW 7043 Worldly Gray	B20W12651	2	Latex: Eg-Shel	Walls (Restroom & Common Areas)
Sherwin Williams	Common Areas & Restrooms Trim Worldly Gray	SW 7043 Worldly Gray	B31W2651	2	Latex: Semi-Gloss	Trim (Restroom & Common Areas)
Sherwin Williams	Common Area Chair Rail Mega Greige	SW 7031 Mega Greige	B31W2651	2	Latex: Semi-Gloss	Chair Rail (Common Areas)
Sherwin Williams	Standard Ceiling Finish White	Standard White Ceiling Finish	Standard	2	Latex: Eg-Shel	Ceiling (Restroom)
Note 1: ***ProMar 200 Primer to be tinted to match the applicable wall color for all walls, and all painted trim.***						
Note 2: ***For individual Military Service paint-finish schedule, see specific Military Service Attachment-Paint Schedule.***						
Note 3: **Chair Rail** to be: Mega Greige SW 7031.						
Note 4: **Restrooms** to be: Worldly Gray SW 7043.						
Note 5: **Drywall Ceilings** ***(where applicable)*** to be: Standard White Ceiling Finish.						
Note 6: If selected, contractor should request Sherwin Williams' colors as listed above for common areas. Formulas to these colors are available on Sherwin Williams' National Accounts Database.						

5. **Flooring -** General parameters: All floor areas will be of a common level, finished in a specified material and have a minimum live-load capacity of 50 pounds per square foot.
   a. **Porcelain Tiles:** See ***ENCLOSURE #2***, ***including ordering instructions***, for a typical floor tile pattern, including tile color / name, grout color / name, and tile transition designations. See specific Military Service Attachment for their requirement.
      1. **Entry Tiles for Separate or Shared Entrances (Lobby / Front / Rear Exterior Exits as necessary):** Porcelain tile with unpolished, non-slip surface shall be installed at the interior side of exterior / exit entrance doors for recruiting offices located in a 4-season climate zone. Military Service facility front entrance areas shall have tile to be centered on the width of the door opening plus a foot on each side, with a minimum of approximately 4' L x 5' W, see the approved floor plan / AE drawings where applicable.
      2. **Common Hallway / Corridor / Security Closets and Restroom Areas:** Porcelain tile with unpolished, non-slip surface shall be installed in the hallways, corridors, security closets, and restroom area floors.
   b. **Storage areas:** Vinyl Composition Tile (VCT) with base cove shall be installed in storage areas. Note: See specific Military Service Attachment for requirements.
   c. **Base Cove (for VCT & Carpet only):** Note: See specific Military Service Attachment for requirements.
   d. **Janitorial-Mechanical room(s):** Exposed concrete with non-slip floor sealer.
      Base Cove: Johnsonite / Tarkett (https://distributor.tarkett.com), Rubber; Color: #40, Black, 4" H.
   e. **Carpet Schedule by Military Service (Office, test room and related areas):** ***For individual Military Service requirements, see the specific Military Service Attachment's Carpet Schedule.***
6. **Windows:**
   a. **Exterior:** Windows shall be weather tight and if operable, shall be equipped with lock assemblies. Window unit(s) that cannot be secured must be replaced.
      1. **Existing Laminated Glass - IMPORTANT:** Lessor will confirm that all glass meets the following minimum requirements. A nominal ¼" thick laminated glass pane fabricated from two pieces of nominal ⅛" thick glass bonded together with a minimum 0.030" polyvinyl butyral (PVB) interlayer. If the window contains an insulating glass unit (IGU), the innermost lite must be the laminated glass noted above and the outer lite may be monolithic glass. If the Lessor is unable to provide written confirmation that the existing glass meets this requirement, then glass fragment retention film **must** be installed as indicated below. With written confirmation from the Lessor / contractor stating laminated glass is present (on **ALL** windows / doors that are on the perimeter of the Government's

leased premises, regardless of the window being to the outside air or a shared common space with other tenants) and meets the required standards above, fragment retention film is not required.

2. **Glass Fragment Retention Film: IMPORTANT:** Without written confirmation of laminated glass installed, all glass in exterior windows and doors shall have fragment retention film applied to the interior (room) side in accordance with manufacturer's instructions by a certified installer. Fragment retention film can be either optically clear or, if approved by Lessor, with a light gray tint or a reflective surface. Film shall be 3M Safety & Security Window Film, series type Ultra S800 or Ultra Prestige S50. Film may be substituted that meets or exceeds the specified films (along with manufacturer's structural silicone adhesive anchoring systems), with prior approval of COE. Film shall be attached to the interior frame on all four (4) sides using an anchoring system in accordance with the manufacturer's instructions. The anchoring system shall use the 3M Impact Protection Adhesive structural silicone adhesive. **Under NO circumstances are standard sealant or caulk compounds to be utilized for adhesive anchoring of the film**. Note: The structural silicone adhesive color shall complement existing framing system. The adhesive shall be applied only after the window has been masked with 1" blue "safe release tape" applied to both film and window frame to assure a clean, gasket-like appearance when tape is removed. For 'wooden window / door frame systems', an anchoring system need not be applied to glass fragment retention film edges (daylight application). If selected, for installation, government pricing-expedited delivery is available from; Window Film Depot, P.O.C. Jeff Franson, 866-933-3456; email: jeff@windowfilmdepot.com.
3. **Mini-Blinds:** NOT TO BE INSTALLED ON ANY EXTERIOR WINDOWS OR DOORS.
4. **Roller Shades:** See Para. G.9.a.1. (below).
5. **Perforated Window Wraps:** See Para. G.9.b.

b. **Interior:**

1. **Windows:** A 3'-0" H x 4'-0" W fixed, glass window set in metal frame shall be installed in interior walls of hallways and recruiter-in-charge office(s). Top of window frames to align with top of door frames. Note: Ganged windows along hallways are acceptable. These windows shall meet all safety code requirements and be equipped with mini-blinds that meet standards referenced below.
2. **Window Frames:** Interior window frames to match style and color of door frames (Timely manufactured steel Classic S-Series) with factory applied Alumatone finish (not painted). With ¼" tempered glass and ½" glass stop (TA-14 in Alumatone finish).
3. **Test Room(s):** *Except for the Marine Corps*, test rooms shall have an individual window(s) as indicated on the approved floor plan / AE drawing. Mini-blinds **are not** to be installed for these windows or doors.
4. **Mini-Blinds (interior windows / doors only, except test rooms):** All interior windows and glass doors (except test rooms) shall be equipped with mini-blinds having non-corroding mechanisms and synthetic tapes. Each window shall have its own individual mini-blind. Mini-blinds shall be Hunter Douglas Riviera Commercial Aluminum Horizontal Blinds (cordless), Color: Brushed Aluminum # G8-034, with 1" wide aluminum horizontal slat with beveled steel profile or approved equal. **Test and Interview room windows DO NOT have mini-blinds**. Note: To prevent swaying, mini-blinds that are installed on interior doors must be secured at the bottom of the door with metal clips.

7. **Doors:**

a. **Exterior – Main Entrance(s):** Lessor Shell Requirements / Exterior Door Health Survey: Exterior door openings to the Government controlled space shall be surveyed to ensure a healthy, weather tight and fully functional door unit (door, frame, glass, and hardware). Door opening / swing to be outswing only, fail secure with Grade 1 hardware and no mail slots allowed. Existing mail slots in exterior doors shall be removed. Survey / coordinate hardware requirements on existing doors / frames to be re-used. Clean, repair or replace as necessary - advise COE representative if existing door / hardware needs to be replaced. All exterior door hinge pins (exposed to the outside exterior of the office premises) will be secured / replaced with concealed / non-removable pins.

1. **Fragment Retention Film**: The Lessor will confirm and provide written confirmation that the existing glass in exterior glass doors meets the minimum laminated glass requirements identified in Para. G.6.a above or fragment retention film must be installed.
2. **Secondary Egress Doors:** Steel doors and frames are required unless building aesthetics / standards only allow glass / other door types.

b. **Interior Doors:** Shall be a flush panel solid core wood door with maple veneer and Grade 2 hardware or better.

1. **Frames / Glass / Finish:**
   - **i.** Interior door and window frames to be Timely manufactured steel Classic S-Series (445) frames with factory applied Alumatone finish (not painted).
   - **ii.** Door color to be stained MinWax, Red Chestnut #232 (on all sides) with two (2) coats of polyurethane matte finish to be applied to stained areas.
   - **iii.** Doors requiring a full length glass inset (low profile lite kit [24" x 60"] with ¼" tempered glass), shall color match the Timely manufactured steel frames (factory applied Alumatone color SC108) or brushed stainless steel finish.

c. **The following door opening hardware schedule and specifications shall apply:** A Certified Integrator / Installer per manufacturer is required for extended warranty periods and trouble-free installations for Aiphone, Hanwha (Certified Video Professional / Wisenet Certified Professional (WCP)), ASSA ABLOY, and most other listed equipment manufacturers.

Door Openings (Doors / Hardware) Schedule & Specifications

EXTERIOR:

Application:	Model / Skew #'s:	Description:	Size:	Finish:	Qty:	Set Codes:	Notes:
Primary Entrance Door Single Aluminum:	N/A	Building Standard w/Glass Door	1-¾" x 36" x 84"	Match Building Standard	N/A	E1, E2	Notes 1, 3 and 4
Primary Entrance Door Double Aluminum:	N/A	Building Standard w/Glass Door	1-¾" x 36" x 84" (Ea)	Match Building Standard	N/A	E8	Notes 1, 3 and 4
Secondary Egress Single Door(s):	N/A	Hollow Metal Core	1-¾" x 36" x 84"	See Paint Schedule	N/A	E3, E4	Notes 1, 3 and 4
Secondary Egress Double Door(s):	N/A	Hollow Metal Core	1-¾" x 36" x 84" (Ea)	See Paint Schedule	N/A	Similar to: E8, E9 or E10	Notes 1, 3 and 4 Adjust as needed.

INTERIOR:

Application:	Model / Skew #'s:	Description:	Size:	Finish:	Qty:	Set Codes:	Notes:
Military entrance / egress, commander's office, conference / multi-purpose room, test / interview	N/A	Wood Door w-Full Length Glass Inset	1-¾" x 36" x 80"	See Notes	N/A	I1, I2, I3, I4, and I5,	Notes 2, 3, and 4
General Door (service to internal common area, restroom, storage, janitorial, mechanical)	N/A	Wood Door	1-¾" x 36" x 80"	See Notes	N/A	I6, I8, I9, and I10	Notes 2, 3, and 4
Security Closet Door	N/A	Wood Door (Options): Solid ~ Louvered Inset ~ Pocket Door	1-¾" x 36" x 80"	See Notes	N/A	I7a, I7b, and I7c	Notes 2, 3, and 4

HARDWARE SET DESCRIPTIONS:

EXTERIOR:

Application:	Model / Skew #'s:	Description:	Size:	Finish:	Qty:	Set Codes:	Notes:
Single Aluminum Exterior Door	8801EL36-24	Adams Rite - Rim Exit Device	2-5/8" x 36"	Satin Aluminum	1	E1	⚡
	55-56-PE8504F NEL (at stiles less than 4.5") 55-56-PE8804F WEL (at stiles 4.5" or more)	Sargent – Rim Exit Device with Motorized Latch Retraction Nightlatch, key retracts latch.	Select model by verifying stile width. 36" wide Other widths available.	Satin Stainless Steel	1		⚡ PE80 for secondary egress w/ keypad
	A620-626	Yale – Cylinder Housing & Interchangeable Core (7-Pin)	N/A	Satin Chrome	1		
	MS4043-00-130	Adams Rite - Guard Ring	N/A	Clear Anodized	1		
	4612-1	Adams Rite - Power Transfer	N/A	Chrome	1		⚡
	BF158-630	Rockwood - Door Pull	1" x 12"	Satin SS	1		Match Existing building color
	3531-689	Yale - Automatic Door Closer	2-1/8" x 12"	Aluminum	1		
	BLP-210 (outswing)	DON-JO - Security Latch Guard (Anti-Pry Plate)	10" x 3.25" (outswing)	Match Existing	1		Conform to existing door configuration (e.g., offset, door handle, etc.)
	DPS-M-GY	Securitron - Door Position Switch (Magnetic)	¾"	Gray	1		⚡ Only required for shared / common area egress doors.
	IXG-DM7-HIDA	Aiphone - IXG System Door-Entrance Station	13-11/16" H x 7-3/16" W x 2" D	SS	1		⚡ (with mounting bracket)
	SBX-IXGDM7	Aiphone - Surface Mount Box, Includes Rain Hood	13-3/4" H x 7-5/16" W x 3-1/16" D	SS	1		
	DK-26	Securitron - Keypad with CPU Board/Controller	1-1/2" W x 7" H x 7/8" D	SS	1		⚡ **Optional** Rear Egress Only w/o Public Access
	FPO250-C8D8E2	LSP - Power Supply (hardwired on security board)	12" W x 14" H x 4.5" D	Black	1		⚡ 8 Door / 8 Lock, 20A, 12VDC
Single Aluminum Exterior Door **Emergency Egress ONLY**. No door pull. * - NOT the standard Secondary Egress.	PE8510F (at stiles less than 4.5") PE8810F (at stiles 4.5" or more)	Sargent – Rim Exit Device Exit only no outside trim or key override	Select model by verifying stile width. 36" wide Other widths available.	Satin Stainless Steel	1	E2	If exterior inswing door consult with COE.
	A620-626	Yale – Cylinder Housing & Interchangeable Core	N/A	Satin Chrome	1		
	MS4043-00-130	Adams Rite - Guard Ring	N/A	Clear Anodized	1		
	3531-689	Yale - Automatic Door Closer	2-1/8" x 12"	Aluminum	1		
	BLP-210 (outswing)	DON-JO - Security Latch Guard (Anti-Pry Plate)	10" x 3.25" (outswing)	Match Existing	1		Conform to existing door configuration (e.g., offset, door handle, etc.)
	DPS-M-GY	Securitron - Door Position Switch (Magnetic)	¾"	Gray	1		⚡ Only required for shared / common area egress doors.

Application:	Model / Skew #'s:	Description:	Size:	Finish:	Qty:	Set Codes:	Notes:
Single Hollow Metal/Wood Exterior Door	8701EL36-24	Adams Rite - Rim Exit Device	2-5/8" x 36"	Satin Aluminum	1	E3	⚡ 3701-36 for fire rated doors
	55-56-PE8504F NEL (at stiles less than 4.5") 55-56-PE8804F WEL (at stiles 4.5" or more)	Sargent – Rim Exit Device with Motorized Latch Retraction Nightlatch, key retracts latch. Include shim kits as needed for glass moldings.	Select model by verifying stile width. 36" wide Other widths available.	Satin Stainless Steel	1		⚡ PE80 for secondary egress w/ keypad
	A620-626	Yale – Cylinder Housing & Interchangeable Core	N/A	Satin Chrome	1		
	MS4043-00-130	Adams Rite - Guard Ring	N/A	Clear Anodized	1		
	4612-1	Adams Rite - Power Transfer	N/A	Chrome	1		⚡
	BF158-630	Rockwood - Door Pull	1" x 12"	Satin SS	1		Match Existing building color
	3531-689	Yale - Automatic Door Closer	2-1/8" x 12"	Aluminum	1		
	BLP-210 (outswing)	DON-JO - Security Latch Guard (Anti-Pry Plate)	10" x 3.25" (outswing)	Match Existing	1		Conform to existing door configuration (e.g., offset, door handle, etc.)
	DD01-180ULSN	NuK3y - Peephole (220º Viewing Angle)	1-1/16" x 1-3/8" ~ 2-1/4"	Satin Nickel	1		9/16" Hole Install height @ **5'-0" AFF**
	DPS-M-GY	Securitron - Door Position Switch **METAL** (Magnetic)	¾"	Gray	1		⚡ DPS-W-GY for Wood Doors. Only required for shared / common area egress doors.
	IXG-DM7-HIDA	Aiphone - IXG System Door-Entrance Station	13-11/16" H x 7-3/16" W x 2" D	SS	1		⚡ (with mounting bracket)
	SBX-IXGDM7	Aiphone - Surface Mount Box, Includes Rain Hood	13-3/4" H x 7-5/16" W x 3-1/16" D	SS	1		
	DK-26	Securitron - Keypad with CPU Board/Controller	1-1/2" W x 7" H x 7/8" D	SS	1		⚡ **Optional** Rear Egress Only w/o Public Access
	FPO250-C8D8E2	LSP - Power Supply (hardwired on security board)	12" W x 14" H x 4.5" D	Black	1		⚡ 8 Door / 8 Lock, 20A, 12VDC
Single Hollow Metal/Wood Exterior Door **Emergency Egress ONLY**. No door pull. * - NOT the standard Secondary Egress.	PE8510F (at stiles less than 4.5") PE8810F (at stiles 4.5" or more)	Sargent – Rim Exit Device Exit only no outside trim or key override. Include shim kits as needed for glass moldings.	Select model by verifying stile width. 36" wide Other widths available	Satin Aluminum	1	E4	
	A620-626	Yale – Cylinder Housing & Interchangeable Core	N/A	Satin Chrome	1		
	MS4043-00-130	Adams Rite - Guard Ring	N/A	Clear Anodized	1		
	3531-689	Yale - Automatic Door Closer	2-1/8" x 12"	Aluminum	1		
	DD01-180ULSN	NuK3y - Peephole (220º Viewing Angle)	1-1/16" x 1-3/8" ~ 2-1/4"	Satin Nickel	1		9/16" Hole Install height @ **5'-0" AFF**
	BLP-210 (outswing)	DON-JO - Security Latch Guard (Anti-Pry Plate)	10" x 3.25" (outswing)	Match Existing	1		Conform to existing door configuration (e.g., offset, door handle, etc.)
	DPS-M-GY	Securitron - Door Position Switch **METAL** (Magnetic)	¾"	Gray	1		⚡ DPS-W-GY for Wood Doors Only required for shared / common area egress doors.

Application:	Model / Skew #'s:	Description:	Size:	Finish:	Qty:	Set Codes:	Notes:
Double Aluminum Exterior Door (both active leaf's, one electrified)	8801EL36-24	Adams Rite - Rim Exit Device	2-5/8" x 36"	Satin Aluminum	1	E8	⚡
	8801-36	Adams Rite - Rim Exit Device	2-5/8" x 36"	Satin Aluminum	1		
	55-56-PE8504F NEL x PE8510F x L980A mullion (at stiles less than 4.5") 55-56-PE8804F WEL x PE8810F x L980S mullion (at stiles 4.5" or more)	Sargent – Pair of Rim Exit Device with Motorized Latch Retraction one leaf. Nightlatch, key retracts latch at active leaf. Exit only inactive. Keyed removable mullion.	Select model by verifying stile width. 36" wide Other widths available	Satin Stainless Steel	1		⚡ PE80 for secondary egress w/ keypad
	A620-626	Yale – Cylinder Housing & Interchangeable Core	N/A	Satin Chrome	2		
	4612-1	Adams Rite - Power Transfer	N/A	Chrome	1		⚡
	BF158-630	Rockwood - Door Pull	1" x 12"	Satin SS	1		On electrified door. Match Existing building color
	3531-689	Yale - Automatic Door Closer	2-1/8" x 12"	Aluminum	2		
	MS4043-00-130	Adams Rite - Guard Ring	N/A	Clear Anodized	2		
	3890-10-628	Adams Rite – Removable Mullion for 8800 Series Exit Devices	N/A	Clear Anodized	1		
	DPS-M-GY	Securitron - Door Position Switch (Magnetic)	¾"	Gray	2		⚡ Only required for shared / common area egress doors.
	IXG-DM7-HIDA	Aiphone - IXG System Door-Entrance Station	13-11/16" H x 7-3/16" W x 2" D	SS	1		⚡ (with mounting bracket)
	SBX-IXGDM7	Aiphone - Surface Mount Box, Includes Rain Hood	13-3/4" H x 7-5/16" W x 3-1/16" D	SS	1		
	DK-26	Securitron - Keypad with CPU Board/Controller	1-1/2" W x 7" H x 7/8" D	SS	1		⚡ **Optional** Rear Egress Only w/o Public Access
	FPO250-C8D8E2	LSP - Power Supply (hardwired on security board)	12" W x 14" H x 4.5" D	Black	1		⚡ 8 Door / 8 Lock, 20A, 12VDC

INTERIOR:

Application:	Model / Skew #'s:	Description:	Size:	Finish:	Qty:	Set Codes:	Notes:
Service Interior Entrance Doors (w/in Gov't controlled leased premises):	Varies	Solid Core Flush Wood Door & Full Length Glass Inset	1-¾" x 36" x 80"	See Notes	Ea	I1	Notes 2, 3 and 4
	Classic S-Series (Timely Code 445)	Timely Manufactured Frame with pre-drilled holes & silencers	36" x 80"	Alumatone	Ea		Door & window frames to match
	TA2714-USA-US26D	McKinney - Hinges	4-1/2" x 4-1/2"	Satin Chrome	4		
	B-TB-4607LN-626	Yale – Entry Lever Cylinder Lockset	N/A	Satin Chrome	1		B-UB-4607LN-626 if local code requires return
	A600-626	Yale – SFIC Core (7-Pin)	N/A	Satin Chrome	1		
	K1050-CSK-630	Rockwood – Kick Plate	10"	Satin SS	2		
	Riviera-G8-034	Hunter Douglas Riviera Commercial Aluminum Horizontal Blinds (cordless)	1"	Brushed Aluminum	1		Note 2
	Varies	Solid Core Flush Wood Door	1-¾" x 36" x 80"	See Notes	Ea	I2	

Service Interior Secondary Egress Door (w/in Gov't controlled leased premises) – if applicable:	Classic S-Series (Timely Code 445)	Timely Manufactured Frame with pre-drilled holes & silencers	36" x 80"	Alumatone	Ea		Door & window frames to match
	TA2714-USA-US26D	McKinney - Hinges	4-1/2" x 4-1/2"	Satin Chrome	4		
	B-TB-4607LN-626	Yale – Entry Lever Cylinder Lockset	N/A	Satin Chrome	1		B-UB-4607LN-626 if local code requires return
	A600-626	Yale – SFIC Core (7-Pin)	N/A	Satin Chrome	1		
	K1050-CSK-630	Rockwood – Kick Plate	10"	Satin SS	2		
	DD01-180ULSN	NuK3y - Peephole (220º Viewing Angle)	1-1/16" x 1-3/8" ~ 2-1/4"	Satin Nickel	1		9/16" Hole Install height @ **5'-0" AFF**
Application:	**Model / Skew #'s:**	**Description:**	**Size:**	**Finish:**	**Qty:**	**Set Codes:**	**Notes:**
Station Commander Office Door(s):	Varies	Solid Core Flush Wood Door & Full Length Glass Inset	1-¾" x 36" x 80"	See Notes	Ea	I3	
	Classic S-Series (Timely Code 445)	Timely Manufactured Frame with pre-drilled holes & silencers	36" x 80"	Alumatone	Ea		Door & window frames to match
	TA2714-USA-US26D	McKinney - Hinges	4-1/2" x 4-1/2"	Satin Chrome	4		
	B-TB-4607LN-626	Yale – Entry Lever Cylinder Lockset	N/A	Satin Chrome	1		B-UB-4607LN-626 if local code requires return
	A600-626	Yale – SFIC Core (7-Pin)	N/A	Satin Chrome	1		
Test & Interview Room Door:	Varies	Solid Core Flush Wood Door & Full Length Glass Inset	1-¾" x 36" x 80"	See Notes	Ea	I4	
	Classic S-Series (Timely Code 445)	Timely Manufactured Frame with pre-drilled holes & silencers	36" x 80"	Alumatone	Ea		Door & window frames to match
	TA2714-USA-US26D	McKinney - Hinges	4-1/2" x 4-1/2"	Satin Chrome	4		
	B-TB-4601LN-626	Yale – Passage Latch	N/A	Satin Chrome	1		B-UB-4601LN-626 if local code requires return
Multipurpose / Conference Room Door(s) – if applicable:	Varies	Solid Core Flush Wood Door	1-¾" x 36" x 80"	See Notes	Ea	I5	
	Classic S-Series (Timely Code 445)	Timely Manufactured Frame with pre-drilled holes & silencers	36" x 80"	Alumatone	Ea		Door & window frames to match
	TA2714-USA-US26D	McKinney - Hinges	4-1/2" x 4-1/2"	Satin Chrome	4		
	B-TB-4607LN-626	Yale – Entry Lever Cylinder Lockset	N/A	Satin Chrome	1		B-UB-4607LN-626 if local code requires return
	A600-626	Yale – SFIC Core (7-Pin)	N/A	Satin Chrome	1		
Storage Room Door:	Varies	Solid Core Flush Wood Door	1-¾" x 36" x 80"	See Notes	Ea	I6	
	Classic S-Series (Timely Code 445)	Timely Manufactured Frame with pre-drilled holes & silencers	36" x 80"	Alumatone	Ea		Door & window frames to match
	TA2714-USA-US26D	McKinney - Hinges	4-1/2" x 4-1/2"	Satin Chrome	4		
	B-TB-4607LN-626	Yale – Entry Lever Cylinder Lockset	N/A	Satin Chrome	1		B-UB-4607LN-626 if local code requires return
	A600-626	Yale – SFIC Core (7-Pin)	N/A	Satin Chrome	1		
Security Closet Door (Standard):	Varies	Solid Core Flush Wood Door	1-¾" x 36" x 80"	See Notes	Ea	I7a	Standard Door
	Classic S-Series (Timely Code 445)	Timely Manufactured Frame with pre-drilled holes & silencers	36" x 80"	Alumatone	Ea		Door & window frames to match
	TA2714-USA-US26D	McKinney - Hinges	4-1/2" x 4-1/2"	Satin Chrome	4		

	B-TB-4607LN-626	Yale – Entry Lever Cylinder Lockset	N/A	Satin Chrome	1		B-UB-4607LN-626 if local code requires return
	A600-626	Yale – SFIC Core (7-Pin)	N/A	Satin Chrome	1		

Application:	Model / Skew #'s:	Description:	Size:	Finish:	Qty:	Set Codes:	Notes:
Security Closet Door (Full Louvered Inset):	Varies	Solid Core Flush Wood Door & Full Length Louvered Inset	1-¾" x 36" x 80"	See Notes	Ea	I7b	Louvered Door (Option)
	Classic S-Series(Timely Code 445)	Timely Manufactured Frame with pre-drilled holes & silencers	36" x 80"	Alumatone	Ea		Door & window frames to match
	TA2714-USA-US26D	McKinney - Hinges	4-1/2" x 4-1/2"	Satin Chrome	4		
	B-TB-4607LN-626	Yale – Entry Lever Cylinder Lockset	N/A	Satin Chrome	1		B-UB-4607LN-626 if local code requires return
	A600-626	Yale – SFIC Core (7-Pin)	N/A	Satin Chrome	1		
	2701 R/PA- 689	Yale - Automatic Door Closer	2-1/8" x 12"	Aluminum	1		
Security Closet Door (Pocket):	Varies	Solid Core Flush Wood POCKET Door	1-¾" x 36" x 80"	See Notes	Ea	I7c	Required for Air Force HUB Offices
	PF28200A7280	Pemko - Pocket Door Hardware	N/A	N/A	1		2" x 4" Framing, With soft close / open
	PF134KIT	Pemko - Pocket Door Frame Kit	1-¾" x 36" x 80"	Chrome Plated	Ea		Kit for 1-3/4" doors within 2" x 4" Framing
	P-Series TA-23	Timely Pocket Trim Kit	N/A	Alumatone	Ea		
	XGT-243-PD9653A-S7-32D-RH or LH-TT07	Inox – PD96 Series Sliding, Self-Latching/Locking Mortise Entry Lock	N/A	Satin SS	1		Specify handing in order as RH or LH. If local code requires door handle return use XGT-244.
	A600-626	Yale – Interchangeable Core (7-Pin)	N/A	Chrome	1		
	N/A	Plywood Reinforcement	N/A	N/A	Ea		¾" plywood installed between pocket door studs for rigidity
Restroom Door(s):	Varies	Solid Core Flush Wood Door	1-¾" x 36" x 80"	See Notes	Ea	I8	
	Classic S-Series (Timely Code 445)	Timely Manufactured Frame with pre-drilled holes & silencers	36" x 80"	Alumatone	Ea		Door & window frames to match
	TA2714-USA-US26D	McKinney - Hinges	4-1/2" x 4-1/2"	Satin Chrome	4		
	B-TB-4602LN-626	Yale – Privacy / Bath Lever Cylinder Lockset	N/A	Satin Chrome	1		B-UB-4602LN-626 if local code requires return
	K1050-CSK-630	Rockwood – Kick Plate	10"	Satin SS	2		
Janitorial Closet Door:	Varies	Solid Core Flush Wood Door	1-¾" x 36" x 80"	See Notes	Ea	I9	
	Classic S-Series (Timely Code 445)	Timely Manufactured Frame with pre-drilled holes & silencers	36" x 80"	Alumatone	Ea		Door & window frames to match
	TA2714-USA-US26D	McKinney - Hinges	4-1/2" x 4-1/2"	Satin Chrome	4		
	B-TB-4607LN-626	Yale – Entry Lever Cylinder Lockset	N/A	Satin Chrome	1		B-UB-4607LN-626 if local code requires return
	A600-626	Yale – SFIC Core (7-Pin)	N/A	Satin Chrome	1		
	K1050-CSK-630	Rockwood – Kick Plate	10"	Satin SS	2		
	Varies	Solid Core Flush Wood Door	1-¾" x 36" x 80"	See Notes	Ea	I10	

Mechanical Room Door(s) - if applicable	Classic S-Series (Timely Code 445)	Timely Manufactured Frame with pre-drilled holes & silencers	36" x 80"	Alumatone	Ea		Door & window frames to match
	TA2714-USA-US26D	McKinney - Hinges	4-1/2" x 4-1/2"	Satin Chrome	4		
	B-TB-4607LN-626	Yale – Entry Lever Cylinder Lockset	N/A	Satin Chrome	1		B-UB-4607LN-626 if local code requires return
	A600-626	Yale – SFIC Core (7-Pin)	N/A	Satin Chrome	1		

NOTES & ADDITIONAL REQUIREMENTS FOR EXTERIOR & INTERIOR DOORS & HARDWARE:

1) **Exterior Egress Doors:**
   - **a.** Lessor Shell Requirements / Exterior Door Health Survey: Exterior door openings to the Government controlled space shall be surveyed to ensure a healthy, weather tight and fully functional door unit (door, frame, glass, and hardware). Door opening / swing to be outswing only, fail secure with Grade 1 hardware and no mail slots allowed. Existing mail slots in exterior doors shall be removed. Survey / coordinate hardware requirements on existing doors / frames to be re-used. Clean, repair or replace as necessary - advise COE representative if existing door / hardware needs to be replaced.
   - **b.** Door release time range: Default of 5-10 seconds for all electrified doors / key pads (IXG, DK-26).
   - **c.** Hinge pins for exterior doors to be concealed / non-removable (existing to remain if meets requirements).
   - **d.** DON-JO Door Strengtheners: **www.don-jo.com** (door / hardware specific **as needed for long term proper door usage** (connectivity of video intercom entry control (EC) system components), As determined by EC system contractor (e.g. - wrap around plate; inactive door wrap around strike prep; hinge side wrap around reinforcement; mortise lock wrap around; door reinforcer [deadbolts & key-in-knob locks]).
   - **e.** See paragraph G.9.ii: Hunter Douglas – Fixed Panel Shade (absolutely no mini-blinds on **exterior** doors).
   - **f.** See paragraph G.6. & G.7: 3M – Fragment Retention Film (required for ALL glass in doors and windows on the perimeter of Government controlled leased premises).
   - **g.** Additional door types (non-standard / double doors / all glass Herculite doors) confirm with COE (located in Appendix C).
2) **Interior Doors:**
   - **a.** To be flush panel solid core wood door, maple veneer, stained with MinWax Red Chestnut #232 (all sides); with two (2) coats of polyurethane matte finish applied to stained areas.
   - **b.** Metal Frames (for doors & windows): Interior door and window frames to be Timely manufactured steel frames with factory applied Alumatone aluminum / silver finish (not painted). For doors with a full length tempered glass inset (24" x 60"), finish to match the Timely frames "Alumatone" aluminum / silver finish metal frame. See paragraph G.6. & G.7 for full details.
   - **c.** Grade 2 hardware or better required. Specifications are for no return handles. If required by local code, door handles with a return may be substituted.
   - **d.** Doors to include a Rockwood (403-626 satin chrome) convex rubber door stop/bumper.
   - **e.** Security Closet ONLY Options:
     1. Flush panel wood finished door.
     2. Flush panel wood finished door with full length "louvered" inset – if increased Security Closet ventilation is required.
     3. Flush panel wood finished pocket door – may be installed to minimize space requirements (no swing taking up space).
   - **f.** Mini-Blinds: **Interior** doors & windows to have mini-blinds, except for Test / Interview rooms. Must be secured at the bottom of doors with metal clips.
3) **Certified Integrators / Installers (warranty):**
   - **a.** Aiphone - **https://www.aiphone.com/kbtopic/ix-series-integrations-hanwha**
   - **b.** Hanwha Vision STEP Partner - **https://hanwhavisionamerica.com/partner-portal/**
   - **c.** ASSA ABLOY (Rockwood, Securitron, Accentra, AdamsRite, and Pemko components) - **https://www.assaabloydss.com/en/support/installation-and-service-partners/certified-integrators**
4) **Keying or Re-Keying:** ***Before delivery and acceptance of the premises, all previous existing exterior door-locks shall be re-keyed***. The Lessor will be responsible for coordinating with the COE on the number of new keys required to be furnished to each Military Service. **EACH** individual Military Service office shall be separately keyed. **Note:** Both front and rear exterior exit doors for each Military Service should be same-keyed. Keys to be minimized / same-keyed for each Military Services primary and secondary egress doors, interior common area doors, security closet and each Military Service specific interior doors (excluding Station Commanders Offices). Station Commanders Offices shall be separately keyed. If fire department Knox Box is required, a key must be provided. See also paragraph A.4 regarding the number of recruiters needing keys.
5) **Acronym Legend:** **a**. SS = **Stainless Steel** **b**. EA = **Each** **c.** ⚡ = **Electrified component**.

G. Architectural Finishes-Fixtures-Supplies ~ Continued:

8. Restroom Fixtures, Accessories and Miscellaneous: Shall contain the following:

a. Faucet(s) to be a hardwired touchless, finish to be stainless steel (SS).
b. Toilet flush valves to be a hardwired touchless, finish (SS).
c. Urinal flush valves to be a hardwired touchless, finish (SS).
d. Foam soap dispenser to be a **manual**, wall mounted - finish (SS).
e. Mirror (above sink) with shelf – finish (SS).
f. Dual-roll toilet paper dispenser – finish (SS).
g. Commercial grade, stand alone, waste receptacle – finish (SS).
h. Commercial grade, hardwired wall mounted, touchless hand-dryer – finish (BSS). Hand-dryer to be equal to or better than Xlerator Model # XL-SB.
i. Urinal screen and/or toilet partition panels – finish (SS).
j. Sanitary napkin waste receptacle, wall mounted (Unisex / Women's restrooms) – finish (SS).
k. Coat hooks: inside face of each water closet stall door and mounted on back of restrooms entrance door – finish (SS).
l. Exhaust fan; 100cfm minimum or as required by code; sound level <2.0 sones.
m. GFI electrical outlet adjacent to mirror / sink.
n. Soft close toilet seat – Kohler Stronghold Quiet-Close Model #29177-GC-0 or equivalent.
o. If existing, restrooms to be updated with all appropriate paint, tile, fixtures, etc.

9. Miscellaneous:

a. Exterior Windows / Doors:

1. Roller Shades: ALL exterior windows shall have roller shades installed. WHEN INSTALLED, SHADES SHALL NOT ALLOW FOR ANY VISUAL GAPS.

i. Roller Shades (windows only): The Lessor will coordinate with the COE as to whether single roller shades are required. Single or Dual shades to be Hunter Douglas Architectural, Contract Roller Shade: Model #RB500 or equivalent. Fascia & End Cap finishes to be "anodized aluminum". These shades will not require military logos. To ensure a uniform appearance, all window shades will be motorized, with an appropriate electric wall keypad / switch control(s) for multiple shades, as identified on the floor plan / AE drawing **(installed at the front and rear of each Military Service facility)**. Each switch / keypad to be labeled. **NOTE: BATTERY OPERATED KEYPADS ARE NOT ALLOWED**. Roller Shade couplers will be used to minimize the number of motors and electrical drop(s) required (up to 300" in length and/or 6 roller shades). **All electrical power to be hardwired within conduit inside walls.** Shades shall NOT be installed inside the window frame (in order to connect multiple roller shades together with a single motor). Motor to be, Sonesse Ultra model # 50 RA with a sound level equivalent to an office conversation. Installation shall be as per manufacturer's written instructions ~ to include all necessary blocking and structural supports. Shades to include the required number of Individual Group Control (IGC) 4N1 motor controls (mounted above window, within ceiling, near front door when possible) with a HARDWIRED DecoFlex dry contact keypad / switch to be located at rear of space, by storage room door (as identified on floor plan / AE drawing). Shades will have a lifetime warranty and pass the NFPA 701 Small Scale test. If window(s) cannot be equipped with roller shades, either because of their unique shape and/or the inability to install the shade correctly, then only with expressed prior approval of the COE, a fixed panel shade shall be applied in accordance with fixed panel specifications below. If already installed, existing glass block requires no window covering. For wiring diagrams, see ***ENCLOSURES #3 and #4***.

- **Single Roller Shades (windows only):** Single privacy shade will be installed when the exterior perforated window wrap IS INSTALLED / WILL be applied to the exterior windows (Lessor to coordinate with the COE). See Para G.9.b. for Perforated Window Wrap guidelines. Privacy shade fabric shall equal Hunter Douglas SheerWeave 7100 P12 Oyster. If the 7100 fabric is not available, the alternate fabric to be SheerWeave 7400 Cotton.
- **Dual Roller Shades (windows only):** Dual Roller shades will be installed when an exterior perforated window wrap IS NOT or WILL NOT be applied to the exterior windows. Shades to have both 'Sheer' and 'Privacy' fabrics. The 'Sheer Shade' shall be

of a fabric equal to Hunter Douglas E Screen 3% White / White to be closest to the window. The 'Privacy Shade' shall be fabric equal to Hunter Douglas SheerWeave 7100 P12 Oyster. If the 7100 fabric is not available, the alternate fabric to be SheerWeave 7400 Cotton. Note: If a dual shade application is required, it may be necessary to install two individual shades if existing window conditions do not allow enough room to accommodate a dual shade bracket.

ii. **Fixed Panel Shades:** All exterior glass entrance doors and COE identified adjacent windows shall have a fixed panel shade installed on the interior side of the glass. This fixed panel shade shall include:

- Fixed panel shades to be Hunter Douglas Contract Shade: Model #RB500 or equivalent.
- Shade shall be a sheer fabric equal to Hunter Douglas E Screen 3% White / White.
- Fixed panel shall have a thread reinforced welded pocket.
- Attachment anchoring system to be clear anodized aluminum rods, mounted with fixed rod mount in a silver finish using # 8 stainless screws and be affixed to the door frame.
- Shade shall eliminate all light gaps with a minimum of **½"** overlap and NOT have excess material (preventing sagging / bowing when installed).
- Door(s) shall receive two separate top and bottom panels. The top panel to cover all exposed glass above the door handle. The bottom panel to cover all exposed glass below the door handle. If no door handle exists, two separate panel shades are also to be installed for stability.
- Any sidelight or transom windows adjacent to door(s) too narrow to receive roller shade(s) or unable to be effectively covered by specified roller shade(s) shall receive a single fixed panel shade as described above. Mounting hardware can be recessed inside the window mullion or on the front face of the window mullion.
- Installation shall be as per manufacturer's written instructions.
- See ***ENCLOSURE #5*** for typical pictures and installation drawings for the fixed panel shades. This enclosure includes Hunter Douglas drawing specification number references which will ensure proper materials are ordered.

iii. If selected, for installation and government pricing-expedited delivery: Hunter Douglas Contract division; 1-800-417-3248; email: armycorpsorders@hunterdouglas.com. Installation video can be found at the following link: https://www.youtube.com/watch?v=DEWBwhFNIaI

b. **Perforated Window Wraps:** The application of perforated window wraps is dependent upon the type of facility, along with other requirements. COE representative / Military Service(s) shall have control over what graphic is applied, what position the graphic will be placed and on which windows. Lessor / contractor will coordinate with the COE representative. ALL perforated window wraps to incorporate into the overall graphic a "**Weapons Prohibited**" graphic (8.5" W x 11" H) centered vertically on the door directly next to the handle (see below example and Box.com for the graphic file).

1. **Stand-Alone OR Collocated with Separate Entrance Doors:** Install perforated window wrap with appropriate Military Service(s) graphic on the exterior of all storefront glass. **Perforated window wrap installations shall have 100% coverage of all exterior glass**, including common areas (see individual Military Service graphic requirements). The Graphic below is provided for example purposes **ONLY**. The COE Representative to provide the appropriate link for each Military Services graphic (all appropriate files to be downloaded by contractor for use). ALL perforated window wraps to incorporate into the overall graphic a "**Weapons Prohibited**" graphic (8.5" W x 11" H) centered vertically on the door directly next to the handle (see example and Box.com for the graphic file).

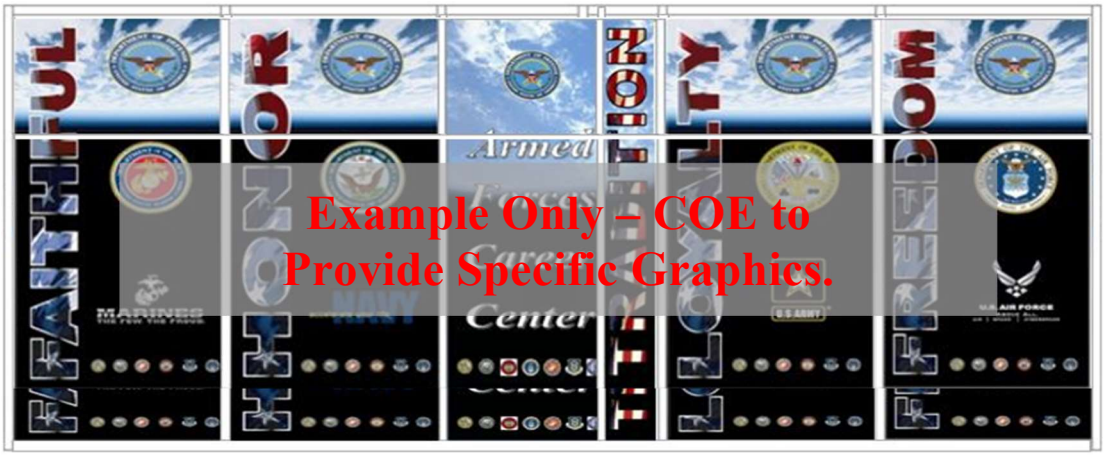

2. **Collocated with a Shared Entrance Door (JRFC Graphic):** When multiple Military Services are present and they share the same entrance door, a "JRFC Graphic" will be installed. **Perforated window wrap installations shall have 100% coverage of all exterior glass**, including common area windows (if applicable). If Military Service "exclusive" windows on the sides or rear of the premises (not front windows) are present, individual Military Service graphics can be applied to those windows (coordinate with the COE Representative). The JRFC Graphic image shown below is provided for reference purposes **ONLY**. This image will be included in a PDF "Style Guide" that the contractor **MUST** download with detailed instructions. The image needs to be **put together with specified materials and look as close to the below image as possible**. In the Style Guide, the black lines represent window / door mullions. ALL perforated window wraps to incorporate into the overall graphic a "**Weapons Prohibited**" graphic (8.5" W x 11" H) centered vertically on the door directly next to the handle (see example and Box.com for the graphic file). The COE representative will provide a link and folder name for the contractor to download ALL appropriate files necessary (36 in total) to create / install the JRFC Graphic:

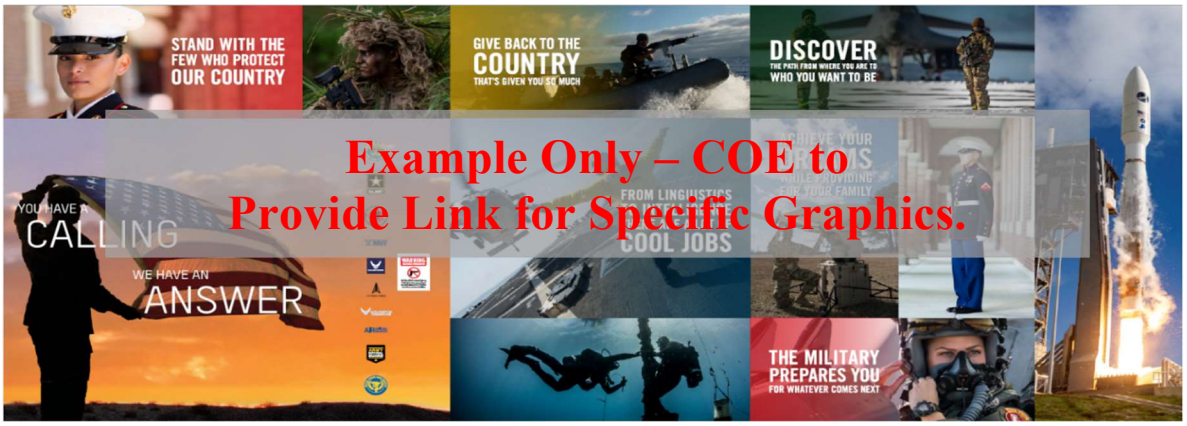

3. **The Lessor will provide all graphics examples and mockup elevations for COE approval, and when chosen, provide final proofs and storefront elevation renderings of the approved graphics**.
4. The approved graphic(s) shall meet the following standard(s) or equivalent on all storefront window wrap applications (including all manufacturer installation requirements MUST be followed, especially for temperatures, for the installation of all perforated exterior graphics):
   i. 3M, 8170 – P40 (40% perforated), 4-mil, opaque, cast vinyl film with a high gloss finish.
   ii. Window graphic film will have a visual obscurity density of 60 / 40. **Army to have an 80/20 visual obscurity density. See service specific "Attachment 1" for additional details.**
   iii. Apply 3M Scotchcal Optically Clear Gloss Overlaminate (8518) and shall be laminated prior to installation.
   iv. Apply 3M edge sealer tape 8914 at time of installation to all edges of the perforated film to prevent pealing.
5. The Lessor will coordinate with the COE representative regarding the correct graphic. The following are the types of graphics that might be installed at a location (as indicated in #1 and #2 above), and in rare cases both could be installed.
   i. Military Service Individual Graphics (Stand-alone OR Collocated with separate entrance doors).
   ii. JRFC Graphic (Collocated with shared entrance door for all Military Services).
6. **Note:** Only the COE representative will make the final decision on the approved graphics.

c. **Mail Delivery:** Exterior doors with existing mail slots shall be removed. Lessor will coordinate with COE and USPS on the appropriate mail delivery method. Delivery to be by external secured cluster box.

d. **Chair Rail:** Shall be installed on common area walls, excluding restrooms, and as referenced on the individual, Military Services' finish schedule and approved floor plan / AE drawing. Chair rail to be mounted at bottom edge, 30" AFF, with semi-gloss paint finish. Profile to be Alexandria Molding: AMH 300 1-1 / 16" x 3", primed finger-jointed pine chair rail molding. **See specific Military Services' Attachments for their specific requirements**. **Note:** Example of designated chair rail shown below:

Chair Rail

e. **Shelving:** Layout / design of the shelf system shall be in accordance with the approved floor plan / AE drawing and verified by the COE before installation.
   1. **Storage Room Shelving:** Edsal (Model# ER772472W4 or ELR772472W) 24 in D x 77-84 in W x 72-84in H with 4-Tier adjustable steel utility shelves and sufficient floor or wall Anti-Tip anchors. Minimum 1,500 lbs support per shelf.

   2. **Janitorial Closet Shelving:** Shall have a shelf system with a minimum of three (3) 16" x 24" shelves, industrial grade, tight-wire-mesh shelves with support brackets affixed to wall studs, 16" o.c. Shelves shall be installed approximately 15" o.c. vertically, beginning 40" from floor and be capable of maintaining a structural integrity of 50 lbs / lf deadload.

f. **Desktop:**

1. **Test Room:** Where installed, desktop to be approximately 30" AFF x 24" D. When chair rail exists or will be installed, align top of desktop to bottom of chair rail. Electrical and data outlets are to be located and centered under desktop as indicated on the approved floor plan / AE drawings. Note: Grommets must be installed in the countertop to allow wire / cords to pass through (located against the wall, in the center of the desktop, directly above the electrical and data outlets). Desktop shall be adequately supported by under-desktop support braces to prevent future sagging. See specific Military Services' Attachment for requirements.

g. Pantry (Wet or Dry): See each Military Services attachment for details.

h. Security Closet: See paragraph K.1.

H. Signage:

1. **Exterior Signage:** If collocated, Brand Identity Sign will read **"Armed Forces Career Center"** and shall comply with local building code requirements and Lessor specific guidelines. The sign shall have LED technology and be fabricated and installed in accordance with the referenced graphic and design standards. Channel letter returns and raceway color to match building façade. Note: The COE will provide an EPS format file to the Lessor for sign fabrication. *The sign will be the maximum size allowed by code.*

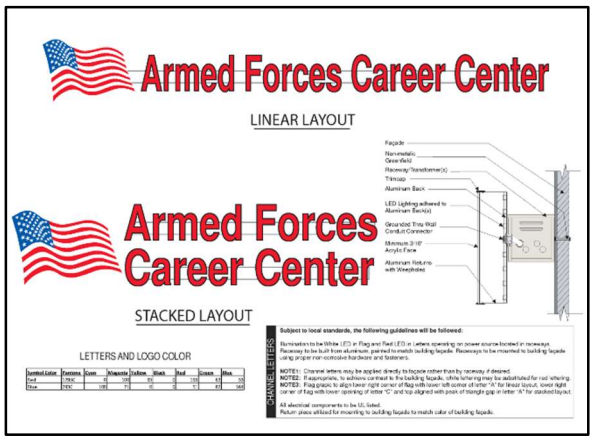

Note: If appropriate, to achieve contrast to the building façade, white lettering may be substituted for red lettering.

a. Collocated offices (side by side entrances) are to receive the "Armed Forces Career Center" signage.

b. Signage requirements for single, stand-alone recruiting office, see specific Military Service Attachment-Exterior Signage.

c. If applicable, separate small individual exterior cabinet / box signs shall be provided above each individual Military Service entrance (on the façade or perpendicular to the door, hung from the covered walkway ceiling). These are in addition to the **"Armed Forces Career Center"** sign. These internally illuminated LED small entrance cabinet / box signs (or style approved by Lessor) shall identify, by single name, the appropriate Military Service at its respective entrance. Unless otherwise requested, the signs shall have a black, Lexan face with white Helvetica Condensed lettering.

d. All signs will function by use of a 'dusk to dawn' light sensor. The Lessor shall ensure proper sign erection and electrical installation.

e. Marquee / Monument / Pylon Sign (road side - as applicable): For a stand-alone Military Service, sign panel shall reflect the residing Military Service. If collocated, sign panel will read "Armed Forces Career Center". If panel size permits, the American flag, should be utilized as an identifying feature. See potential example below (Lessor to coordinate with COE on specific design):

MONUMENT/PYLON SIGN

f. Additional security signage is listed in Paragraph K.4 "security applications" below.

g. Perforated Window Wrap: See paragraph G.9.b. for full details.

2. **Interior Signage:**
   a. Hallway blade sign(s): Size not to exceed 5" x 30" and be constructed of a satin black panel with surface-applied, silver, self-adhesive, vinyl lettering identifying the applicable Military Service. Mounting height to be a minimum 84" AFF from the bottom edge of sign.
   b. Restroom signs shall be provided and constructed of a durable material and affixed to the door of each restroom and will meet all ADA / ABAAS requirements for placement to include minimum mounting height, braille lettering standards and sign graphics.
   c. Window / wall graphics: See specific Military Service Attachment for requirements.

I. Parking:

1. The Lessor will identify all designated government parking spaces on an approved parking / site plan. Parking / site plan is to be framed and permanently affixed to each Military Services secondary egress door.
2. See paragraph K.4 below for CCTV parking signage.

J. Landscaping: The COE along with the Lessor shall approve any proposed contractor installed landscaping at facilities where the Government is the sole occupant.

K. Security Applications: The Government controlled space (primary, rear egress doors, and GOV Parking) shall be secured with a Video Intercom Entry Control (EC) and CCTV / NVR systems. **If existing, the current building system(s) must meet or exceed all the referenced specifications below, to be acceptable**. A Certified Integrator / Installer per manufacturer is required for extended warranty periods and trouble-free installations for Aiphone, Hanwha (Certified Video Professional / Wisenet Certified Professional (WCP)), ASSA ABLOY, and most other listed equipment manufacturers.

REQUIRED BY LAW: For all supplied communication requirements and electronic security applications, the Lessor (or their contractors) are PROHIBITED (2019 N.D.A.A. law) from providing to the Government any such equipment or services as a substantial or essential component, or as critical technology as part of any system. These **PROHIBITED** security / telecommunications products are from any of the following source entities, any subsidiary or affiliate of such source entities: 1) The People's Republic of China; 2) Huawei Technologies Company; 3) ZTE Corporation; 4) Hytera Communications Corporation, Hangzhou Hikvision Digital Technology Company; 5) or Dahua Technology Company. **Lessor (or contractors) must certify the equipment is not from any of these sources and provide written confirmation to the COE Representative prior to installation**. **Lessor (or contractors) must certify the equipment is not from any of these sources and provide written confirmation to the COE Representative prior to installation**. **Upon acceptance of the premises, the Lessor or Contractor must re-certify in writing what equipment has been installed, and that all components comply with the 2019 N.D.A.A. requirements**.

All supplied / installed components / equipment to be from authorized dealers, and shall be equal to or exceed the performance of the models referenced below.

1. **Security Closet:** Location as shown on the **approved floor plan / AE drawings** (shall **NOT** be located within restrooms or janitorial closet), and shall meet the following requirements.
   a. Security Closet Requirements:
      1. One room that combines all the equipment and fixtures to support ALL the Military Services communications and security needs, and must be accessible to each Military Service.
      2. Approximate size will vary depending on the number of Military Services present: A minimum of **6' W x 6' D** for up to 2 Military Services (or up to 10' W x 6' D for additional Military Services), with adequate ventilation / air flow to dissipate heat, per hardware manufacturer' recommendations. See HVAC specifications in paragraph B.2.
      3. See appropriate paragraphs B, D, and G for specific mechanical, electrical, communications, architectural finishes specifications.
   b. **Security Board:** Within the Security Closet, Lessor to wall mount a ¾" thick, 4'-0" W x 8'-0" H fire-retardant treated plywood backboard, at **2'-0" AFF** (top edge of backboard to be trimmed 6" below drop ceiling if necessary). The security board location must have 36" of front clearance to facilitate access and have an overall layout as shown on ***ENCLOSURE #1c***. See paragraph D for electrical requirements.

1. **Tripp Lite Model # SRW12UDP (<u>dedicated for the EC and CCTV systems</u>):** A 12U Security Cabinet (with lockable door), to be aligned and mounted directly on the right side of the Security Board. Top of cabinet to be at 48" AFF and be used for the NVR keyboard / mouse shelf. Horizontal and Vertical Spacing between Communications cabinet(s) to be 12" on all sides.
   - **i.** Security Cabinet model MUST accommodate quadplex outlet for the NVR, PoE+ switch, and associated equipment as necessary.
   - **ii.** Three (3) keys to the Security Cabinet must be provided to the COE Representative for **<u>EACH</u>** Military Service (see A.4). Only Facility Managers / ATO's will have these keys. All Military Services personnel to have read / download / export access (via USB extension wire) when an event occurs. <u>The system must be secured (locked) at all times</u>.
2. **PoE+ Switch(s) [Model #'s listed in the table(s) under paragraph K]:** One (1) primary **NETGEAR** 48 port PoE+ switch (in unmanaged mode) at a minimum for CCTV and EC hardware. As required for additional PoE+ ports, an optional / secondary **NETGEAR** 24 (or 48) port PoE+ or PoE++ switch (in unmanaged mode) may be needed.
3. **Where applicable, for distant and non-contiguous Military Service offices / spaces, a remote PoE+ switch, PoE+ Extender, conduit, and wiring maybe required.**

c. Communications / Commo Board: Each Military Service will have their designated Communications Cabinet with lock and internal flush mount quadplex for power. See paragraph D. & E. for requirements.

d. Low Voltage / Communications (See CCTV/NVR System – (Example Layouts Pages 1 thru 4), *ENCLOSURE #1a, 1b, 1c and 1d* and *ENCLOSURE #6a, 6b, 6c and 6d* for a diagram of requirements / layout).

e. Outlets / Wiring: These voice / data port outlets will be vertically aligned and installed within 2" horizontally on each office space electrical outlet, so the tops of both outlets measure to the same height AFF, or as identified on the approved floor plan. Required 1" conduit terminating 12" above finished wall height. See Paragraph A.1. Permits.

1. Security and Communications Cabinet wiring requirements:
   - **i.** Each Military Service will have straight-through BLUE data CAT 6 wires from their Communications Cabinet into their office space.
   - **ii.** Ceiling access points (BLUE data CAT 6 wires) to be covered with a blank standard white faceplate.
   - **iii.** The Security Cabinet will have yellow data CAT 6 wires into each Military Service's office space for the Aiphone desk-tenant stations.
   - **iv.** Aiphone Desk-Tenant Station Outlets: Routed from the Security Cabinet PoE+ Switch(s) to designated wall location. These straight through CAT 6 yellow wire(s) labeled on both ends with a female RJ45 cover plate at the wall location.
   - **v.** With an 8' yellow patch wire from wall outlet to the desk-tenant station.
   - **vi.** Each labeled wall plate (destination end) shall be equipped with a three (3) port female RJ45 plate. All data port jacks, and straight-through CAT 6 wire (T568B) will be color coordinated and labeled with identification number at both ends. Two BLUE data port jacks & BLUE wires will be routed to the Commo Board and one yellow data port jack & yellow wire routed to the Security Board PoE+ Switch(s).
   - **vii.** The RJ45 connector can then be connected to a modem, router, switch, adaptive security appliance, etc., which may be installed by the Military Service's telecom provider.
   - **viii.** All Communications faceplates will be color coordinated with the electrical faceplates. See each Military Service Attachment for specific color requirements for faceplates.
   - **ix.** **<u>Required wiring / data port jack colors</u>:** All data port jacks and straight-through (T568B) CAT 6 wiring shall be color coordinated and labeled. All wiring shall be contained in appropriate conduit in walls and the ceiling interstitial / plenum space to be arranged in a tight compact arrangement / appearance in raceways.
     - Military Services Comms (Voice & Data):
       - **a.** Two (2) CAT 6 wiring & data port jacks color = BLUE.
     - EC Systems (paragraph K.3):
       - **a.** CAT 6 wiring & data port jack color = YELLOW.
     - CCTV / NVR systems (paragraph K.4) & Mounted TV / monitors (paragraph D.4):
       - **a.** CAT 6 wiring & data port jack color = RED.

- Roller Shades (single or dual):
  a. CAT 6 wiring = GRAY.

x. All wiring for Commo / Security Board Cabinets components shall be color coordinated, labeled with Military Service and Port Identification numbers at both ends, have a minimum of three (3) feet of slack, contained in a horizontal or vertical organizer / enclosure (similar to Legrand Model #SHMC2RU) and in an organized manner. All wires shall be labeled referencing port numbers and Military Service as follows:

- Air Force = "USAF".
- Air Force Reserve = "AFR".
- Army = "USA".
- Navy = "USN".
- Marine Corps = "USMC".
- Air National Guard = "ANG".
- Army National Guard = "ARNG".

2. Conduit / Raceways:

i. Conduit size to be capable of handling all data wires and access needs for ALL the Military Services (minimum 1" Demarc conduit for two Military Services at a location).

ii. Voice and data wall / ceiling / floor outlet box conduit runs to the commo board shall terminate 12" above finished wall height. Note: See paragraphs D. & K.

iii. Wiring above ceiling (interstitial / plenum space) shall be contained in a raceway, if not installed in conduit.

2. Security Hardware / Application Requirements (EC & CCTV/NVR Systems): Contractor will advise the COE Representative on any unique site / office requirement(s) which will require any modifications to these specified security components.

a. Off network / offline Hardware.

b. <u>Certified Integrators / Installers (warranty)</u>:

1. Aiphone - https://www.aiphone.com/kbtopic/ix-series-integrations-hanwha

2. Hanwha Vision STEP Partner - https://hanwhavisionamerica.com/partner-portal/

3. ASSA ABLOY (Rockwood, Securitron, Accentra, AdamsRite, and Pemko components) - https://www.assaabloydss.com/en/support/installation-and-service-partners/certified-integrators

c. EC and CCTV / NVR systems to be installed at the same time as they are integrated. Aiphone: IXG support tool file and IXG site specific configuration file to be loaded on the NVR (operating system drive).

d. NVR Computer Bios / Auto Start: Contractor to set / confirm NVR system BIOS settings are set to reboot automatically on power loss with MS Windows Auto Login (**NO** login password). Bios instructions are as follows:

1. Power On the NVR and press "DEL" or "F1" or "F2" or "F10" to enter BIOS (CMOS) setup utility (the way to enter into BIOS Settings depends on the computer board manufacturer).

2. Inside BIOS menu, look under the following menus to find for a setting named "Restore on AC/Power Loss" or "AC Power Recovery" or "After Power Loss", "Advanced" or "ACPI" or "Power Management Setup".

3. Note: The "Restore on AC/Power Loss" setting can be found under different places inside BIOS setup according to computer manufacturer.

4. Set the "Restore on AC/Power Loss" setting to "Power On".

5. Save and exit from BIOS settings.

e. Static IP Address Schedule: Manually set / confirmed by contractor.

1. Network PoE+ Switch(s) = 192.168.1.1-25 range.

2. Aiphone = 192.168.1.100-199 range – pre-set by Aiphone programming file.

3. CCTV / NVR = 192.168.1.200-255 range.

f. User IDs, Passwords and Door Access Codes: <u>Contractor to coordinate with the COE Representative for setting / integrating user IDs, passwords, and temporary door access codes, including controlled distribution. Contractor to ONLY assist the Military Services facility managers / ATO's with programming the final door access codes</u>.

1. Both the Aiphone IXG and Hanwha CCTV/NVR systems each require two (2) user / login levels each:

i. Aiphone IXG Support Tool:
   - Administrator for installer (Recruiters will not have access).
   - Property Manager for facility managers / ATOs (Recruiters will not have access).

ii. Hanwha / Wisenet Device Manager (CCTV): With these predefined user roles.
   - Owner for installer / facility managers / ATOs (Recruiters will not have access).
   - Viewer for onsite Recruiters / personnel.

iii. **No MS Windows login passwords. Windows Auto Login only.**

2. **System User IDs & Passwords (EC, CCTV/NVR/Decoder, PoE+ Switch):** User IDs / passwords shall be reset from defaults and set / integrated to match / align with each other. Admin and Owner user login level(s) & passwords to be set / integrated to match / align with each login level for all systems. **Local Personnel / Recruiters will only have access to the Wisenet "Viewer" user.**
3. **Door Access Codes with Controlled Distribution:** Contractor to program **two (2) temporary and unique access codes for each Military Service present.** The EC door-entrance station(s) (e.g. – A4611), and optional Securitron DK-26 individual keypad(s) codes to match #'s (e.g. – 4611) if both units are present. Two (2) separate and unique access codes are necessary for each Military Service.

g. **Camera & Door-Entrance Station Tools (Torx Tool):** To be stored in a clear sleeve inside the Security cabinet at the Security Board.

h. **System Documentation for CCTV/NVR Setup & License Tracking by Contractor** (activated licenses for all cameras, EC door-entrance station cameras, etc.):
1. One copy of the system(s) hardware documentation / manuals / login details, and camera licenses are to be stored in a clear sleeve (along with the door-entrance station / camera tool (Torx tool) inside the Security cabinet at the Security Board.
2. **Save the following files on the NVR (operating system drive):**

i. Screen shots of all license keys and #'s **(email second copy to the COE representative)**.

ii. Create Wisenet project file with current date.

iii. Run Wisenet camera / encoder report "ALL" **(email second copy to the COE representative)**.

iv. Create camera config backup file.

i. **Printed Exporting Video Instructions:** Provide "how to" instructions on exporting video footage from NVR, via USB extension wire located next to keyboard. Printed instructions to be placed in clear plastic sleeve and mounted above NVR monitor on Security Board.

j. **System Training:**
1. A Training event will be scheduled and coordinated with the COE Representative for all Military Services / personnel (see paragraph A.4. for recruiter numbers). Installer(s) will submit to the COE a legible, dated roster with the trainer's contact information, each Trainee's name/rank, along with systems covered.
2. Minimum of a 1-hour training session MUST be provided as part of the installation by the contractor to ALL Military Services where the system(s) is installed.
3. **On-site training to use "temporary" door access codes with Military Service personnel. Temporary access codes to be deleted / reprogrammed by Service Facility Managers / ATO's after training is accomplished**.
4. The training will cover minimum items:

i. EC System:
   - Individual Service access codes with controlled distribution to the Facility Manager / ATO.
   - System Features and operation of door-entrance station(s), keypads, desk-tenant stations.
   - RJ45 port and wire colors.
   - How to disconnect and reconnect desk-tenant stations.
   - Basic troubleshooting options / methods.
   - Ensure door release time range is set to 5-10 seconds for electrified doors / keypads.

ii. CCTV/NVR/Decoder with monitor displays:
   - Review camera placements and system features / settings.
   - Adjust each camera and Military Branch display for optimal egress / camera views.
   - What to do if the CCTV system shuts down, or display monitors stop displaying.
   - Demonstrate automatic restart / reboot NVR and display monitors in each office.

- Discuss and provide location of printed "how to" instructions on exporting video footage from NVR.

iii. Facility Managers / ATO's: When present, detailed training for required (names / emails previously given by COE representative):

- Individual system software (Aiphone, Wisenet) instructional demo for logging in.
- Demonstrate features and operation on each system present.
- How to add/remove recruiter(s) door access code(s) on Aiphone IXG Support Tool and DK-26 control board.
- How to retrieve door entrance history / access control data from Aiphone IXG Support Tool.
- How to disconnect/reconnect desk-tenant stations.
- Demonstrate automatic reboot / restart on EACH System, basic trouble shooting options.
- How to search / retrieve / export data video from NVR.
- What to do if the CCTV system shuts down, or display monitors stop displaying.

3. Video Intercom Entry Control (EC) System (*Aiphone IXG Series*):

A surface mounted door-entrance station (or keypad) shall be installed at the EXTERIOR PRIMARY-ENTRANCE and SECONDARY EGRESS doors to the military recruiting station as identified on the approved floor plan / AE drawings. Contractor will contact Aiphone and advise the COE before bid submittal of any unique site / office layout requirements which will impact their bid proposal. A Certified Integrator / Installer per manufacturer is required for extended warranty periods and trouble-free installations for Aiphone, Hanwha (Certified Video Professional / Wisenet Certified Professional (WCP)), ASSA ABLOY, and most other listed equipment manufacturers.

a. The EC system components should include the following items in the table below - as applicable (may differ based on the office layout / approved floor plan / AE drawings):

VIDEO INTERCOM ENTRY CONTROL (EC) SYSTEM COMPONENTS TABLE				
Application:	**Model / Skew #'s:**	**Description:**	**Qty:**	**Notes:**
Primary Entrance and/or Secondary Egress Doors	IXG-DM7-HIDA	Aiphone - IXG System Door-Entrance Station (with mounting bracket)	Ea	See Note 1, 2, 3, 4, 5.
Door-Entrance Station Mount	SBX-IXGDM7	Aiphone - Surface Mount Box, Includes Rain Hood	Ea	
Secondary Egress Doors (when no public access)	DK-26 SS	Securitron - Keypad with CPU Board/Controller	Ea	**Optional** Rear Egress Only See Note 4, 11
Each Military Service Space	IXG-2C7	Aiphone - Desk-Tenant Station	2+	See Note 1, 6
Each Military Service Space	MCW-S/B	Aiphone - Desk-Tenant Station – Stand	Ea	Per Desk-Tenant Station
Security Board	IXG-MAA	Aiphone - Network Door Release Relay Adaptor	1	Selective door release (allows Military Services to release specific doors)
	IXG-MK	Aiphone - Guard Station (includes flush mount kit)	1	See Note 12
	FPO250-C8D8E2	LSP - Power Supply (hardwired on security board)	1	8 Door / 8 Lock, 20A, 12VDC
Primary Entrance and/or Secondary Egress Doors	DPS-M-GY	Securitron - Door Position Switch (Magnetic)	Ea	Use DPS-W-GY for Wood Doors. Only required for shared / common area egress doors.
Security Board (in Security Cabinet)	GS752TPP-300NAS	NETGEAR – 48 Port **Primary** PoE+ Switch	Ea	48 Port (expandable with another 24 or 48 port switch)
Security Board (in Security Cabinet)	GS524UP-100NAS	NETGEAR – 24 Port **Optional / Secondary** PoE++ Switch	Ea	24 Port PoE++ Switch (See Note 5)

VIDEO INTERCOM ENTRY CONTROL (EC) NOTES:

1) **REQUIRED FOR CONTRACTORS:**
   a. **Contractor MUST complete questionnaire form for Aiphone custom program configuration file, which will be provided to the contractor for each office via email.**
   b. Programming design questionnaire forms & information to be completed at: **https://www.aiphone.com/support/technical-support/aiphone-programming-questionnaire**
2) See **https://www.aiphone.com/products/ixg-series** for IXG specifics and **recruitingcenters@aiphone.com** for installation details / questions at recruiting centers.
3) **Certified Integrators / Installers (warranty):**
   a. Aiphone - **https://www.aiphone.com/kbtopic/ix-series-integrations-hanwha**
   b. Hanwha Vision STEP Partner - **https://hanwhavisionamerica.com/partner-portal/**
   c. ASSA ABLOY (Rockwood, Securitron, Accentra, AdamsRite, and Pemko components) - **https://www.assaabloydss.com/en/support/installation-and-service-partners/certified-integrators**
4) Door release time range: Default of 5-10 seconds for all electrified doors / key pads (IXG, DK-26).
5) Door-entrance station cameras to be connected to the CCTV system **and shown on service specific open area television only.** These cameras and desk-tenant stations require a PoE+ Switch connection. **A license is needed to record door entrance station camera. Either recordability or viewability with be an option but not both.** If more than 48 ports (or PoE++ ports) are required, add on the optional / secondary PoE+ Switch.
6) **Door-entrance station mounting: If possible, mount door-entrance station on the side of the mullion flush to the exterior window. Purpose would be to try to limit the ability for the entrance station from being pulled off of the storefront**.
7) Desk-tenant stations to be installed in each Military Service facility (minimum of 2, maximum of 8) for each Military Service recruiter identified in paragraph A.4. **See Air Force Attachment "4a" for their desk-station requirements. Optional wall mounted desk-tenant s**tations should be placed free and clear of all Military Service accent walls (as identified on **approved floor plan / AE drawings**). Wall Outlet (yellow data port jack) to desk-tenant station shall include an eight (8) foot yellow straight-through CAT 6 patch wire. In rare cases (as directed by a COE representative or on the approved floor plan / AE drawings) a wall mount for desk-tenant stations may be necessary (wall mount model = IXG-FMK-2C7).
8) See paragraph G.7 for Door Hardware Schedule & release components.
9) All stranded low voltage wire (exit device, keypad, and door position switch) will be 18 AWG stranded wire with label / tag at each end for easy identification and troubleshooting. See ***ENCLOSURE #6a, 6b, 6c, and 6d*** for EC example components, wiring and layout diagrams.
10) See paragraph K. for PoE+ Switch & LSP Power supply requirements (hardwired on security board).
11) See communications paragraph E and ***ENCLOSURE #1a, 1b, 1c and 1d*** for locations and colors of data port jacks and CAT 6 wires.
12) No Public Access Secondary Doors: A secondary egress door that only Recruiting personnel use to enter the station. Typically, the public or potential recruits do not access thru this door. The "No public access doors" only requires the Securitron DK-26 Keypad with controller (vs the Aiphone door-entrance station). **If the secondary egress is just an emergency only egress where no parties typically than neither the DK-26 or Aiphone door-station will be needed.**
13) Door position switches to activate **shared egress door(s)** chime(s). Primary shared egress doors shall have a single-tone (e.g. - "ding"), and secondary shared egress door(s) shall have two-tones (e.g. - "ding-dong").

4. **Closed Circuit Television System (CCTV) with Network Video Recording (NVR):** Installation of system and its components shall be in conformance with the **attached CCTV System Example Layouts**, U.S. industry standards, manufacturers' recommendations, and site necessitated requirements.
   a. Installed in the Security Closet within a locking security cabinet with the **dedicated PoE+ Switch** as **an off network / offline system** (independent of any Military Services network / LAN system).
   b. Review CCTV / NVR system layouts below and ***ENCLOSURE #1c*** for additional installation requirements / instructions / components placement on Security Board. Note: One NVR per leased location.
   c. Each Military Service requires a live video feed from this system. If the non-contiguous spaces are too far apart (e.g. - wiring length or site specific restraints, etc.), a separate PoE+ Switch, wiring and conduit may be required to fully function and cover all Military Services. All non-contiguous space solutions to be coordinated with the COE Representative.

d. A Certified Integrator / Installer per manufacturer is required for extended warranty periods and trouble-free installations for Aiphone, Hanwha (Certified Video Professional / Wisenet Certified Professional (WCP)), ASSA ABLOY, and most other listed equipment manufacturers.

e. The CCTV system components should include the following items in the signage and table below - as applicable (may differ based on the specific recruiting office layout / approved floor plan / AE drawings):

CCTV System Components				
Application:	**Model / Skew #'s:**	**Description:**	**Qty:**	**Notes:**
Security Board: Installed inside Security Closet	SRW12UDP	Tripp Lite 12U – Locking Security Cabinet	1	See Note 1
	SMT-2431	Hanwha LED Color Monitor	1	See Note 2
	ML411B-B1	VideoSecu BJZ (swivel & tilt) Monitor Mounting Bracket	1	See Note 3
	ICCMSCMA81	Vertical Plastic Wire Duct	1	See Note 4
CCTV System: Installed inside Locking Security Cabinet	WRT-P-3104W-16TB	Hanwha Wisenet WAVE VMS (NVR) CCTV System	1	See Note 4
	CCTV System minimum requirements: 16TB raw, 170 Mbps recording B / W, (3) 3.5" HDD, (10th Gen) Intel Core i3, 16GB RAM, 256 GB SSD OS Drive, ***Windows 10 IoT Enterprise***, (2) DisplayPort output, (1) DisplayPort to HDMI adapter, Dual GbE NICs, Single 550W P.S., keyboard & mouse, with four (4) USB 3.2, two (2) USB 2.0, four (4) USB-C 3.2, and one (1) SD card ports. Wave VMS and Four (4) WAVE-PRO "Professional Licenses" Pre-Loaded.			
	WAVE-PRO-01	Wave VMS Recording License (1 pack)	Ea	See Note 4.g
	WAVE-PRO-04	Wave VMS Recording License (4 pack)	Ea	See Note 4.g
	WAVE-PRO-08	Wave VMS Recording License (8 pack)	Ea	See Note 4.g
	GS752TPP-300NAS	NETGEAR – 48 Port **Primary** PoE+ Switch	Ea	See Note 5
	GS524UP-100NAS	NETGEAR – 24 Port **Optional / Secondary** PoE++ Switch	Ea	See Note 5
	CAUSBAMF	6 foot USB extension wire	1	See Note 6
Interior Cameras: Primary & Secondary Egress Door(s) and Common Area Hallways	XND-C8083RV	Hanwha 6MP AI IR Vandal Dome Camera	Ea	See Note 7.a
	XNF-9013RV	Hanwha 12MP AI IR Vandal Dome Fisheye Camera	Ea	See Note 7.a
Exterior Cameras: Primary & Secondary Egress Door Paths	XNF-9013RV	Hanwha 12MP AI IR Vandal Dome Fisheye Camera	Ea	See Note 7.b
	Camera Connection Only	Aiphone: IXG-DM7-HIDA Door-Entrance Station	Ea	See Note 7.b
Exterior / Garage GOV Parking Cameras:	XNV-9083R	Hanwha 4K AI IR Vandal Dome Camera	Ea	See Note 7.c
	XNP-C8253R	Hanwha 6MP AI IR PTZ Dome Camera – PoE++	Ea	See Note 7.c
Camera Mounts: Where Applicable	Direct Mount	XND-C8083RV Camera Mount (backplate provided)	Ea	See Note 7.d (site specific need)
	SBP-400WMW	XNF-9013RV Camera Wall & Pole Mount (backplate provided)	Ea	See Note 7.d. SBP-156KMW (for a corner mount)
	SBP-400WMW	XNV-9083R Camera Wall & Pole Mount	Ea	See Note 7.d SBP-156KMW (for a corner mount)
	SBP-156WMW	XNP-C8253R PTZ Camera Wall & Pole Mount	Ea	See Note 7.d SBP-156KMW (for a corner mount)
CCTV Signage:	Custom	CCTV Security Sign (Color Printed on Aluminum)	Ea	See Note 8

Each Military Service Space:	DU8000	Samsung 55" 4K CCTV Monitor	Ea	See Note 9.a
	SPD-152	Hanwha PoE Network Video Decoder (custom screens)	Ea	See Note 9
	SLC3770LBK	Displays2Go, Monitor Mounting Pole	Ea	See Note 10

NOTES:

1) **Tripp Lite Model # SRW12UDP (dedicated for the EC and CCTV systems):** A 12U Security Cabinet (with lockable door), to be aligned and mounted directly on the right side of the Security Board. Top of cabinet to be at 48" AFF and be used for the NVR keyboard / mouse shelf (see ***ENCLOSURE #1c*** for details). Cabinet to include an interior quadplex outlet flush mounted (on the fire-retardant backboard). Each Military Service to be issued three (3) Security Cabinet keys for only Facility Managers / ATOs to retain.
2) **Hanwha 24" LED Color Monitor:** Full HD, 1080p (1920x1080), HDMI, VGA, 16:9 aspect ratio, VESA DPM Compatible for NVR System Monitoring. **https://hanwhavisionamerica.com/product/smt-2431/**
3) Swivel & tilt monitor bracket to be mounted directly above the CCTV keyboard / mouse on the Locking Security Cabinet.
4) **Security Hardware / Application Requirements (EC & CCTV / NVR Systems):** Contractor will advise the COE Representative on any unique site / office requirement(s) which will require any modifications to these specified security components.
   a. **Certified Integrators / Installers (warranty):**
      1. Aiphone - **https://www.aiphone.com/kbtopic/ix-series-integrations-hanwha**
      2. Hanwha Vision STEP Partner - **https://hanwhavisionamerica.com/partner-portal/**
      3. ASSA ABLOY (Rockwood, Securitron, Accentra, AdamsRite, and Pemko components) - **https://www.assaabloydss.com/en/support/installation-and-service-partners/certified-integrators**
   b. EC and CCTV / NVR systems to be installed at the same time as they are integrated. Aiphone: IXG support tool file and IXG site specific configuration file to be loaded on the NVR (operating system drive).
   c. Hardware Placement: See paragraph **E. Communications** and ***ENCLOSURE #1a, 1b,1c and 1d***.
      1. NVR Computer and PoE+ Switch(s) to be installed and powered within the Security Cabinet.
      2. To include professional component / wiring installation in an organized manner within wiring organizer wherever possible on the Security Board with labeling of source and destination ends of wiring.
   d. **NVR Computer Bios / Auto Start:** Contractor to set / confirm NVR system BIOS settings are set to reboot automatically on power loss with MS Windows Auto Login (**NO** login password). BIOS instructions are as follows:
      1. **Power On** the NVR and press "**DEL**" or "**F1**" or "**F2**" or "**F10**" to enter **BIOS** (CMOS) setup utility (the way to enter into **BIOS** Settings depends on the computer manufacturer).
      2. Inside **BIOS** menu, look under the following menus to find for a setting named "**Restore on AC/Power Loss**" or "**AC Power Recovery**" or "**After Power Loss**", "**Advanced**" or "**ACPI**" or "**Power Management Setup**".
      3. Note: The "**Restore on AC/Power Loss**" setting can be found under different places inside BIOS setup according to computer manufacturer.
      4. Set the "**Restore on AC/Power Loss**" setting to "**Power On**".
      5. **Save** and **exit** from BIOS settings.
   e. For more than 24 camera systems, upgrade the Hanwha NVR to the next model WRT-P-5204W 24TB.
   f. **Recording Standard:** Additional hard drive storage may be required to record: **all interior cameras on motion** recording and all exterior cameras on **24/7 recording** at **15 FPS** and with AI motion event, recording increased to **30 FPS** with full resolution on all cameras. Including all IXG door-entrance station cameras. Recording at H.264 for Aiphone IXG-DM7-HIDA and H.265 minimum for all other cameras. Minimum continuous recording storage capacity of **14 days** required. GOV Parking PTZ Cameras with AI person auto-tracking engaged / enabled.
   g. All Cameras require a WAVE-PRO License (Pro Recording License / Key) activated on the VMS for recording. Including the embedded camera in the Aiphone IXG-DM7-HIDA. (License are sold in 1 / 4

/ 8 / 16 / 32 packs.) An exported list of all license keys to be provided to the COE representative and printed / stored in the Security Cabinet.

h. All requirements found in paragraph K MUST be followed for setting up the CCTV system.

5) **NETGEAR 48 Port PoE+ Switch is required as the primary switch,** with additional 24 or 48 optional / secondary PoE++ Switches for PTZ cameras or expansion as needed. See paragraph K.1 for additional PoE+ Switch setup requirements.

6) **USB Extension Wire:** One (1) 6-foot USB 2.0 (male to female) extension wire plugged into the rear of the NVR and extending on top of the Security Cabinet by the monitor / keyboard. **https://srcomponents.com/products/cables/usb-cables/usb-cable-2-0-aa-male-to-female-6-ft.html**

7) **CCTV Cameras: No blind spots allowed.** See Note 4 above for recording standard settings. **https://hanwhavisionamerica.com/resources/tools/installation-simulator/**

a. Interior Cameras - https://www.hanwhasecurity.com/product/xnd-c8083rv/ or **https://www.hanwhasecurity.com/product/xnf-9013rv/:**

1. Exclusive / single egress door(s) - exiting Government controlled space (XND-C8083RV): One (1) plus camera(s) viewing the exterior entrance door area (viewing only the door entrance area).
2. Shared egress door(s) - exiting Government controlled space (Fisheye camera XNF-9013RV): One (1) plus camera(s) viewing the exterior entrance door area.
3. Common areas / hallways (Fisheye camera XNF-9013RV for full view / recording of space.): One (1) plus camera(s) to capture all interior common areas / hallways to include the security closet door. Cameras to have overlapping views with no blind spots.

b. Exterior Cameras - https://www.hanwhasecurity.com/product/xnf-9013rv/ fisheye camera**:**

1. Two (2) plus cameras to capture building perimeter at Primary entrance(s).
2. Two (2) plus cameras to capture building perimeter at Secondary Egress'.
3. Camera viewing angles shall provide "visual" paths for "safe egress" from the Government controlled space.
4. Mounting locations and applicable Exterior mounts shall be used to avoid viewing obstructions / blind spots.
5. Aiphone Door-Entrance Station Camera(s): Each Aiphone door-entrance station (IXG-DM7-HIDA) embedded camera(s) requires a Hanwha WAVE-PRO / Professional Recording License activated for recording. For all primary and secondary (if present) egress locations.

c. Exterior / Garage Government Vehicle (GOV) Parking Cameras - https://hanwhavisionamerica.com/product/xnv-9083r/ and **https://hanwhavisionamerica.com/product/xnp-c8253r/:**

1. Two (2) plus cameras dedicated for each GOV parking area with optical zoom to provide adequate coverage of all GOVs.
2. One (1) plus XNV-9083R camera(s) use the varifocal lens to zoom in and cover entire GOV parking area.
3. One (1) plus XNP-C8253R (PTZ) PoE++ camera(s) to cover entire GOV parking area with AI person auto tracking enabled.
4. PoE++ (IEEE802.3bt, Class6, Type3z) Injector included with XNP-C8253R package. All Injector(s) to be mounted on the Security Board.

d. General / Minimum Standards:

1. The appropriate quantity of cameras and Service viewing Monitors are to be installed (some specific sites may require more than quantities identified above).
2. Mounting of cameras to be at 12 feet above ground level, or as site requires.
3. Camera spacing not to exceed **40 feet** between camera placements.
4. Camera must have appropriate viewing angle and mounted with no obstructions / blind spots. Absolutely **NO BLIND SPOTS** allowed (exterior and interior common areas).
5. Camera images must provide 40PPF (pixel per foot) resolution at 25ft. **Stored images MUST have a high enough quality to provide convictable resolution / identification of intruders, vandals, thieves, etc. when necessary.**

8) **CCTV / Security Signage:** Install vandal resistant signage at the following locations:

a. Near exterior main entrance door(s) – Incorporated into the JRFC Graphic perforated window wraps in paragraph G.9.b.2. Or, installed over the top AFTER perforated window wraps are already installed.

b. Near exterior secondary exit door(s).

c. Minimum of one (1) CCTV / Security Warning parking sign at each GOV designated parking areas (typically strapped to light poles).
Signage Details:
1. Sign material to be aluminum and match the CCTV signage graphic below.
2. Minimum size of signage shall be equal to 8.5" H x 11" W.

9) **Military Service Space:** CCTV Display Monitors with Decoder:
a. **Samsung DU8000 55" UHD LED Monitor:** One (1) plus CCTV Display Monitors to be installed in each Military Service facility's open office area for dedicated CCTV viewing, via the SPD-152 PoE decoder. Centered in open office area to allow maximum visibility by recruiters, minimize glare or bright sunlight (which reduces visibility). **NOT to be mounted near exterior windows.** Note: Individual Military Service offices may require more than one monitor due to the large size / configuration of their area for adequate viewing.
b. **Hanwha SPD-152, PoE Network Video Decoder:** Decoder is a PoE device and can support two (2) monitors via HDMI cords (mounted on back of monitor).
c. **Customized Video Feed Requirements:** Installer to setup custom layout for each SPD-152 Video Decoder / Military Service office showing real time paths of egress, common areas, GOV's and building perimeter of Government controlled space including (see CCTV / NVR System (Example Layouts Page 3) for Military Service Monitor(s) SPD-152 basic layout and standards below:
1. Interior egress door cameras (Military Service specific).
2. Exterior egress paths.
3. Common areas / hallways.
4. GOV parking.

10) **Office Monitor Mounting Pole:** Displays2Go mounting pole (telescoping pole sized for specific installation location, screen size and weight requirements, with 360° rotation and 25° tilting capable bracket): **https://www.displays2go.com/P-29667/Swivel-Ceiling-TV-Mount-Flat-Inclined-Surfaces**
a. Installation: Pole mounted to understructure (through the drop ceiling tile) along with bracing / framing to support and minimal sway / movement. Location as identified on the approved floor plan / AE drawing.
b. Duplex outlet and communications outlet boxes (with CAT 6 Port) to be installed and concealed above ceiling tiles directly above monitor mounting location. Wiring to be routed thru / inside the mounting pole (power, ethernet wires, etc.).
c. Mounting height to be **8'-6" AFF** for top edge of Military Service monitor(s). Monitor mounting poles to be rated for appropriate size and weight. If an obstruction prevents the installation of the monitors at the specified mounting height, the tolerance for installation is + / - 6". Other mounting requirements:
1. Installation to include a "ceiling plate" or "ceiling mast trim ring" cover (to cover the hole for the pipe in the drop ceiling) and secured to the ceiling tile (may require additional support above the ceiling tile to prevent future ceiling tile sagging / damage). Color to match pole color.
2. Inside and outside wall corners to include the appropriate offset distance for tilting / rotating along all walls to allow maximum viewing adjustments.

CCTV / NVR System - (Example Layouts)

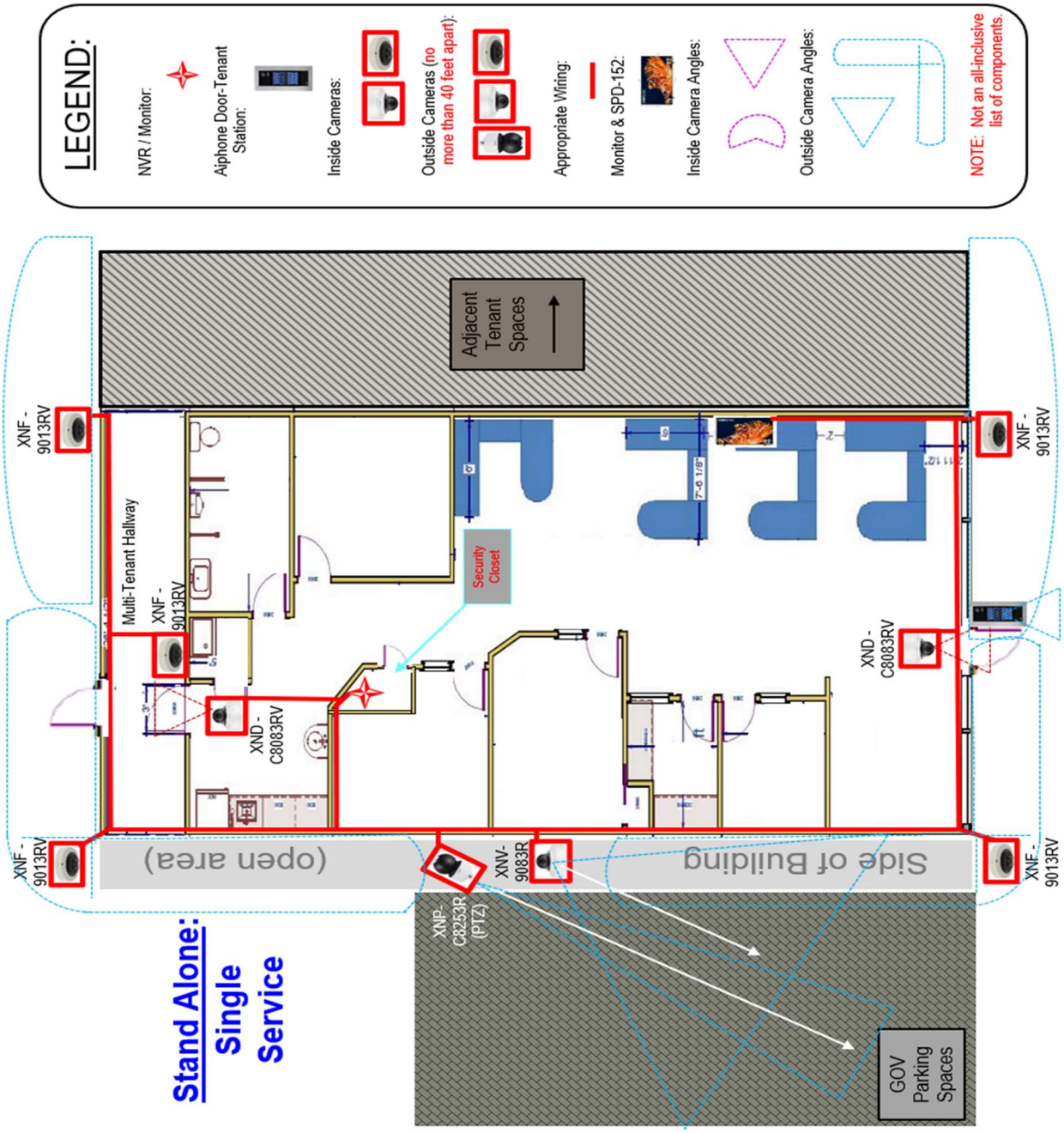

IMPORTANT: If examples conflict with the specifications, the specifications always take precedence. Coordinate with the COE representative.

U.S. ARMY CORPS OF ENGINEERS
Recruiting Facilities Program

CCTV / NVR System ~ Page 1 of 4

CCTV / NVR System - (Example Layouts)

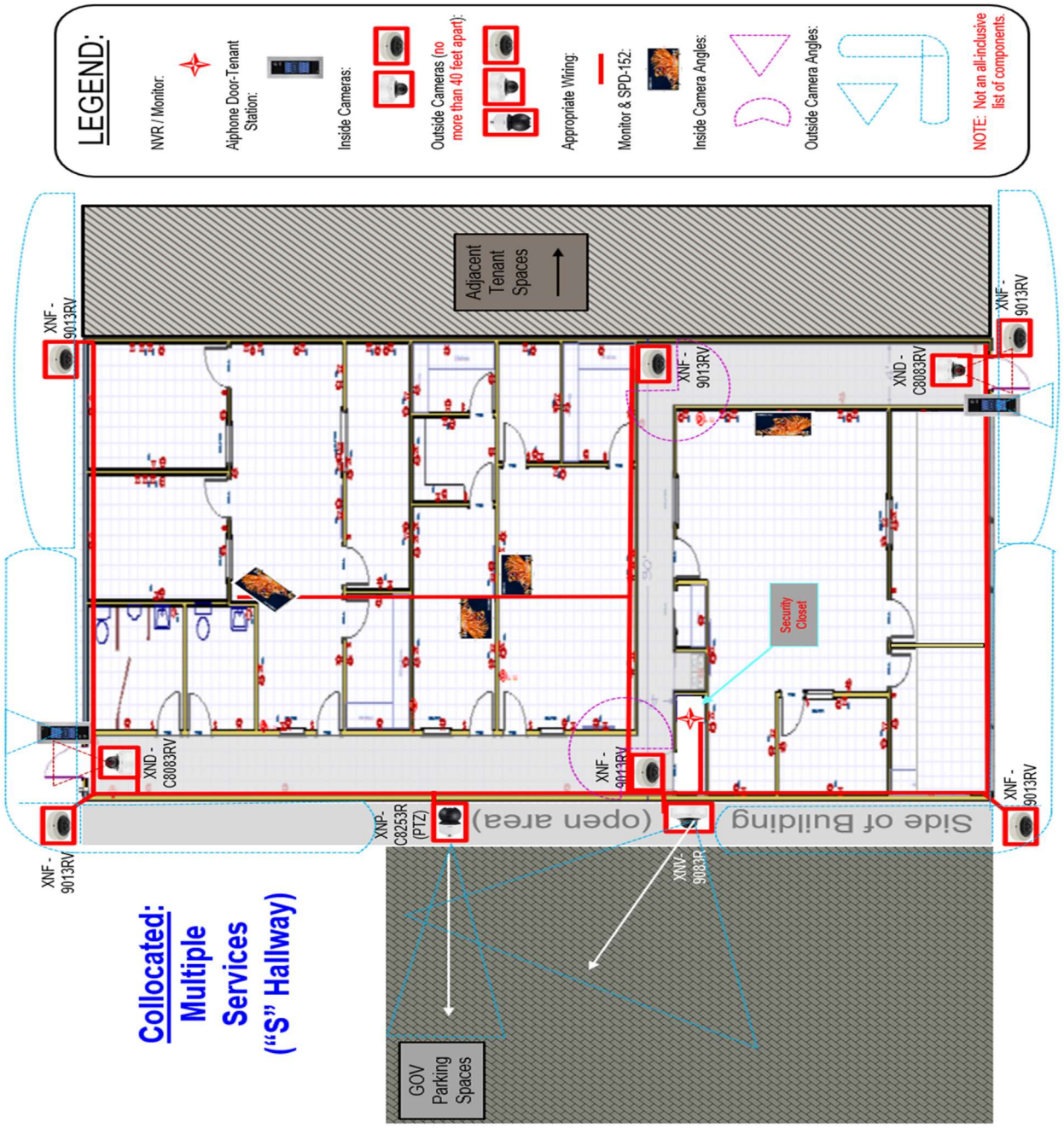

IMPORTANT: If examples conflict with the specifications, the specifications always take precedence. Coordinate with the COE representative.

U.S. ARMY CORPS OF ENGINEERS
Recruiting Facilities Program

CCTV / NVR System ~ Page 2 of 4

CCTV / NVR System - (Example Layouts)

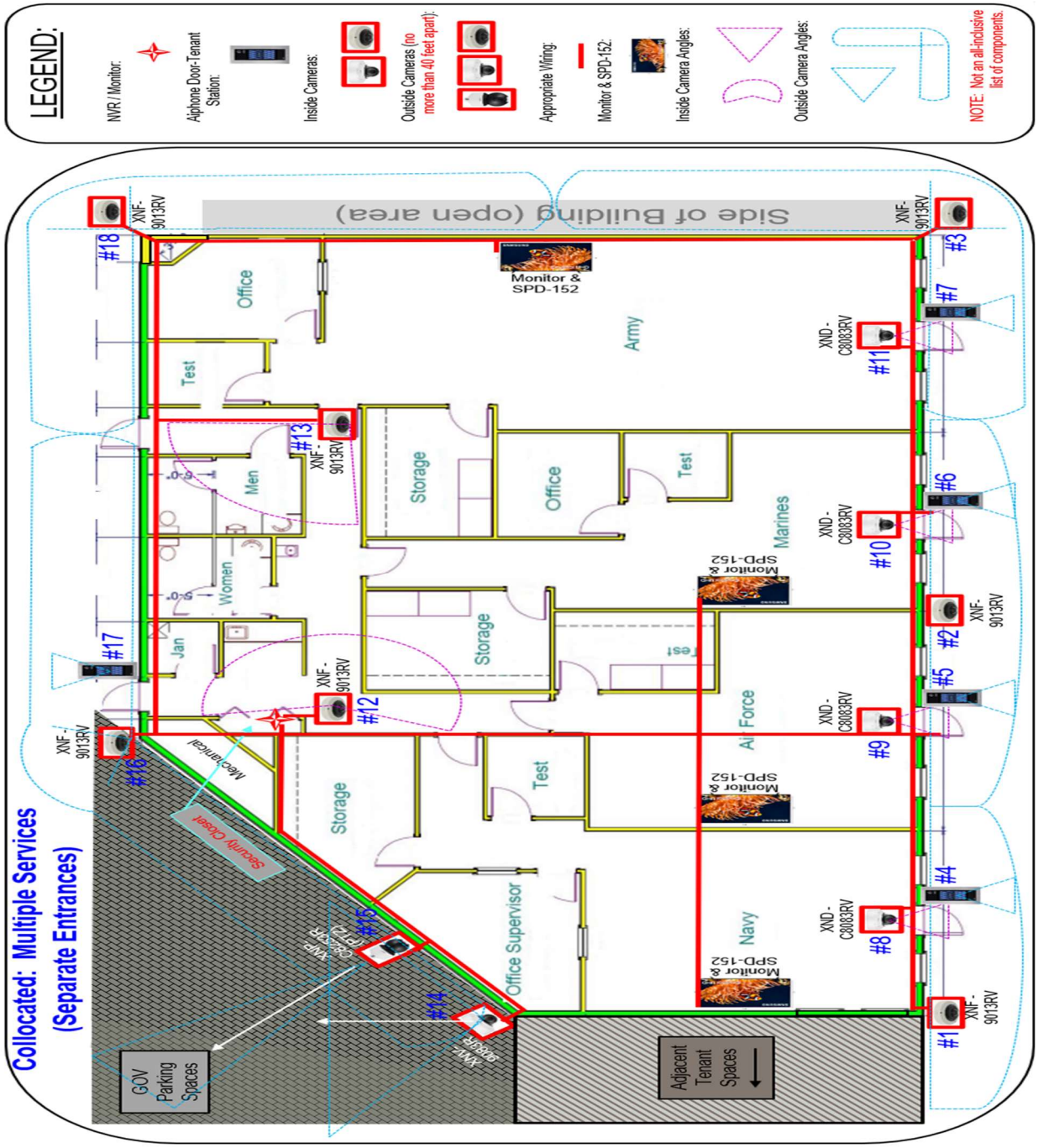

IMPORTANT: If examples conflict with the specifications, the specifications always take precedence. Coordinate with the COE representative.

U.S. ARMY CORPS OF ENGINEERS
Recruiting Facilities Program

CCTV / NVR System ~ Page 3 of 4

CCTV / NVR System - (Example Layouts)

Camera Images: Fisheye cameras (may need "zoomed windows" like "a" or "b" designations below depending on site specifics). Numbered images correspond to the appropriate layout diagrams for the NVR Monitor & the Military Service Monitors.

See *Page 2 above* for numbered camera views listed below to be shown on the Military Service(s) monitors.

Exterior Front & Side of Bldg. Areas:

- Image #1: Storefront / Primary Entrance Doors
- Image #1a: Storefront / Primary Entrance Doors (zoomed window)
- Image #1b: Storefront / Primary Entrance Doors (zoomed window)
- Image #2: Storefront / Primary Entrance Doors
- Image #3: Storefront / Primary Entrance Doors / side of bldg.
- Image #3a: Storefront / Primary Entrance Doors (zoomed window)
- Image #3b: Storefront / Side of Bldg. (zoomed window)
- Image #4: Storefront / Primary Entrance Doors
- Image #5: Storefront / Primary Entrance Doors
- Image #6: Storefront / Primary Entrance Doors
- Image #7: Storefront / Primary Entrance Doors
- Image #19?: POSSIBLE Other Camera Locations

Interior Military Service Exclusive Areas:

- Image #8: Primary Entrance Door
- Image #9: Primary Entrance Door
- Image #10: Primary Entrance Door
- Image #11: Primary Entrance Door
- Image #20?: POSSIBLE Other Camera Locations

Interior Common Areas:

- Image #12: Common Area Hallway
- Image #13: Common Area Hallway
- Image #21?: POSSIBLE Other Camera Locations

Exterior GOV Parking Areas:

- Image #14: GOV Parking
- Image #15: GOV Parking PTZ
- Image #22?: POSSIBLE Other Camera Locations

Exterior Rear & Side of Bldg. Areas:

- Image #16: Rear of Bldg. / Secondary Egress Door
- Image #16a: Rear of Bldg. / Secondary Egress Door (zoomed window)
- Image #16b: Rear of Bldg. / Secondary Egress Door (zoomed window)
- Image #17: Rear of Bldg. / Secondary Egress Door
- Image #18: Rear of Bldg. / Secondary Egress Door / Side of Bldg.
- Image #18a: Rear of Bldg. / Side of Bldg. (zoomed window)
- Image #18b: Secondary Egress Door / Side of Bldg. (zoomed window)
- Image #23?: POSSIBLE Other Camera Locations

Other Situations (Site Specific Conditions):

- Image #24? (or more): POSSIBLE Other Camera Locations (examples not shown)

NVR Monitor

Hanwha: 24" SMT-2431 LED Monitor

Military Service Monitors:

Point of view from inside leased space looking out front:

- #1a (looking right) – zoomed window
- #1b (looking left) – zoomed window
- #3a (looking right) – zoomed window
- #3b (side of bldg) – zoomed window
- #12
- #13

Point of view from inside leased space looking out back:

- #6a (looking left) – zoomed window
- #6b (looking right) – zoomed window
- #8a (looking left) – zoomed window
- #8b (side of bldg) – zoomed window
- #14
- #15

Military Service Monitors

Hanwha NVR SPD-152 HDMI Network Video Decoder:

1) Installed Behind Military Monitors
2) Customized Views Required for Military Service Monitors

Samsung: 55" DU8000 Series TV

NOTE: Fisheye Cameras: Full images, plus zoomed window images (like "a" and "b" designations to the left) are all recorded at the same time.

IMPORTANT: If examples conflict with the specifications, the specifications always take precedence. Coordinate with the COE representative.

U.S. ARMY CORPS OF ENGINEERS
Recruiting Facilities Program

CCTV / NVR System ~ Page 4 of 4

ENCLOSURE #1a

GENERAL STANDARD (GS)

Communications General Overall Layout View

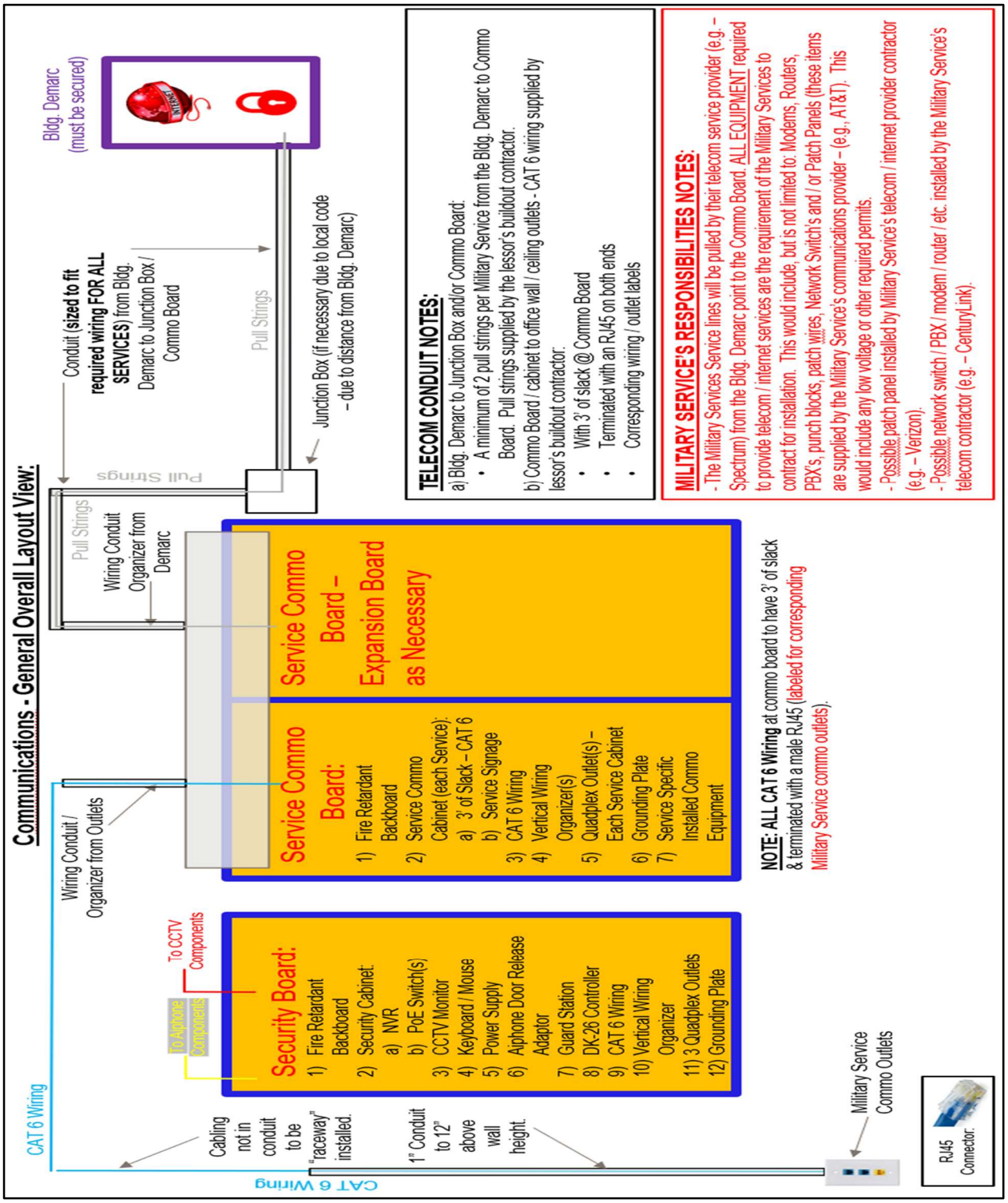

ENCLOSURE #1b

GENERAL STANDARD (GS)

Communications Diagram Example

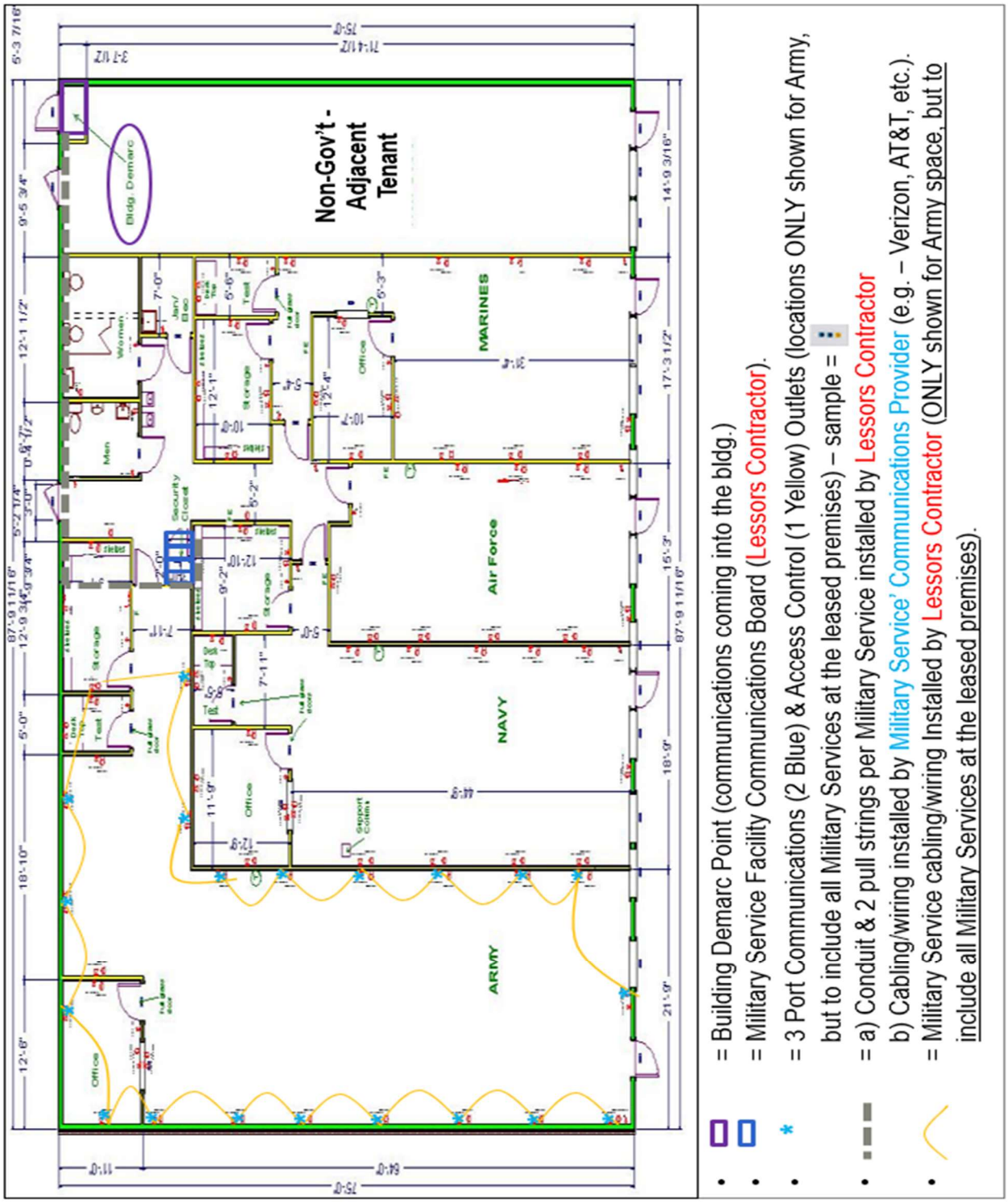

ENCLOSURE #1c

GENERAL STANDARD (GS)

Security Board Components Layout Diagram Example

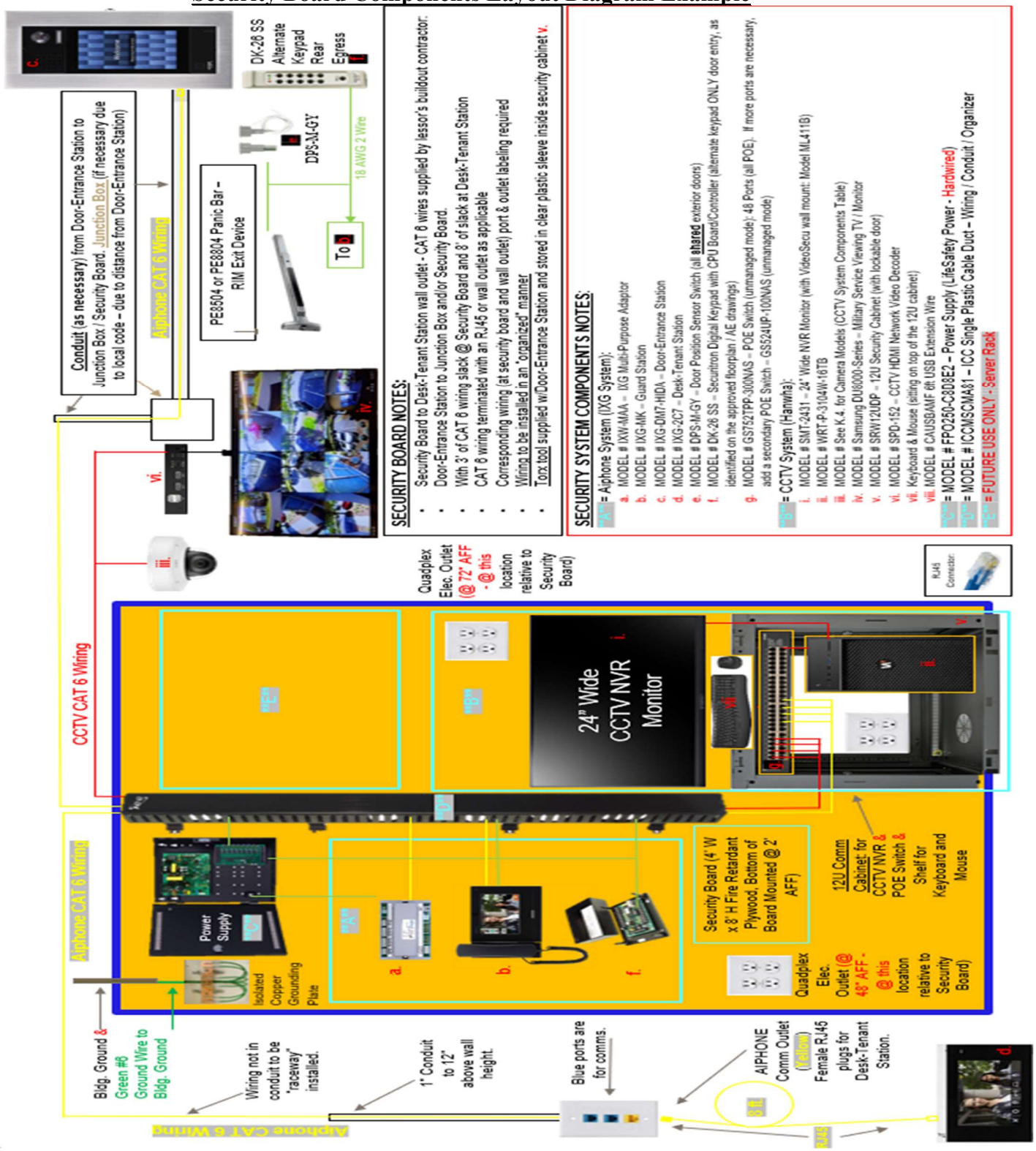

ENCLOSURE #1d

GENERAL STANDARD (GS)

Security Closet: Security & Commo Boards Components Layout Diagram Example

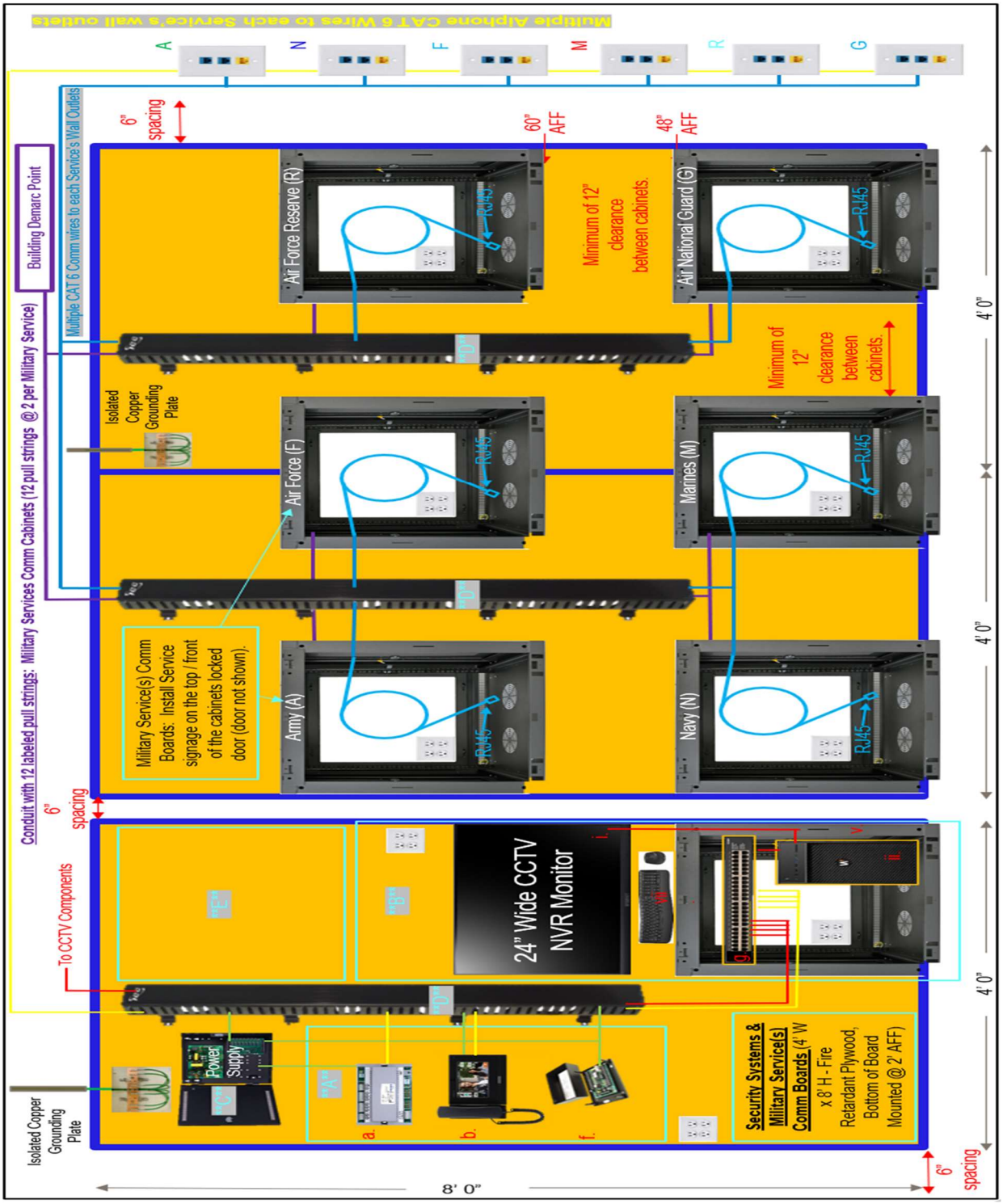

ENCLOSURE #2

GENERAL STANDARD (GS)

Porcelain Tile Pattern Design, Transitions & Grout Legend

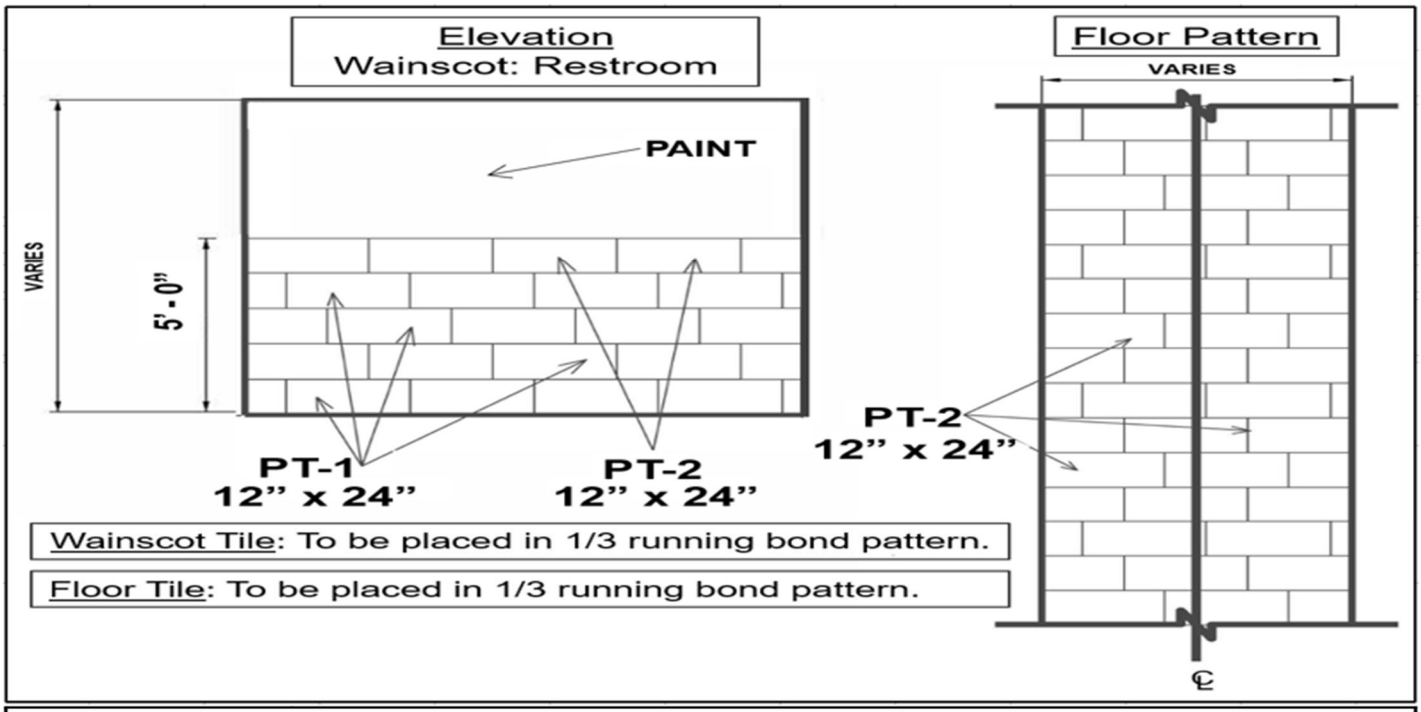

INTERIOR FINISH & MATERIALS	
Porcelain Tile / Grout / Transitions Legend	
Shaw Contract - POC / Ordering Information:	If selected, for expedited delivery - government pricing contact: Shaw Contract for ALL inquiries go to website: http://www.shawcontractgroup.com/usrecruiting. For pricing and order inquiries go to the pricing & ordering tab at the above website, or call: 1-800-356-7429 ext. 1 or email: cs.gsa@shawinc.com. For general inquiries call Michele Leise, 402-968-6025, email: michele.leise@shawcontract.com
Porcelain Tile #1 (PT-1)	Shaw Contract - US Recruiting Porcelain Standard, CT30J Sand 00200, 12x24
Porcelain Tile #2 (PT-2)	Shaw Contract - US Recruiting Porcelain Standard, CT30J Dark Grey 00550, 12x24
Grout	CT25D Duracolor Sanded Grout: Color 0D162 True Taupe (grout to be sealed). Grout joint to be per manufacturers guidelines.
Floor Tile to Wall Tile Transitions	Provide brushed chrome or brushed nickel anodized aluminum cove-shaped profile equal to Schluter Dilex with anchoring leg that is embedded in the bond coat. Transitions must be appropriate for commercial use, and for conditions and material specified.
Wall Edge Strip Transitions	Provide brushed chrome or brushed nickel anodized aluminum edge protection with an edge-protection profile at any tiled surfaces with exposed outside edges such as top of porcelain tile wall and at outside corners. Brushed chrome anodized aluminum strips must be equal to Schluter Jolly and have an anchoring leg that is embedded in the bond coat. Edge strips must be appropriate for commercial use, and for conditions and material specified.
Porcelain Floor Tile to Other Flooring Transitions	Provide brushed chrome or brushed nickel anodized aluminum transition strips equal to Schluter Reno-TK to protect flooring edges and provide a smooth transition from floor tile to other floorings such as carpet at lower elevations. Strips must have an anchoring leg that is embedded in the bond coat. Transition strips must be appropriate for commercial use, and for conditions and material specified. Comply with ADA requirements regarding transitions between surfaces of different heights as follows: Up to ¼" there are no special requirements, between ¼" and ½" a 1:2 slope ratio is required, and more than ½" 1:12 slope ratio is required. Porcelain Tile to Concrete: Provide brushed chrome or brushed nickel anodized aluminum transition strips equal to Schluter Reno-Ramp-K to protect porcelain floor tile edge and provide a smooth transition to concrete.
General Transitions Notes	1) Inside Corners - Provide a movement/sealant joint; do not grout.
	2) Provide for expansion joints per the TCNA Handbook for Ceramic , Glass, and Stone Tile Installation.
Non-Restroom Base Tile	Using PT-2 Tile, cut the 12" x 24" tiles in half lengthwise creating a 6" x 24" base tile. Transition shall be same as "Floor Tile to Wall Tile" & "Wall Edge Strip" Transitions listed above.

ENCLOSURE #3a, 3b, 3c and 3d

GENERAL STANDARD (GS)

Single Roller Shade Wiring Diagrams

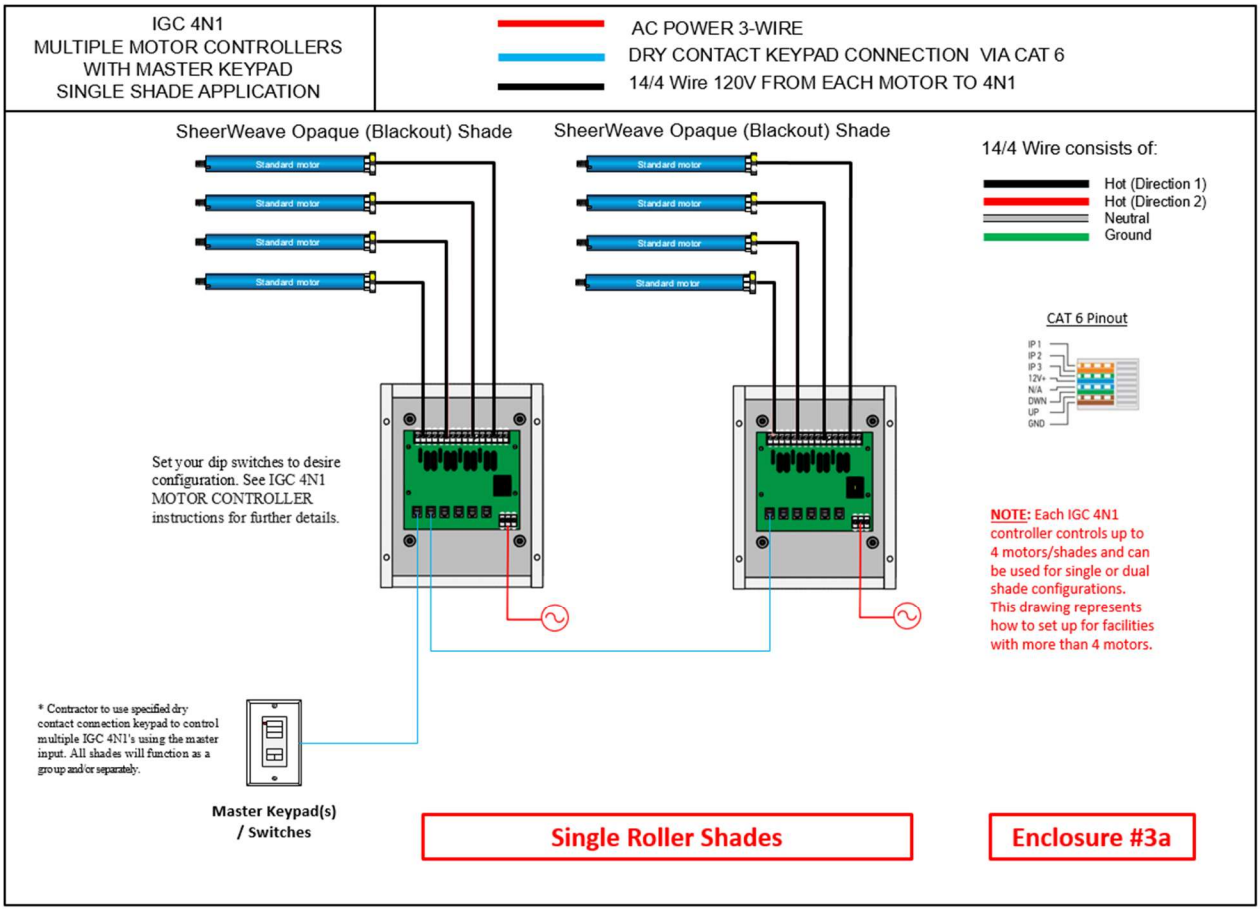

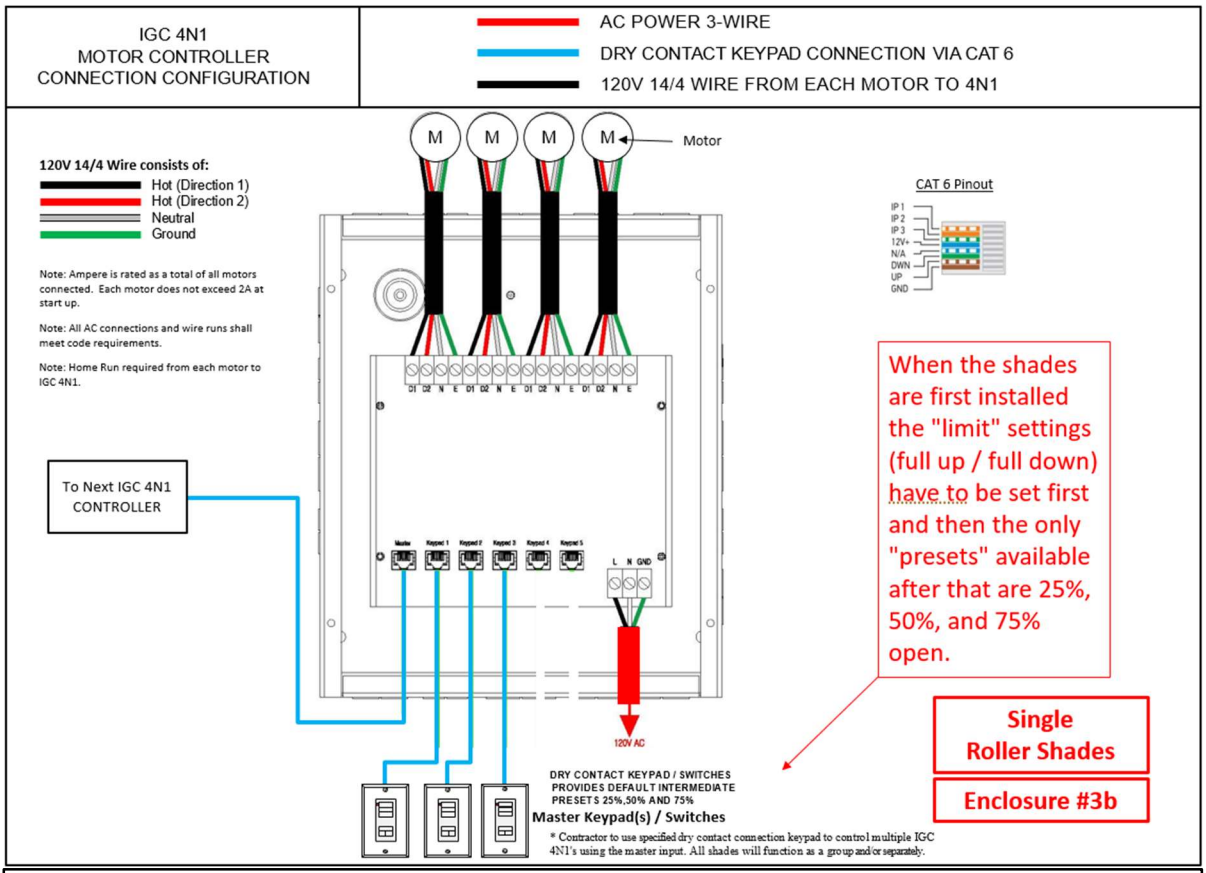
IGC 4N1
MOTOR CONTROLLER
CONNECTION CONFIGURATION
AC POWER 3-WIRE
DRY CONTACT KEYPAD CONNECTION VIA CAT 6
120V 14/4 WIRE FROM EACH MOTOR TO 4N1
M
M
M
M
Motor
120V 14/4 Wire consists of:
Hot (Direction 1)
Hot (Direction 2)
Neutral
Ground
Note: Ampere is rated as a total of all motors connected. Each motor does not exceed 2A at start up.
Note: All AC connections and wire runs shall meet code requirements.
Note: Home Run required from each motor to IGC 4N1.
CAT 6 Pinout
IP 1
IP 2
IP 3
12V+
N/A
DWN
UP
GND
To Next IGC 4N1 CONTROLLER
When the shades are first installed the "limit" settings (full up / full down) have to be set first and then the only "presets" available after that are 25%, 50%, and 75% open.
Single Roller Shades
Enclosure #3b
120V AC
DRY CONTACT KEYPAD / SWITCHES PROVIDES DEFAULT INTERMEDIATE PRESETS 25%,50% AND 75%
Master Keypad(s) / Switches
* Contractor to use specified dry contact connection keypad to control multiple IGC 4N1's using the master input. All shades will function as a group and/or separately.

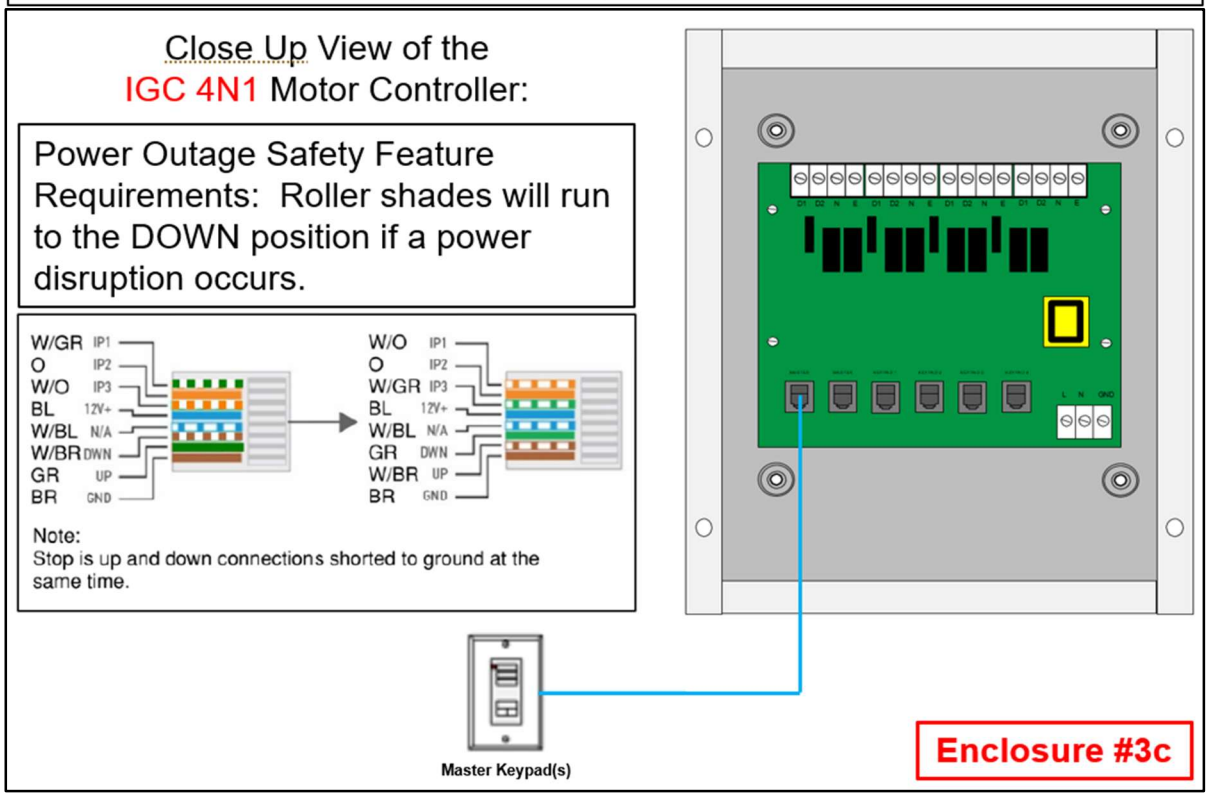
Close Up View of the
IGC 4N1 Motor Controller:
Power Outage Safety Feature Requirements: Roller shades will run to the DOWN position if a power disruption occurs.
W/GR IP1
O IP2
W/O IP3
BL 12V+
W/BL N/A
W/BR DWN
GR UP
BR GND
W/O IP1
O IP2
W/GR IP3
BL 12V+
W/BL N/A
GR DWN
W/BR UP
BR GND
Note:
Stop is up and down connections shorted to ground at the same time.
Master Keypad(s)
Enclosure #3c

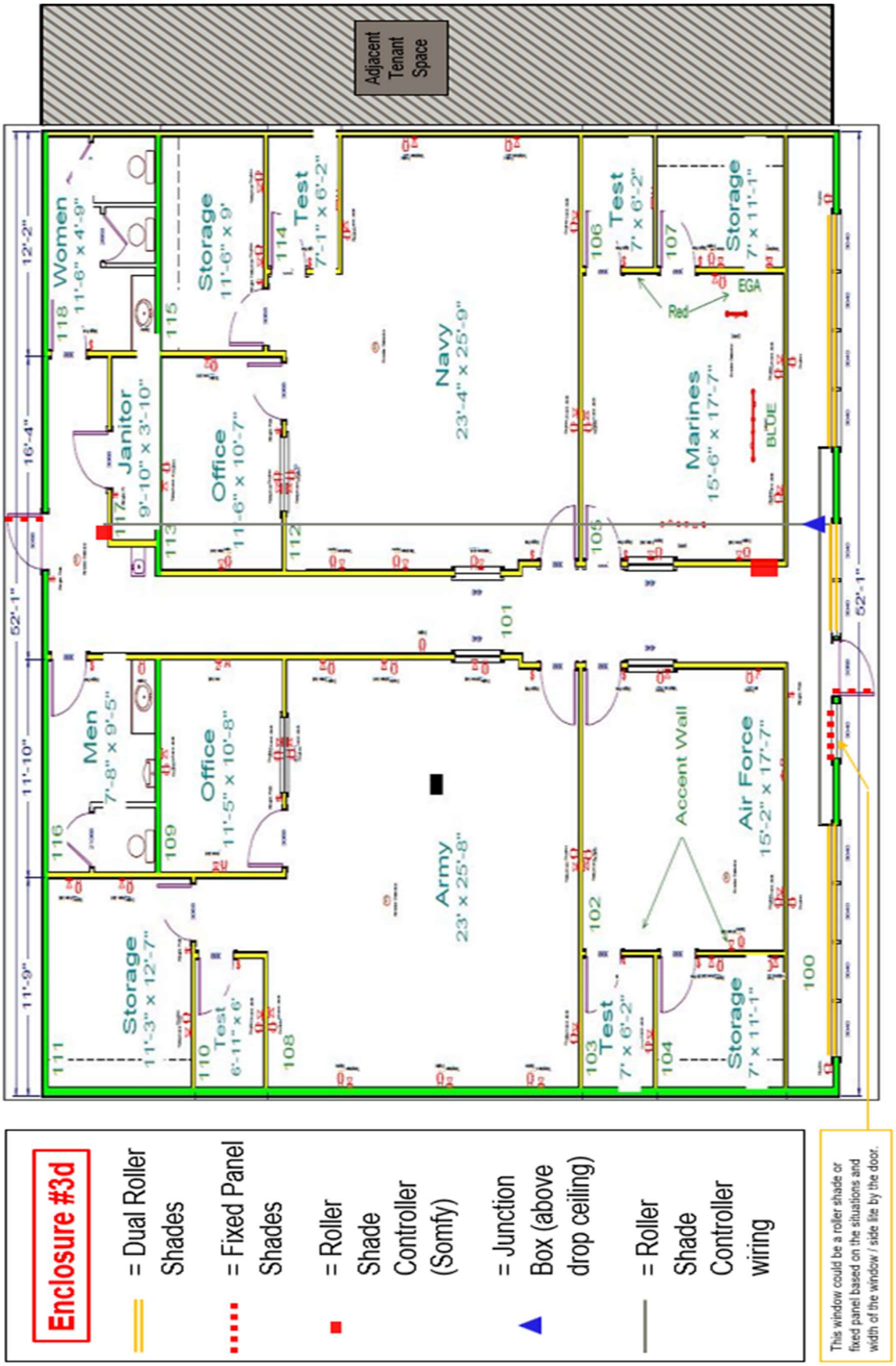

Enclosure #3d

= Dual Roller Shades

= Fixed Panel Shades

= Roller Shade Controller (Somfy)

= Junction Box (above drop ceiling)

= Roller Shade Controller wiring

This window could be a roller shade or fixed panel based on the situations and width of the window / side lite by the door.

ENCLOSURE #4a, 4b, 4c, 4d and 4e

GENERAL STANDARD (GS)

Dual Roller Shade Wiring Diagrams

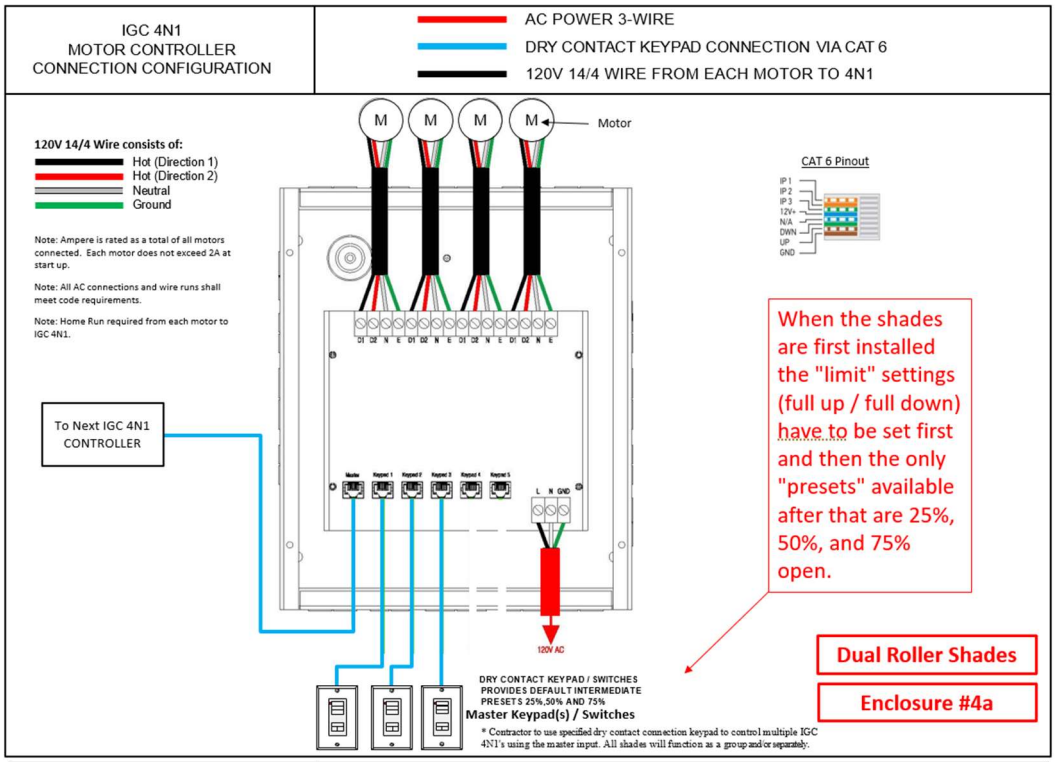

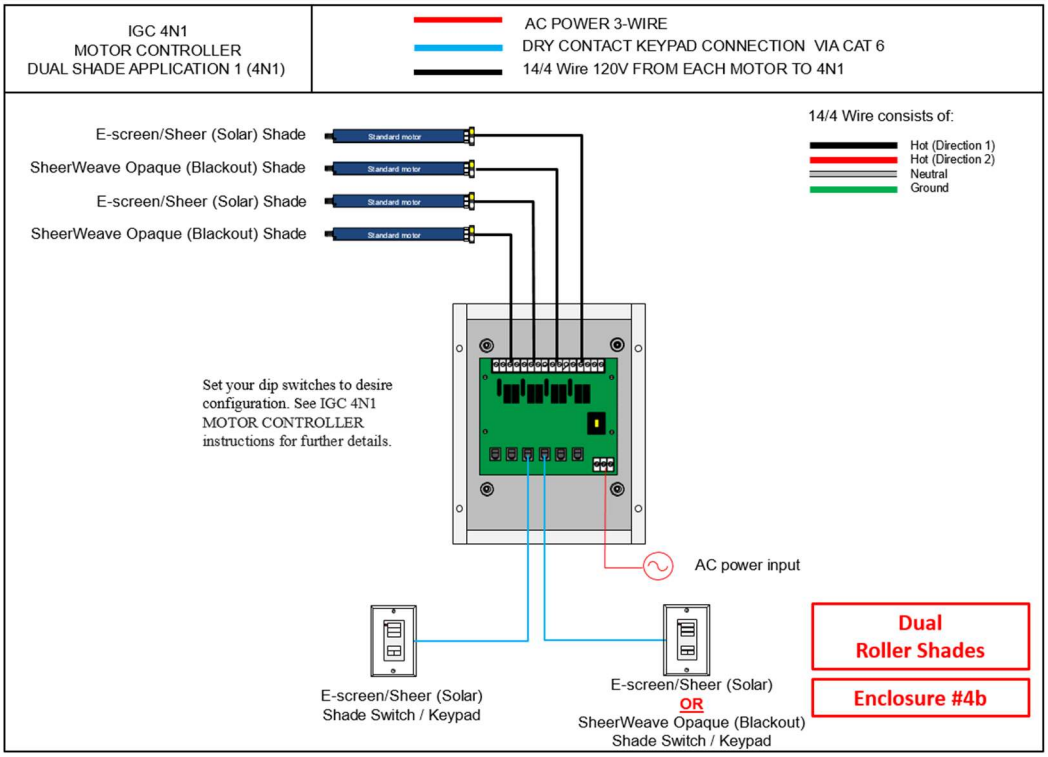

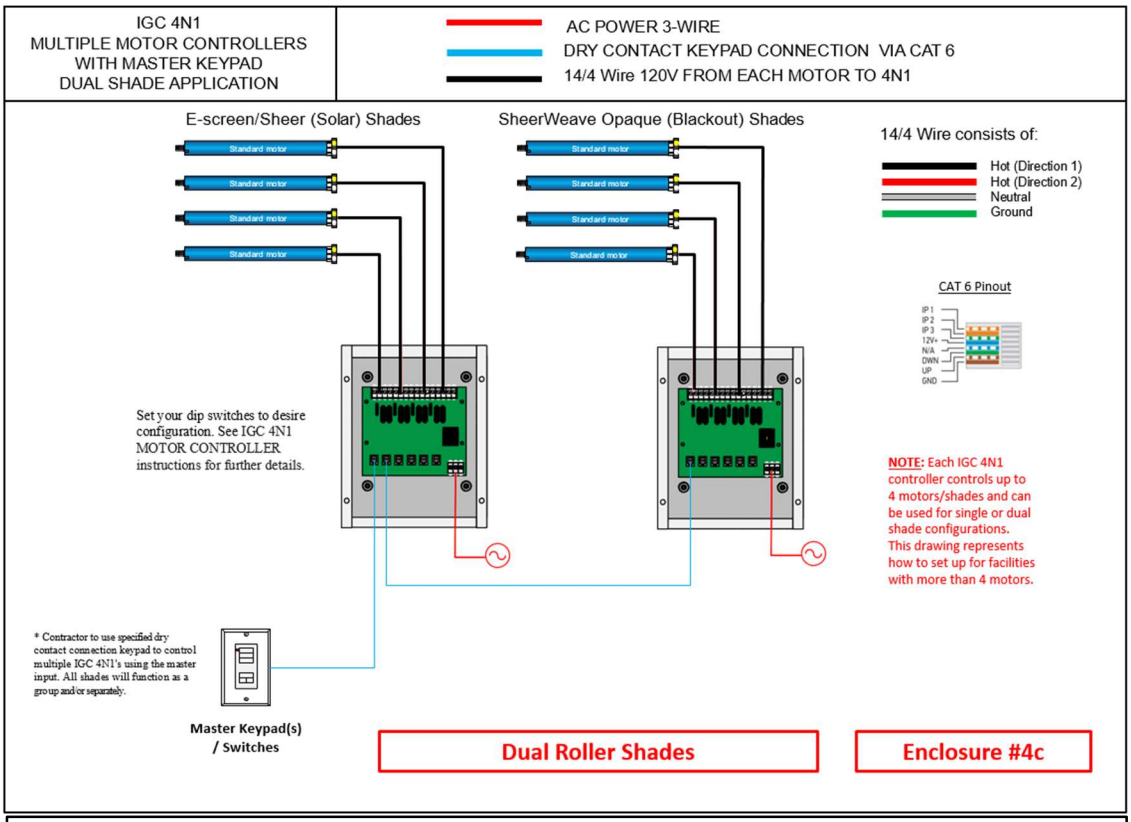
IGC 4N1
MULTIPLE MOTOR CONTROLLERS
WITH MASTER KEYPAD
DUAL SHADE APPLICATION
AC POWER 3-WIRE
DRY CONTACT KEYPAD CONNECTION VIA CAT 6
14/4 Wire 120V FROM EACH MOTOR TO 4N1
E-screen/Sheer (Solar) Shades
SheerWeave Opaque (Blackout) Shades
Standard motor
14/4 Wire consists of:
Hot (Direction 1)
Hot (Direction 2)
Neutral
Ground
CAT 6 Pinout
Set your dip switches to desire configuration. See IGC 4N1 MOTOR CONTROLLER instructions for further details.
NOTE: Each IGC 4N1 controller controls up to 4 motors/shades and can be used for single or dual shade configurations. This drawing represents how to set up for facilities with more than 4 motors.
* Contractor to use specified dry contact connection keypad to control multiple IGC 4N1's using the master input. All shades will function as a group and/or separately.
Master Keypad(s) / Switches
Dual Roller Shades
Enclosure #4c

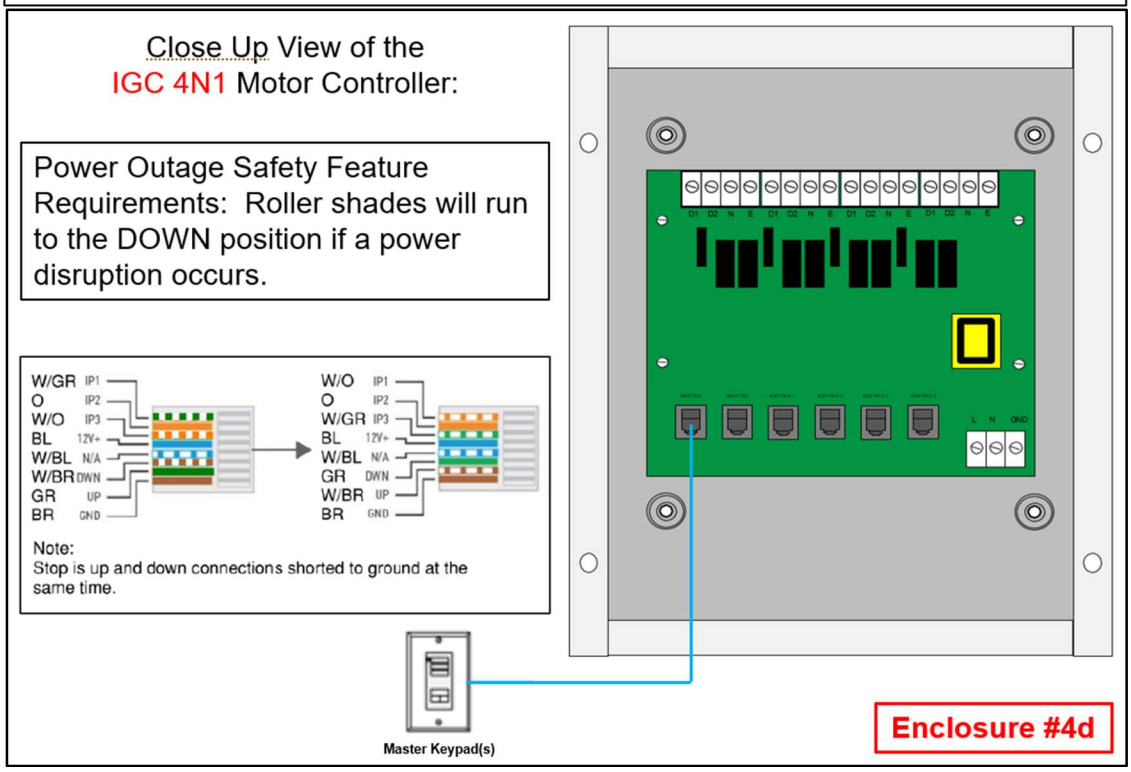
Close Up View of the
IGC 4N1 Motor Controller:
Power Outage Safety Feature Requirements: Roller shades will run to the DOWN position if a power disruption occurs.
W/GR IP1
O IP2
W/O IP3
BL 12V+
W/BL N/A
W/BR DWN
GR UP
BR GND
W/O IP1
O IP2
W/GR IP3
BL 12V+
W/BL N/A
GR DWN
W/BR UP
BR GND
Note:
Stop is up and down connections shorted to ground at the same time.
Master Keypad(s)
Enclosure #4d

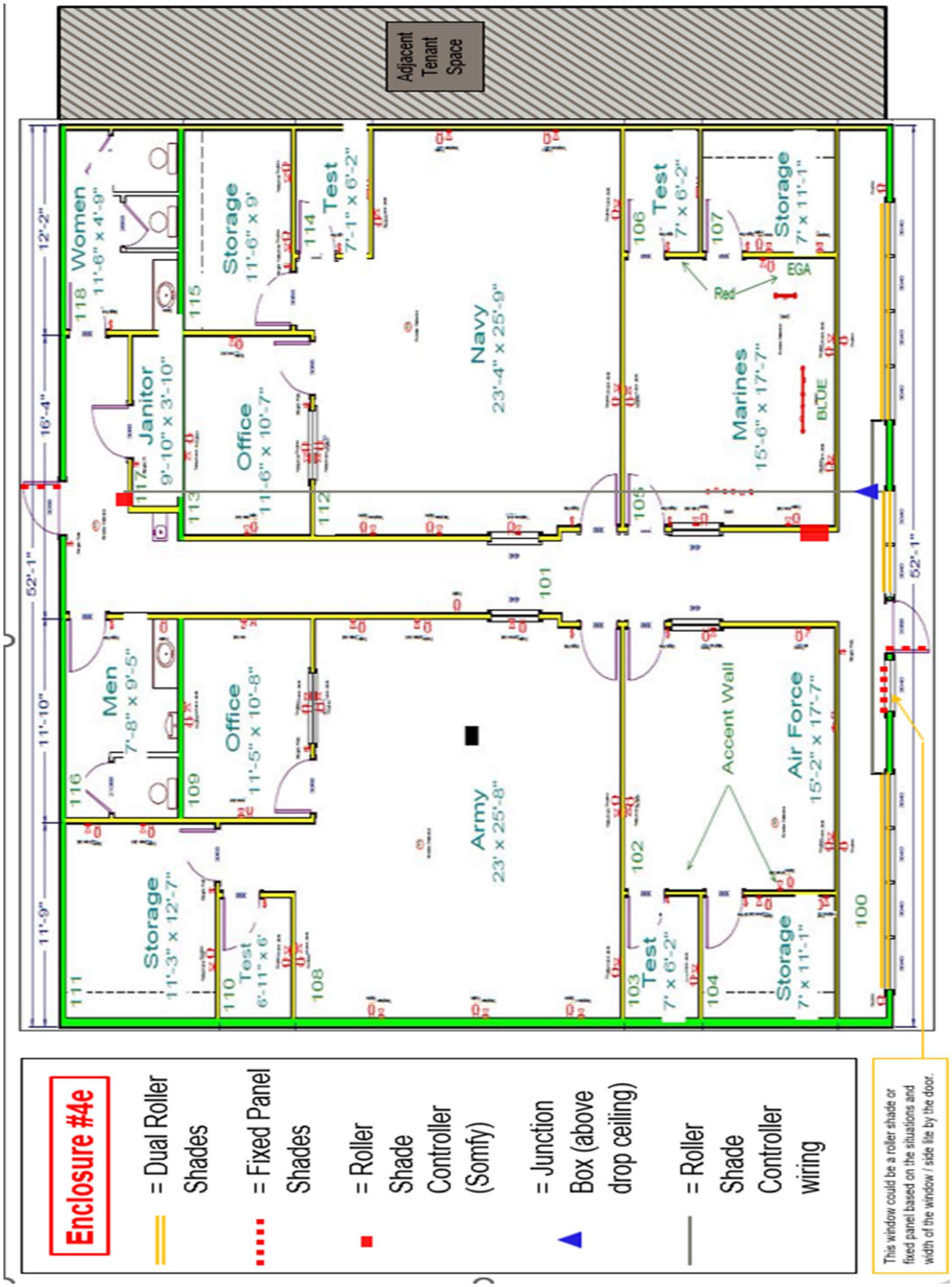
Adjacent Tenant Space
Women
11'-6" x 4'-9"
118
Janitor
9'-10" x 3'-10"
117
Storage
11'-6" x 9'
115
Office
11'-6" x 10'-7"
113
Test
7'-1" x 6'-2"
114
112
Navy
23'-4" x 25'-9"
101
Test
7' x 6'-2"
106
105
Storage
7' x 11'-1"
107
Marines
15'-6" x 17'-7"
Rad
EGA
BLOE
Men
7'-8" x 9'-5"
116
Office
11'-5" x 10'-8"
109
Storage
11'-3" x 12'-7"
111
Test
6'-11" x 6'
110
108
Army
23' x 25'-8"
102
Accent Wall
Test
7' x 6'-2"
103
Storage
7' x 11'-1"
104
Air Force
15'-2" x 17'-7"
100
12'-2"
16'-4"
52'-1"
11'-10"
11'-9"
52'-1"
Enclosure #4e
= Dual Roller Shades
= Fixed Panel Shades
= Roller Shade Controller (Somfy)
= Junction Box (above drop ceiling)
= Roller Shade Controller wiring
This window could be a roller shade or fixed panel based on the situations and width of the window / side lite by the door.

ENCLOSURE #5

GENERAL STANDARD (GS)

Fixed Panel Shade Details

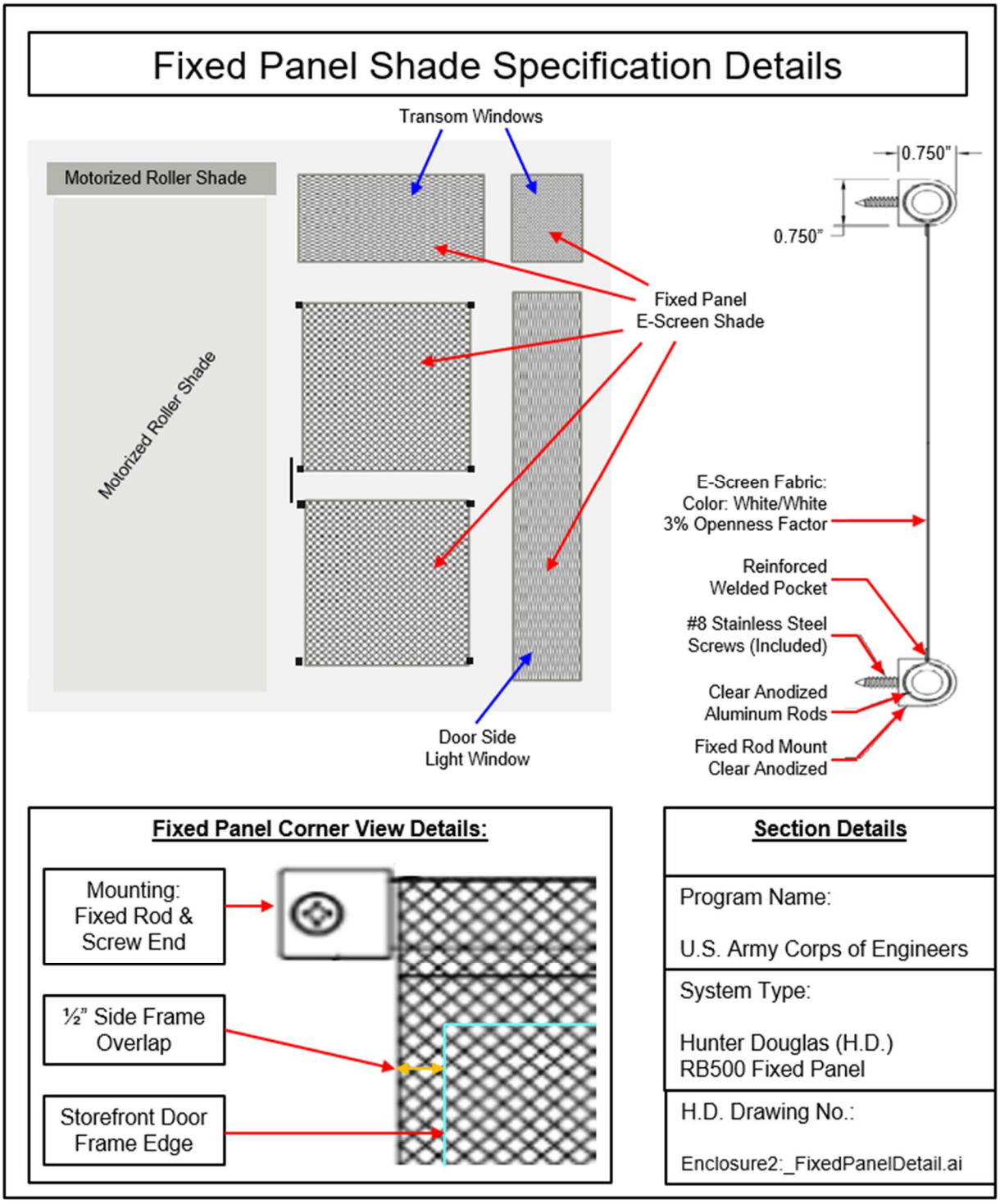

ENCLOSURE #6a, 6b, 6c and 6d

GENERAL STANDARD (GS)

Video Intercom Entry Control (EC) - IXG System Wiring Diagrams & Example Setup

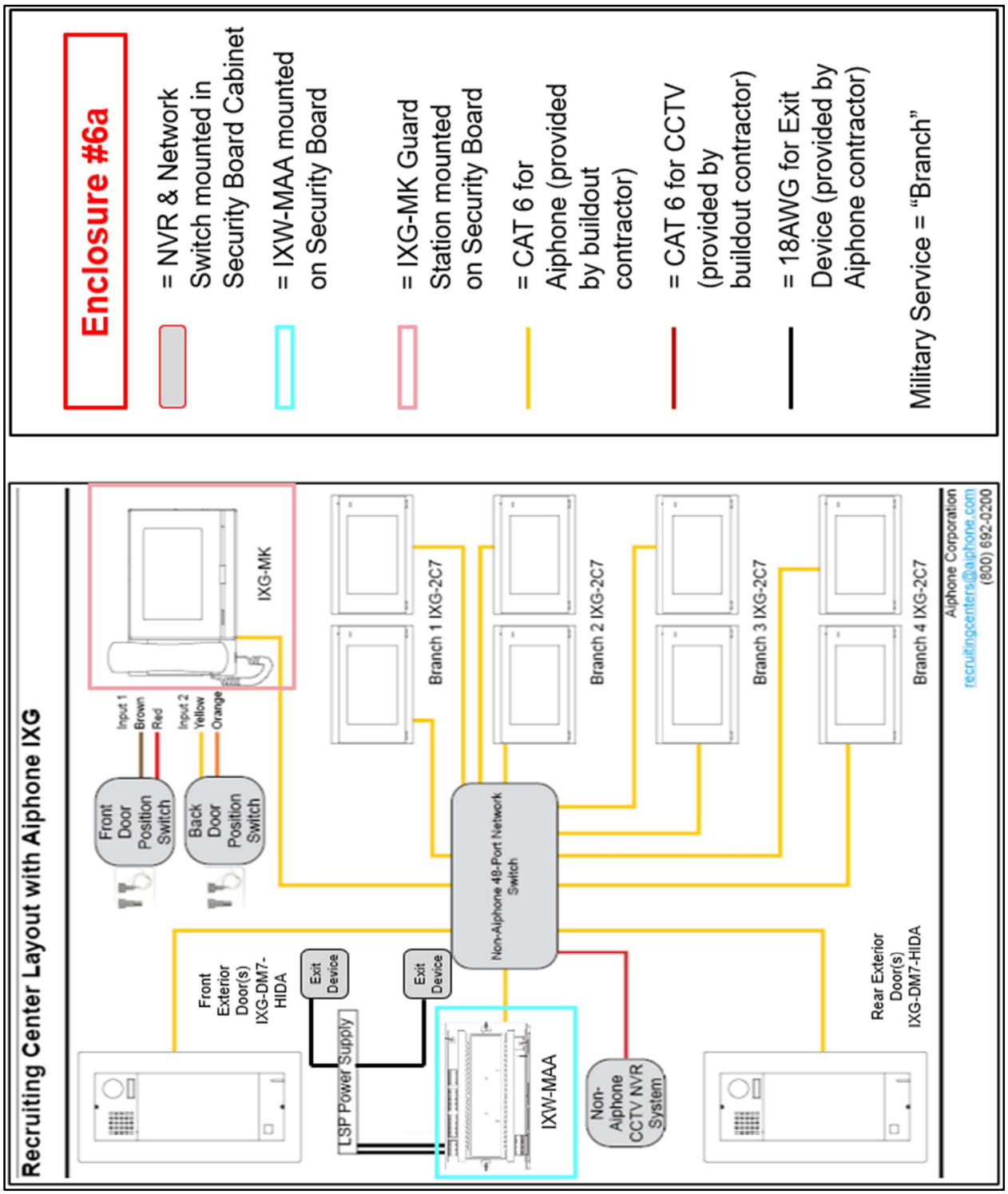

IXW-MAA

Multi-Purpose Adaptor for the IX Series

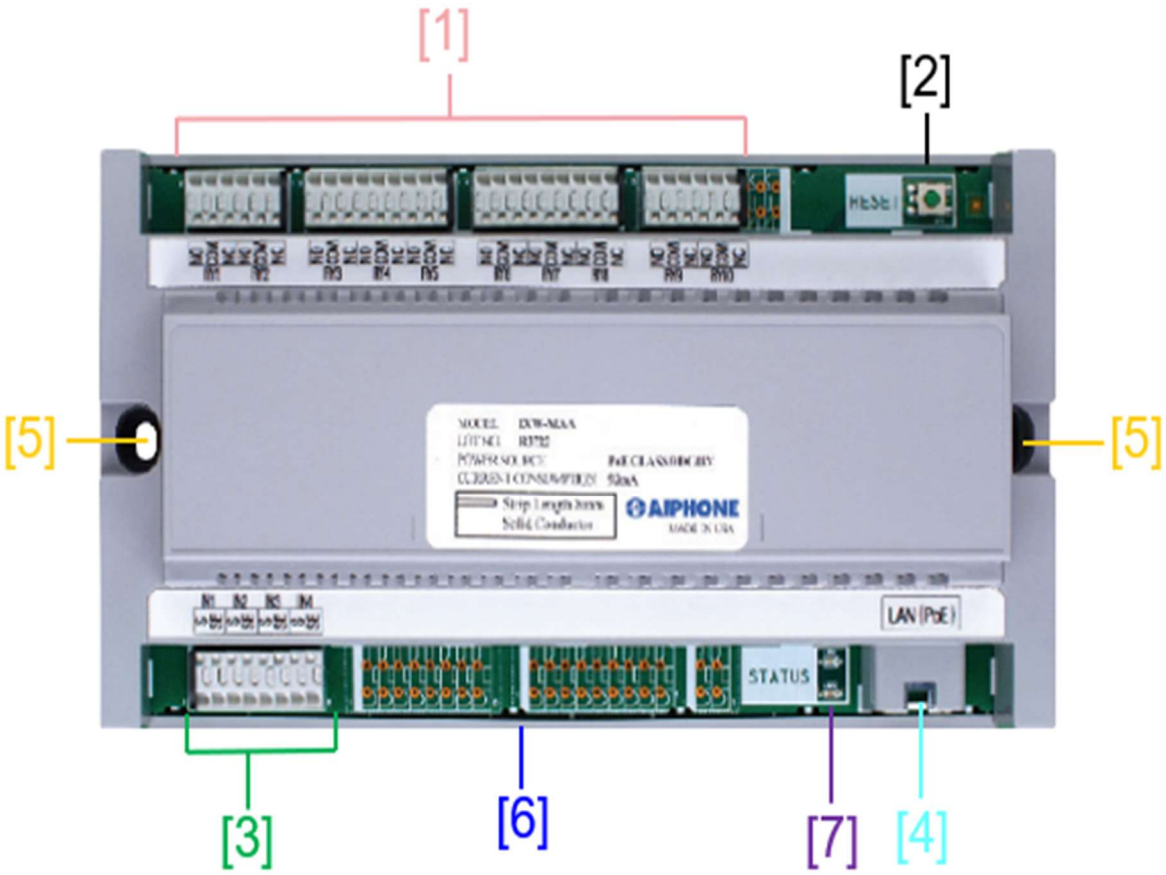

Feature Call-Out Definitions:

[1]: Contact Outputs 1 – 10

[2]: Reset Button

[3]: Contact Inputs 1 – 4

[4]: LAN Port

[5]: Mounting Point(s)

[6]: DIN Rail Mount (on back of adaptor)

[7]: Status Indicators

Enclosure #6b

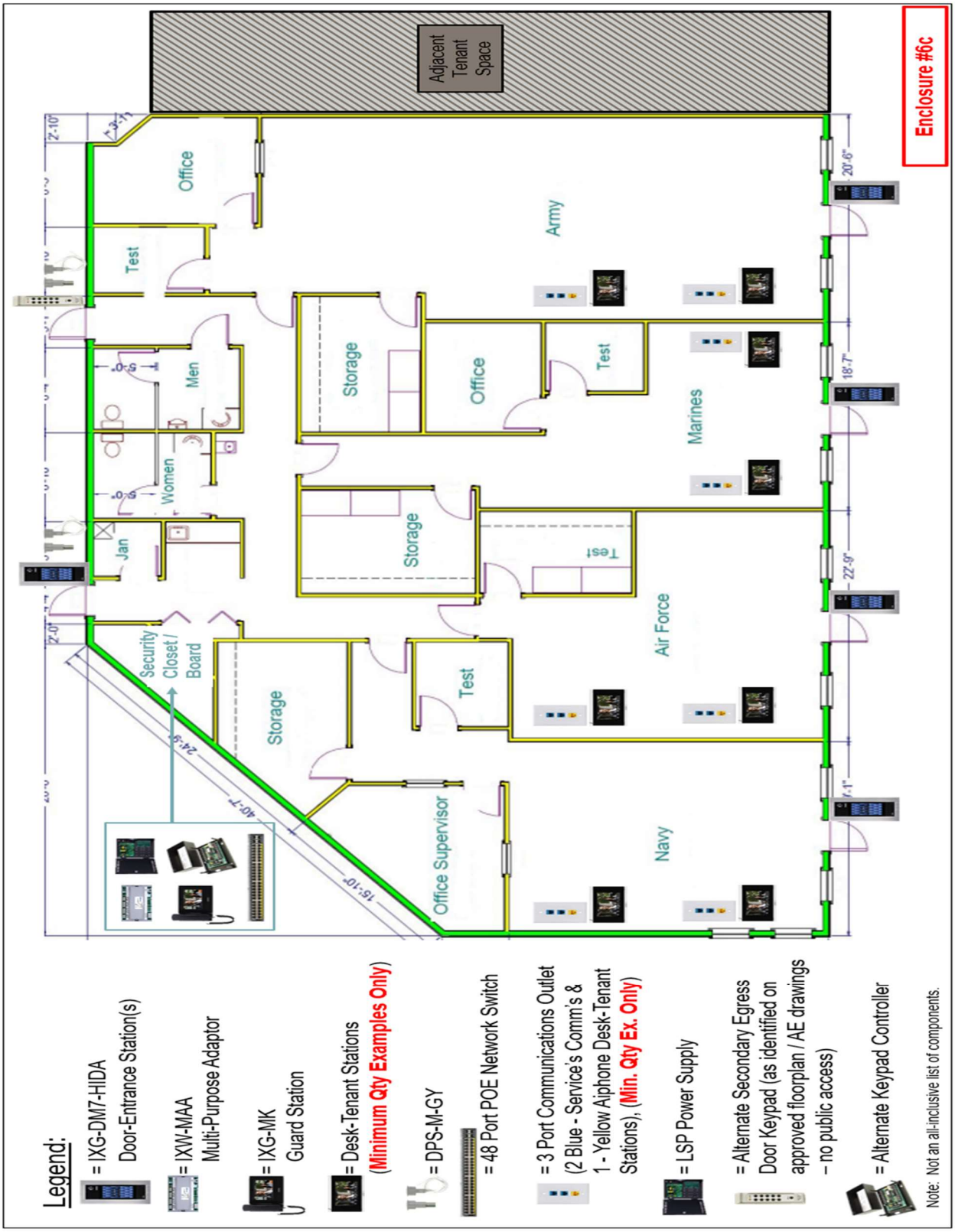
Enclosure #6c
Adjacent Tenant Space
Office
Test
Men
Women
Jan
Storage
Office
Test
Army
Marines
Storage
Test
Air Force
Security Closet / Board
Storage
Test
Office Supervisor
Navy
Legend:
= IXG-DM7-HIDA Door-Entrance Station(s)
= IXW-MAA Multi-Purpose Adaptor
= IXG-MK Guard Station
= Desk-Tenant Stations (Minimum Qty Examples Only)
= DPS-M-GY
= 48 Port POE Network Switch
= 3 Port Communications Outlet (2 Blue - Service's Comm's & 1 - Yellow Aiphone Desk-Tenant Stations), (Min. Qty Ex. Only)
= LSP Power Supply
= Alternate Secondary Egress Door Keypad (as identified on approved floorplan / AE drawings – no public access)
= Alternate Keypad Controller
Note: Not an all-inclusive list of components.

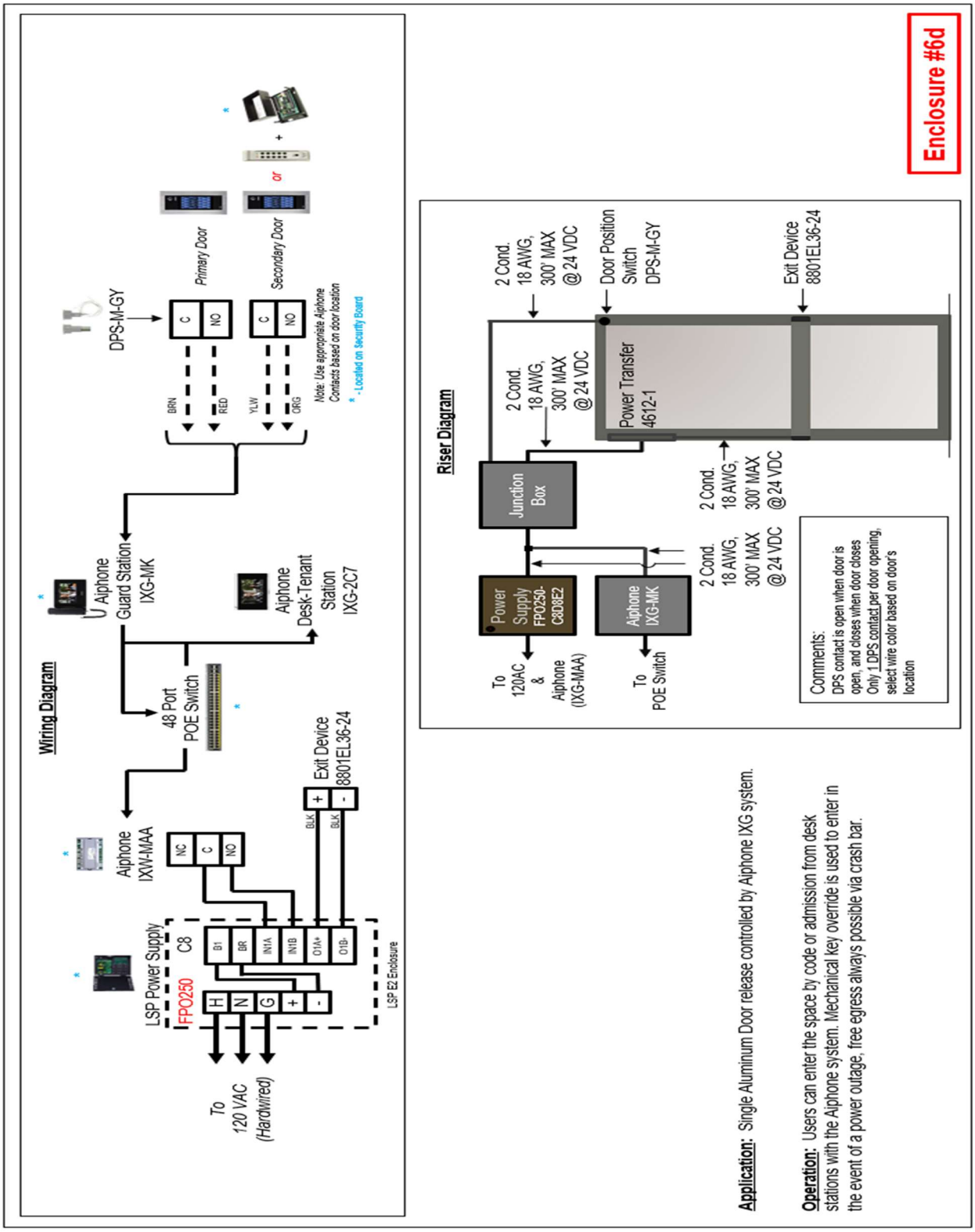
Wiring Diagram
DPS-M-GY
Primary Door
Secondary Door
C
NO
BRN
RED
YLW
ORG
Note: Use appropriate Aiphone Contacts based on door location
* - Located on Security Board
Aiphone Guard Station IXG-MK
Aiphone Desk-Tenant Station IXG-2C7
48 Port POE Switch
Aiphone IXW-MAA
NC
LSP Power Supply
FPO250 C8
B1
BR
IN1A
IN1B
O1A+
O1B-
H
N
G
+
-
LSP E2 Enclosure
To 120 VAC (Hardwired)
Exit Device 8801EL36-24
BLK
Riser Diagram
2 Cond. 18 AWG, 300' MAX @ 24 VDC
Door Position Switch DPS-M-GY
Exit Device 8801EL36-24
Power Transfer 4612-1
Junction Box
Power Supply FPO250-C8D8E2
Aiphone IXG-MK
To 120AC & Aiphone (IXG-MAA)
To POE Switch
Comments:
DPS contact is open when door is open, and closes when door closes
Only 1 DPS contact per door opening, select wire color based on door's location
Application: Single Aluminum Door release controlled by Aiphone IXG system.
Operation: Users can enter the space by code or admission from desk stations with the Aiphone system. Mechanical key override is used to enter in the event of a power outage, free egress always possible via crash bar.
Enclosure #6d

ATTACHMENT "1"

NOTE: Within Military Service specific attachments all General Standards (GS) will apply except where specifically differentiated.

ARMY SPECIFIC STANDARDS

A. General Guidance: Same as General Standard (**GS**).
B. Mechanical: **GS.**
C. Plumbing: GS.
D. Electrical: GS w/guidance: See G.2.a below.
E. Communications: GS.
F. Safety and Fire Equipment: GS.
G. Architectural Finishes-Fixtures-Supplies:
1. **Ceilings: GS.**
2. **Walls: GS w/guidance:**
   a. **Mounting pole: Displays2Go, Model # SLC3770LBK - https://www.displays2go.com/P-29667/Swivel-Ceiling-TV-Mount-Flat-Inclined-Surfaces (telescoping pole sized for specific installation location, screen size and weight requirements, with 360° rotation and 25° tilting capable bracket).**
      1. Two (2) pull strings to be provided thru the mounting pole (allowing the Army to pull wiring thru / inside the mounting pole (power, ethernet wires, etc.) to the TV from the outlets.
      2. Pole to be mounted to understructure (through the drop ceiling tile). Location, as identified on the approved floor plan / AE drawing, along with:
         i. Army to install TV at a later time (expected mounting of TV at a vertical height of **8'-6" AFF**.
         ii. Bracing / framing to support minimal sway / movement.
         iii. Installation to include a "ceiling plate" or "ceiling mast trim ring" cover (to cover the hole for the pipe in the drop ceiling) and secured to the ceiling tile (may require additional support above the ceiling tile to prevent future ceiling tile sagging / damage). Color to match pole color.
         iv. Within an appropriate distance along the wall (e.g. – approximately within 6" to 8", allowing for appropriate movement at the location).
         v. Corner mounted TVs will need to allow for corner clearance:
            - Inside corners to have mounting of TVs at a 45° angle (or an adjusted ° by the COE representative). Pole location will need to be adjusted accordingly to allow full functionality of the mounting bracket tilt function.
            - Outside corners to have pole mounted as close to the corner as possible (to allow full functionality of the mounting bracket tilt function), and allow up to 270° rotation.
              a. Duplex outlet, and communications outlet box (with CAT 6) to be installed and concealed above ceiling tiles directly above TV mounting location.

ARMY PAINT SCHEDULE						
Mfr:	**Color Name:**	**Color #:**	**Product:**	**Coats:**	**Finish:**	**Area:**
Sherwin Williams	PRIMER	ProMar 200 White (see Note 1)	B28W02600	2	Latex: Acrylic Primer	All Walls / All Painted Trim
Sherwin Williams	United States Army Recruiting Off-White	SW 6148 Wool Skein	B20W12651	2	Latex: Eg-Shel	Walls
Sherwin Williams	United States Army Recruiting Khaki	SW 6150 Universal Khaki	B31W2651	2	Latex: Semi-Gloss	Trim
Sherwin Williams	United States Army Recruiting Green	SW 6166 Eclipse	B20T2654	2	Latex: Eg-Shel	Accent Wall

Note 1:	**ProMar 200 Primer to be tinted to match the applicable wall color for all walls, and all painted trim.**
Note 2:	Paint schemes and accent wall finishes to be applied as referenced on the approved floor plan / AE drawing / finish schedule.
Note 3:	**Accent wall** to be: United States Army Recruiting Green.
Note 4:	**Restrooms: See Common Area Paint Schedule.**
Note 5:	If selected, contractor should request Sherwin Williams' colors as "United States Army Recruiting..." Formulas to these color names are available on Sherwin Williams' National Accounts Database.

3. **Flooring:**
   a. **Porcelain Entry Tiles (Entrance-Front / Rear Exterior Exit Areas): GS** - *see* ***ENCLOSURE #2.***
   b. **Base Cove (for VCT & Carpet only):** Johnsonite / Tarkett (**https://distributor.tarkett.com**), Rubber; Color: #40, Black, 4" H.
   c. **Storage Areas:** Vinyl composition tile (VCT) with base cove, shall be installed. Style and Color to be AHF / Armstrong Imperial Texture, Standard Excelon, 51811 Antique White. Provide a VCT transition (color: black) to other flooring materials per manufacturer's recommendation.
   d. **Restroom(s): GS.**
   e. **Janitorial-Mechanical Room(s): GS.**
   f. **Carpet Schedule (office, test room and related areas):** Carpet tiles with base cove shall be installed throughout the entire office space except storage rooms, restrooms, common area lobbies, corridors, and exit areas. All carpet must be installed smoothly and evenly in accordance with manufacturer's instructions and *with the approved low Volatile Organic Compounds (VOC's) release adhesive*. **One (1) extra box of carpet tiles (for each Military Service at this location) shall be left in the security closet** (see paragraph K.2.n. for more details) **for future use.**

ARMY CARPET SCHEDULE	
Manufacturer / Style:	Shaw / U.S. Army Recruiting Standard: # 802E5
Color (Name, Number):	Duty, BB90D
Product:	Carpet Tile
Installation Method:	Quarter Turn
Installation Adhesive:	"LokDots" Adhesive System
Note: If selected, for expedited delivery - government pricing contact: Shaw Contract for ALL inquiries go to website: **www.shawcontract.com/usrecruiting**. For pricing and order inquiries go to the pricing & ordering t at the above website, or call: 1-800-356-7429 ext. 1 or email: **cs.gsa@shawinc.com**. For general inquiries call Michele Leise, 402-968-6025, email: **michele.leise@shawcontract.com**	

4. **Windows: GS.**
5. **Doors: GS.**
6. **Restroom Accessories and Miscellaneous: GS.**
7. **Miscellaneous:**
   a. **Exterior Windows / Doors:**
   b. **Perforated Window Wraps:** Wraps will need an 80/20 version to account for the black wrap design. 3m does not have an 80/20 option. Use **Continental Grafix - 8020, Sihl – 3215 Waze 80/20** or equivalent options
   c. **Interior Windows / Doors: GS.**
   d. **Mail Delivery: GS.**
   e. **Chair Rail:** NO chair rail to be installed.
   f. **Shelving: GS.**
   g. **Desktop:** NO desktop to be installed.

H. Signage:

1. **Exterior Signage:** Lessor to confirm whether sign is approved for use. Channel letter returns and raceway color to match building façade. If approved, the COE will provide an EPS file to the Lessor with appropriate sign design standards.

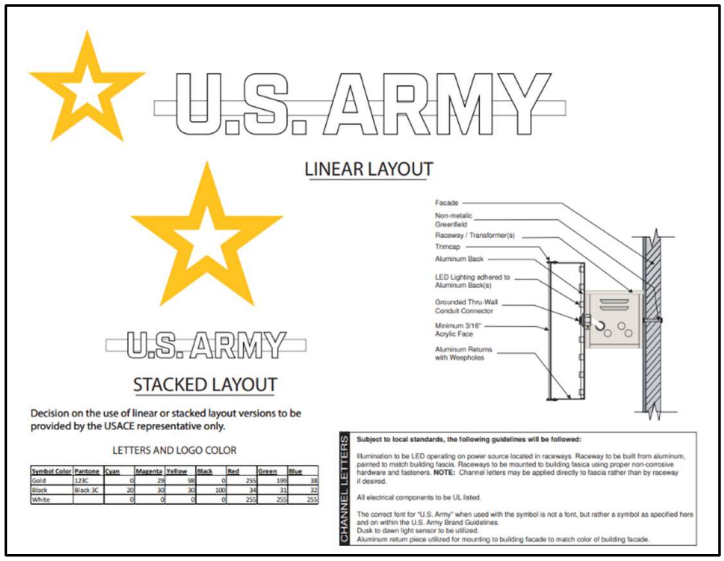

2. Individual Army <u>Stand-Alone</u> Marquee / Pylon / Monument Signage:

MONUMENT/PYLON SIGN

3. Interior Signage: GS.

I. Parking: GS.

J. Landscaping: GS.

GENERAL NOTES: GS.

ATTACHMENT "2"

NOTE: Within Military Service specific attachments all General Standards (GS) will apply except where specifically differentiated.

NAVY SPECIFIC STANDARDS

A. General Guidance: Same as General Standard (GS).
B. Mechanical: GS.
C. Plumbing: GS.
D. Electrical: GS.
E. Communications: GS.
F. Safety and Fire Equipment: GS.
G. Architectural Finishes-Fixtures-Supplies: GS w/guidance:
  1. Ceilings: GS.
  2. Walls: GS w/guidance:
    a. Wood Blocking: The Lessor will confirm the walls and exact locations with COE representative for the installation of ¾" plywood backing (with an area of 48" x 48") which will be utilized in the hanging of the Navy's heavy "Chain of Command" & "Navy Accessions Recruits" picture frames (picture frames to be provided and installed by the Navy.) See approved floor plan / AE drawing for locations. The wood blocking (example: **https://www.clarkdietrich.com/products/fastback-backing-system-fbbc**) will be installed flush to studding and be affixed to withstand a dead load of 50 pounds. If applicable, on existing walls, drywall is to be removed, blocking installed, and drywall replaced and repaired as required for the blocking installation. Horizontal blocking will be set to allow installation of the picture frame at vertical height of **6'-0" AFF**. If an obstruction prevents the installation of the picture frame at **6'-0" AFF**, the tolerance for installation is +/- 6".

NAVY PAINT SCHEDULE

Mfr:	Color Name:	Color #:	Color:	Coats:	Finish:	Area:
Sherwin Williams	PRIMER	ProMar 200 White (see Note 1)	B28W02600	2	Latex: Acrylic Primer	All Walls / All Painted Trim
Sherwin Williams	United States Navy Recruiting White	SW 7757 High Reflective White	B20W2650	2	Latex: Eg-Shel	Walls (above chair rail)
Sherwin Williams	United States Navy Recruiting Blue	SW 9177 Salty Dog	B20T2654	2	Latex: Semi-Gloss	Walls (below chair rail)
Sherwin Williams	United States Navy Recruiting Gold	SW6903 Cheerful	B31Y2657	2	Latex: Semi-Gloss	Chair Rail
Sherwin Williams	United States Navy Recruiting White	SW 7757 High Reflective White	B31W2650	2	Latex: Semi-Gloss	Trim

Note 1: ProMar 200 Primer to be tinted to match the applicable wall color for all walls, and all painted trim.
Note 2: Paint schemes and wall finishes to be applied as referenced on the approved floor plan / AE drawing / finish schedule.
Note 3: Walls to be: United States Navy Recruiting White ***above*** chair rail and
United States Navy Recruiting Blue ***below*** the chair rail.
Note 4: Chair Rail shall have semi-gloss finish; color to be: United States Navy Recruiting Gold.
Note 5: Restrooms: See Common Area Paint Schedule.
Note 6: If selected, contractor should request Sherwin Williams' colors as "United States Navy Recruiting..."
Formulas to these color names are available on Sherwin Williams' National Accounts Database.

3. **Flooring:**
   a. **Porcelain Entry Tiles (Entrance-Front / Rear Exterior Exit Areas): GS** - *see* ***ENCLOSURE #2.***
   b. **Base Cove (for VCT & Carpet only):** Johnsonite / Tarkett (**https://distributor.tarkett.com**), Rubber; Color: #40, Black, 4" H.
   c. **Storage Areas:** Vinyl composition tile (VCT) with base cove, shall be installed. Style and Color to be AHF / Armstrong Imperial Texture, Standard Excelon, 59230 Victoria Blue. Provide a VCT transition (color: black) to other flooring materials per manufacturer's recommendation.
   d. **Restroom(s): GS.**
   e. **Janitorial-Mechanical Room(s): GS.**
   f. **Carpet Schedule (office, test room and related areas):** Carpet tiles with base cove shall be installed throughout the entire office space except storage rooms, restrooms, common area lobbies, corridors, and exit areas. All carpet must be installed smoothly and evenly in accordance with manufacturer's instructions and *with the approved low Volatile Organic Compounds (VOC's) release adhesive*. **One (1) extra box of carpet tiles (for each Military Service at this location) shall be left in the security closet** (see paragraph K.2.n. for more details) **for future use.**

NAVY CARPET SCHEDULE	
Manufacturer / Style:	Shaw / U.S. Navy Recruiting Standard: # 800G3
Color (Name, Number):	Water Garden, 69400
Product:	Carpet Tile
Installation Method:	Monolithic (See Note #1)
Installation Adhesive:	"LokDots" Adhesive System
Note 1: Carpet tile installation to be installed monolithic with all arrows pointing in the left-direction upon walking into the entrance of the space.	
Note 2: If selected, for expedited delivery - government pricing contact: Shaw Contract for ALL inquiries go to website: **www.shawcontract.com/usrecruiting**. For pricing and order inquiries go to the pricing & orderin tab at the above website, or call: 1-800-356-7429 ext. 1 or email: **cs.gsa@shawinc.com**. For general inquiries call Michele Leise, 402-968-6025, email: **michele.leise@shawcontract.com**	

4. **Windows: GS.**
5. **Doors: GS.**
6. **Restroom Accessories and Miscellaneous: GS.**
7. **Miscellaneous:**
   a. **Exterior Windows / Doors: GS.**
   b. **Perforated Window Wraps: GS.**
   c. **Interior Windows / Doors: GS with guidance:** All interior windows in Navy space will be installed flush on top of the chair rail.
   d. **Mail Delivery: GS.**
   e. **Chair Rail: GS w/guidance:** To be installed in open office areas and individual offices only. See G.9.e for specifics.
   f. **Shelving: GS.**
   g. **Desktop:** NO desktop to be installed.
   h. **Countertop:** OPTIONAL - to be confirmed by USACE with HQ L1 (RS see Navy Section 8 guidance).

H. Signage:

1. **Exterior Signage:** Lessor to confirm whether sign is approved for use. Letters and Eagle to have a raised bevel (see sign graphic for details), with returns and raceway color to match building façade. White letters, eagle / anchor to be semi-translucent. If approved, the COE will provide an EPS file to the Lessor with appropriate sign design standards.

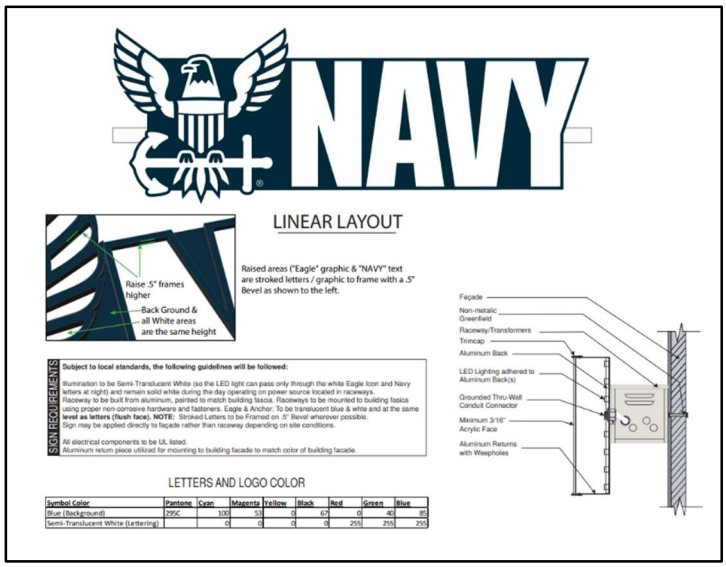

Symbol Color	Pantone	Cyan	Magenta	Yellow	Black	Red	Green	Blue
Blue (Background)	295C	100	53	0	67	0	40	85
Semi-Translucent White (Lettering)		0	0	0	0	255	255	255

2. **Individual Navy <u>Stand-Alone</u> Marquee / Pylon / Monument Signage:** White eagle/anchor and letters to be semi-translucent.

MONUMENT/PYLON SIGN

3. **Interior Signage: GS w/guidance:** The Lessor shall order / install the Navy's "Training Graphic" and "Honor, Courage, Commitment Graphic" below. Graphics to be centered vertically between the ceiling and chair rail and horizontally scaled to 65% - 70% of the length of the wall. Each graphic is to be made as <u>one-piece</u> with the size of the graphic not to exceed 4' H x 18' L. COE representative to supply the Navy's wall graphic files. Lessor will coordinate with the COE on the installation of these self-adhesive, vinyl graphics or where applicable, rough-surface applications. Materials and instructions for installation are as follows:
   - **a.** Apply graphics to a flat smooth finish wall surface (after Navy paint is applied).
   - **b.** Allow paint a minimum of 7-10 days drying time before applying any wall graphics. Drying times will vary based on temperature and humidity.
   - **c.** Navy' wall graphic shall be printed on and surface-applied to the self-adhesive vinyl. Printed Vinyl: 3M 180CV3-10 opaque white vinyl, surface ink jet printed with the Navy' graphics. Surface laminated with 3M 8520 UV resistant matte clear overlay.
   - **d.** Alternate manufacturers (e.g., Arlon, Avery, GSP, OraCal, LG or other) sign vinyl materials equivalent to 3M 180 Series, rated for high bond wall application, and with minimum outdoor use 5-year warranty may be provided based on contractor recommendation.
   - **e.** **Note 1:** Wall mounted fixtures such as thermostats, wall switches, emergency lighting, and light sensors, etc., should be placed free and clear of all Military Service accents walls and graphics.

f. If selected, for expedited delivery-government pricing contact:

Manufacturer: Fastsigns, Inc.
POC: Chip Fullerton – General Manager.
Phone: (901) 725-7446
Email: **81@fastsigns.com**

Model: 3M 180CV3-10 Opaque White Vinyl wall covering
Substrate: Equal to 3M 180CV3-10 Opaque White Vinyl wall covering or better.

Installation: Utilize manufacturers' recommended products in accordance with 3M 180CV3-10 Opaque White Vinyl wall covering installation instructions and surface preparation and adhesive guidelines. Clean the wall with a mixture of 70 percent isopropyl alcohol and 30 percent water. Do this two times. Cleaning with this mixture will increase adhesion on Low VOC paints. Lessor to install the graphics according to manufacturer' instructions in order to maintain their warranty requirements.

Graphics: a) "**Training Wall Graphic**" to be installed per approved floor plan / AE drawing:

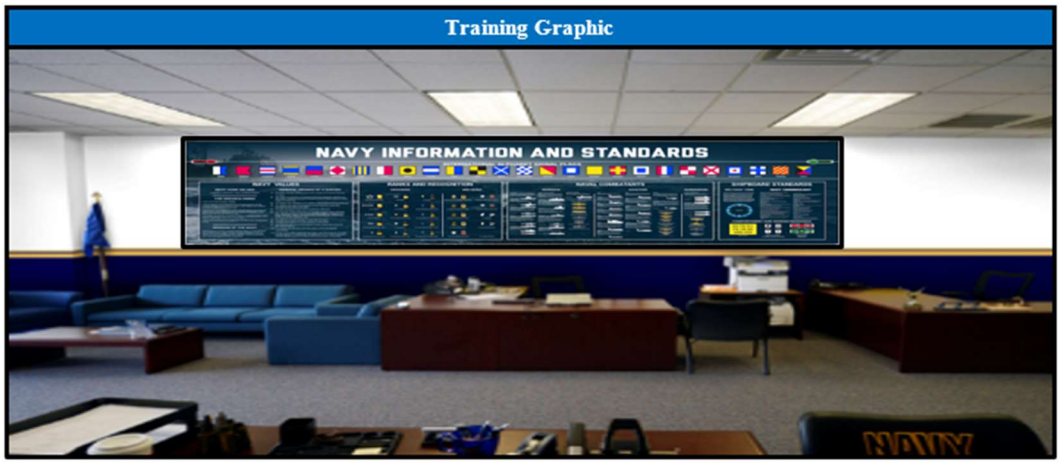

b) "**Honor, Courage, Commitment Wall Graphic**" to be installed per approved floor plan / AE drawing (opposite the Training Graphic):

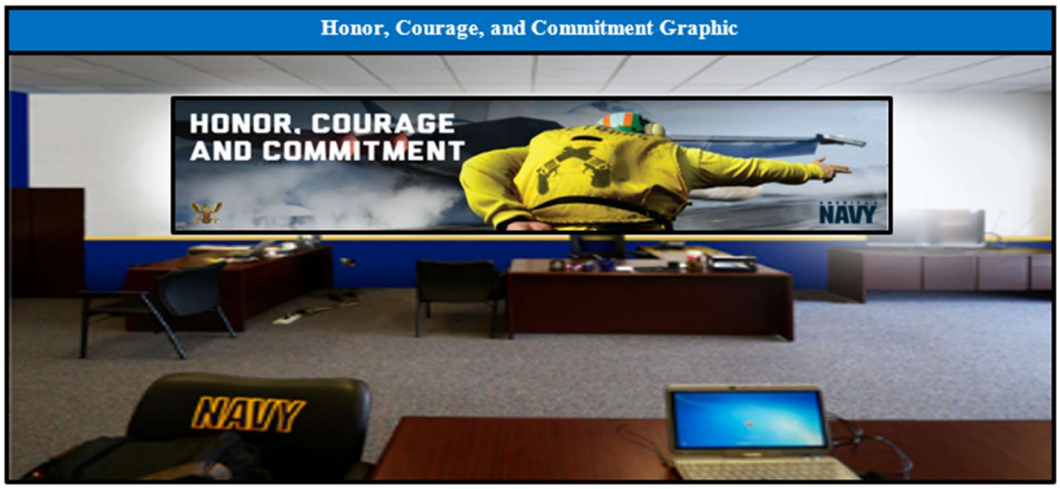

I. Parking: GS.
J. Landscaping: GS.
GENERAL NOTES: GS.

ATTACHMENT "3"

NOTE: Within Military Service specific attachments all General Standards (GS) will apply except where specifically differentiated.

MARINE CORPS SPECIFIC STANDARDS

A. General Guidance: Same as General Standard (GS).
B. Mechanical: GS.
C. Plumbing: GS.
D. Electrical: GS w/guidance:
  1. Electrical Distribution: GS.
  2. Interior Lighting: GS.
  3. Exterior Lighting: GS.
  4. Switches & Cover-Plates: Wall fixture switches and cover-plates to be Leviton Gray color or equivalent.
E. Communications: GS.
F. Safety and Fire Equipment: GS.
G. Architectural Finishes-Fixtures-Supplies:
  1. Ceilings:
  2. Walls: GS w/guidance:

MARINES CORPS PAINT SCHEDULE

Mfr:	Color Name:	Color #:	Product:	Coats:	Finish:	Area:
Sherwin Williams	PRIMER	ProMar 200 White (see Note 1)	B28W02600	2	Latex: Acrylic Primer	All Walls / All Painted Trim
Sherwin Williams	United States Marines Corps Recruiting Red	SW7586 Stolen Kiss	B20R2658	2	Latex: Eg-Shel	Walls
Sherwin Williams	United States Marines Corps Recruiting Blue	SW9177 Salty Dog	B20T2654	2	Latex: Eg-Shel	Walls
Sherwin Williams	United States Marines Corps Recruiting Khaki	SW6136 Harmonic Tan	B20W12651	2	Latex: Eg-Shel	Walls
Sherwin Williams	United States Marines Corps Recruiting White	SW7526 Maison Blanche	B20W12651	2	Latex: Eg-Shel	Walls
Sherwin Williams	United States Marines Corps Recruiting Gray	SW7645 Thunder Gray	B31T2654	2	Latex: Semi-Gloss	Trim

Note 1: ***ProMar 200 Primer to be tinted to match the applicable wall color for all walls, and all painted trim.***
Note 2: Paint schemes and accent wall finishes to be applied as referenced on the approved floor plan / AE drawing / finish schedule.
Note 3: United States Marines Corps Recruiting White to be applied in storage, test room and within MC controlled restrooms.
Note 4: For NCOIC offices, two walls to be Recruiting White, one wall to be Recruiting Khaki, and one wall to be Recruiting Blue **as identified on the approved floor plan / AE drawing**.
Note 5: If selected, contractor should request Sherwin Williams' colors as "United States Marines Corps Recruiting..." Formulas to these color names are available on Sherwin Williams' National Accounts Database.
Note 6: Restroom: See Common Area Paint Schedule.

3. Flooring:
  a. Porcelain Entry Tiles (Entrance-Front / Rear Exterior Exit Areas): GS - *see* ***ENCLOSURE #2.***
  b. Base Cove (for VCT & Carpet only): Johnsonite / Tarkett (**https://distributor.tarkett.com**), Rubber; Color: #40, Black, 4" H.
  c. Storage Areas: Vinyl composition tile (VCT) with base cove, shall be installed. Style and Color to be AHF / Armstrong Imperial Texture, Standard Excelon, 51811 Antique White. Provide a VCT transition (color: black) to other flooring materials per manufacturer's recommendation.
  d. Restroom(s): GS.

e. **Janitorial-Mechanical Room(s): GS.**

f. **Carpet Schedule (office, test room and related areas):** Carpet tiles with base cove shall be installed throughout the entire office space except storage rooms, restrooms, common area lobbies, corridors, and exit areas. All carpet must be installed smoothly and evenly in accordance with manufacturer's instructions and *with the approved low Volatile Organic Compounds (VOC's) release adhesive*. **One (1) extra box of carpet tiles (for each Military Service at this location) shall be left in the security closet** (see paragraph K.2. for more details) **for future use.**

MARINE CORPS CARPET SCHEDULE	
Manufacturer / Style:	Shaw / U. S. Marine Corps Recruiting Standard: # 710S4
Color (Name, Number):	Lead, 49500
Product:	Carpet Tile
Installation Method:	Monolithic
Installation Adhesive:	"LokDots" Adhesive System
Note: If selected, for expedited delivery - government pricing contact: Shaw Contract for ALL inquiries go to website: **www.shawcontract.com/usrecruiting**. For pricing and order inquiries go to the pricing & orderin tab at the above website, or call: 1-800-356-7429 ext. 1 or email: **cs.gsa@shawinc.com**. For general inquiries call Michele Leise, 402-968-6025, email: **michele.leise@shawcontract.com**	

4. **Windows: GS.**
5. **Doors: GS.**
6. **Restroom Accessories and Miscellaneous: GS.**
7. **Miscellaneous:**
   a. **Exterior Windows / Doors: GS.**
   b. **Perforated Window Wraps: GS.**
   c. **Interior Windows / Doors: GS.**
   d. **Mail Delivery: GS.**
   e. **Chair Rail:** NO chair rail to be installed.
   f. **Shelving: GS.**
   g. **Desktop:** NO desktop to be installed.
   h. **Interior Security Mirror:** If required, a convex or dome security mirror will be installed to provide visibility of the work station areas by the 'recruiter-in-charge.' Mounting height and location will be determined by on-site requirements. The Lessor will coordinate with the COE and the MC representative on its exact placement.

H. Signage:

1. **Exterior Signage:** Lessor to confirm approved sign for use. Channel letter returns and raceway color to match building façade. If approved, the COE will provide an EPS file to the Lessor with appropriate sign design standards.

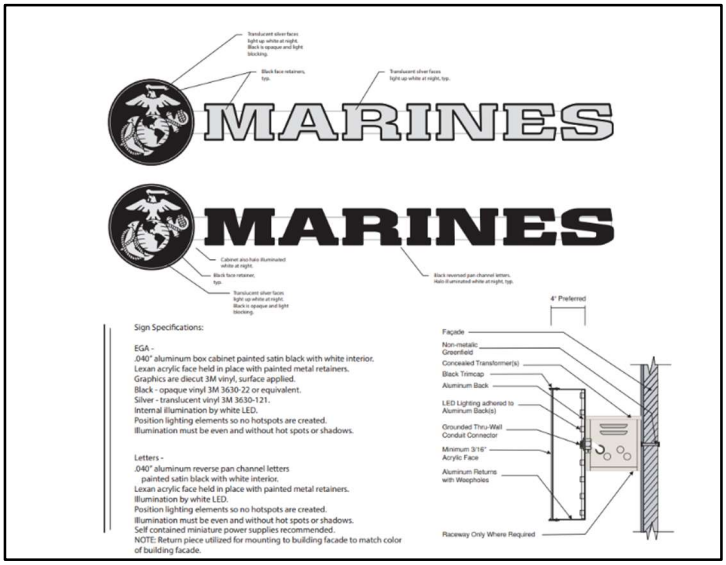

<u>EXHIBIT "A"</u>

2. **Individual Marine Corps <u>Stand-Alone</u> Marquee / Pylon / Monument Signage:**

<u>MONUMENT/PYLON SIGN</u>

3. **Interior Signage: GS.**
4. **Marine Corps Interior Wall Graphics:**
   - **a.** Location of wall graphics will be as referenced on the approved floor plan / AE drawing. See EXHIBIT "B" for design / installation elevations.
   - **b.** Lessor will coordinate with the COE on the installation of these ***self-adhesive, vinyl graphics or where applicable, rough-surface applications***. See instructions titled "Marine Corps Wall Graphics" **Exhibit "B"** for installation guidance.

EXHIBIT "B"

Marine Corps Wall Graphics

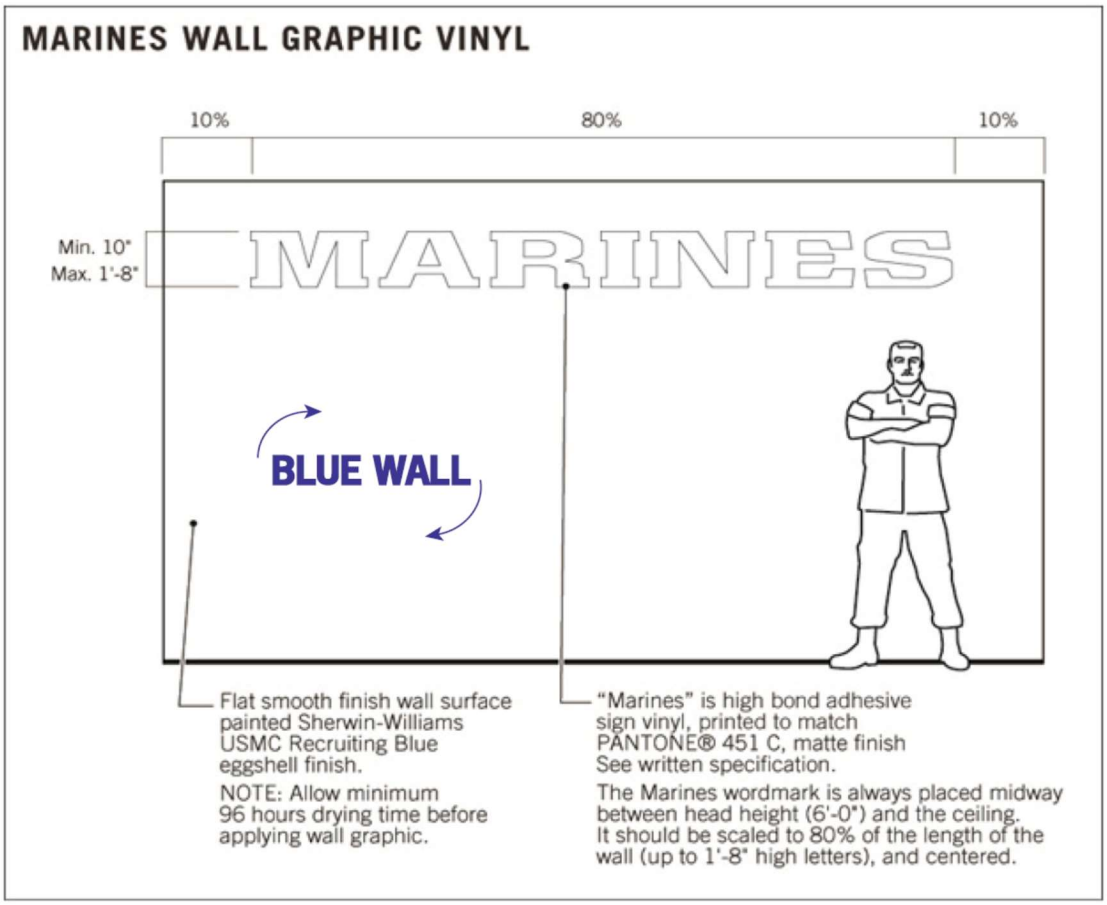

"MARINES" wall graphic is always placed on a large **BLUE WALL**. It is surface-applied, self-adhesive vinyl, color to PANTONE 451C, matte finish, a dark beige non-metallic color. Approved MARINES Wordmark Printed Vinyl: 3M 180CV3-10 opaque white vinyl, surface ink jet print to match PMS 451c (dark beige color) adjust as needed for accurate match to PMS 451. Surface laminated with 3M 8520 UV resistant matte clear overlay.

Alternate manufacturers (e.g., Arlon, Avery, GSP, OraCal, LG or other) sign vinyl materials equivalent to 3M 180 Series, rated for high bond wall application, and with minimum outdoor use 5-year warranty may be provided based on contractor recommendation. Alternate MARINES Wordmark Color Vinyl Recommendation: Arlon 2100-3670 Beige, matt finish opaque vinyl.

The "Marines" graphic is always placed midway between head height (6'-0") and the ceiling. It should be scaled to 80% of the length of the wall (up to 1'-8" H letters), and centered. The proportions of the provided "MARINES" artwork shall not be changed.

Note 1: Where length of walls exceed standards referenced above use Rule of Thumb: The letter height of the "MARINES" Wordmark should never grow so large that you can't leave clear space above and below "MARINES" equal to the height of the letters, as measured from the work station panels to the ceiling.
Note 2: Wall mounted fixtures such as thermostats, wall switches, light sensors, emergency lighting, etc., should be placed free and clear of all Military Service accents walls.

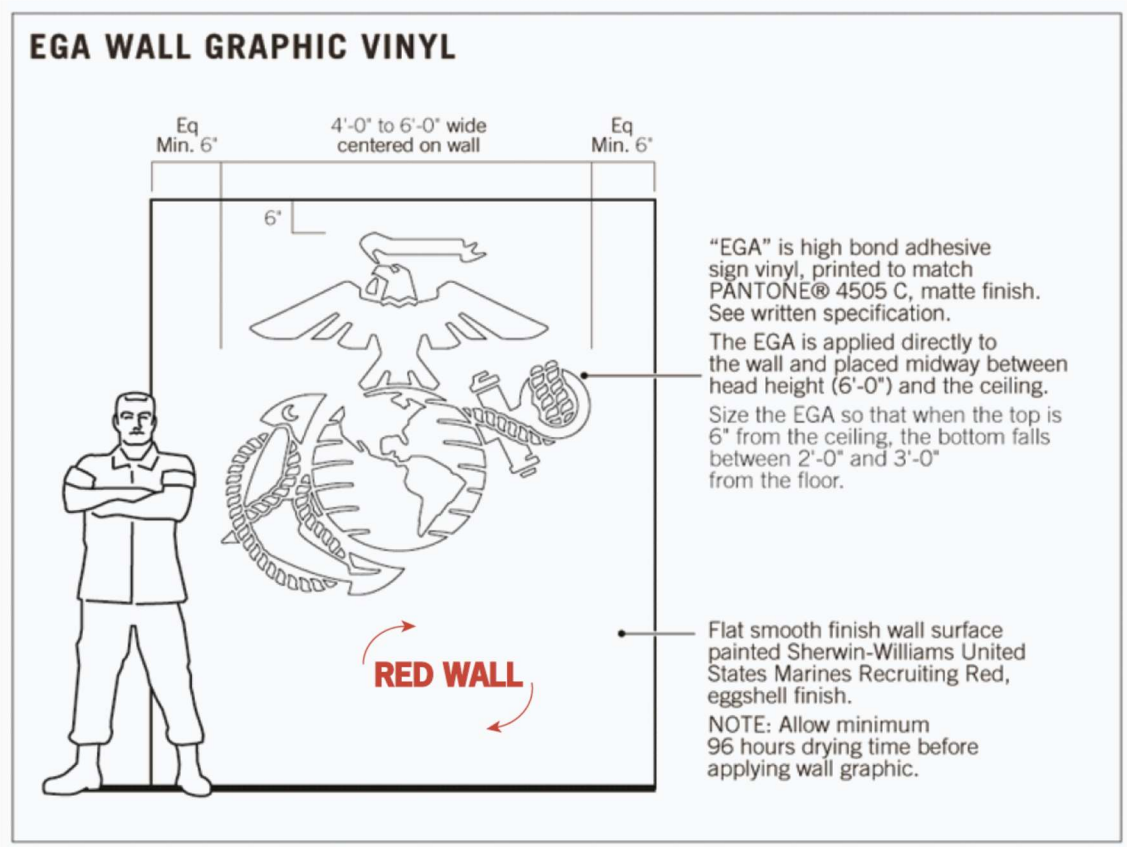

"EGA" wall graphic is always placed on a **RED WALL**. It is surface-applied, self-adhesive vinyl, color to match PMS 4505c, matte finish, a dark yellow non-metallic color. Approved EGA Symbol Printed Vinyl: 3M 180CV3-10 opaque white vinyl surface ink jet print to match PMS 4505c (dark yellow color) adjust as needed for accurate match to PMS 4505. Surface laminated with 3M 8520 UV resistant matte clear overlay.

Alternate manufacturers (e.g., Arlon, Avery, GSP, OraCal, LG or other) sign vinyl materials equivalent to 3M 180 Series, rated for high bond wall application, and the minimum outdoor use 5-year warranty may be provided based on contractor recommendation.

Alternate EGA Symbol Color Vinyl Recommendation: Arlon 2100-3669 Olive, matt finish opaque vinyl.

It is to be scaled as large as possible with the top of the EGA high on the wall. Generally, the bottom is no more 3'-0" above the floor. If placed on a large wall where no fixtures or furniture will block it, the EGA should be made larger with the bottom closer to the floor.

Note 1: Red and blue walls require a minimum of four days (96 hours) for complete curing and drying time before application of vinyl wall graphics can occur. Paint drying time will be extended in cool or cold climates. Graphics contractor is to be advised of this requirement.
Note 2: Wall mounted fixtures such as thermostats, wall switches, emergency lighting, and light sensors, etc., should be placed free and clear of all Military Service accents walls.

I. Parking: GS.
J. Landscaping: GS.
GENERAL NOTES: GS.

ATTACHMENT "4a"

NOTE: Within Military Service specific attachments all General Standards (GS) will apply except where specifically differentiated.

AIR FORCE "PRODUCTION OFFICES" SPECIFIC STANDARDS

A. General Guidance: Same as General Standard (GS).
B. Mechanical: GS.
C. Plumbing: GS.
D. Electrical: GS w/guidance:
  1. Outlets / faceplates: All other outlets / faceplates installed to be standard WHITE. Note: All outlets / faceplates shall match in color and be installed plumb to vertical and will be confirmed with a visual inspection during final walk-through. Electrical socket and faceplate are always to match in color.
E. Communications: GS w/guidance:
  1. Communications:
    a. Voice and Data Outlet Placements: All faceplates installed to be standard WHITE.
F. Safety and Fire Equipment: GS.
G. Architectural Finishes-Fixtures-Supplies:
  1. Ceilings: GS.
  2. Walls: GS w/guidance:

AIR FORCE PAINT SCHEDULE						
Mfr:	**Color Name:**	**Color #:**	**Product:**	**Coats:**	**Finish:**	**Area:**
Sherwin Williams	PRIMER	ProMar 200 White (see Note 1)	B28W02600	2	Latex: Acrylic Primer	All Walls / All Painted Trim
Sherwin Williams	United States Air Force Recruiting White	SW6259 Spatial White	B20W12651	2	Latex: Eg-Shel	Walls
Note 1: ***ProMar 200 Primer to be tinted to match the applicable wall color for all walls, and all painted trim.***						
Note 2: Paint schemes and wall finishes to be applied as referenced on the approved floor plan / AE drawing / finish schedule.						
Note 3: Restrooms: See Common Area Paint Schedule.						
Note 4: Storage Room Walls: to be United States Air Force Recruiting White.						
Note 5: If selected, contractor should request Sherwin Williams' colors as "United States Air Force Recruiting..." Formulas to these color names are available on Sherwin Williams' National Accounts Database.						

3. Flooring:
  a. Porcelain Entry Tiles (Entrance-Front / Rear Exterior Exit Areas): GS - *see* ***ENCLOSURE #2.***
  b. Base Cove (for VCT & Carpet only): Johnsonite / Tarkett (**https://distributor.tarkett.com**), Style-Perceptions; Profile-Recess; Product-Rubber; Color: #69 Sterling Silver, 4.25" H.
  c. Storage Areas: Vinyl composition tile (VCT) with base cove, shall be installed. Style and Color to be AHF / Armstrong Imperial Texture, Standard Excelon, 51915 Charcoal. Provide a VCT transition (color: black) to other flooring materials per manufacturer's recommendation.
  d. Restroom(s): GS.
  e. Janitorial-Mechanical Room(s): GS.
  f. Carpet Schedule (office, test room and related areas): Carpet tiles with base cove shall be installed throughout the entire office space except storage rooms, restrooms, common area lobbies, corridors, and exit areas. All carpet must be installed smoothly and evenly in accordance with manufacturer's instructions and *with the approved low Volatile Organic Compounds (VOC's) release adhesive*. **One (1) extra box of carpet tiles (for each Military Service at this location) shall be left in the security closet** (see paragraph K.2. for more details) **for future use.**

AIR FORCE CARPET SCHEDULE	
Manufacturer / Style:	Shaw / U. S. AF Recruiting Standard: #800C6
Color (Name, Number):	Ink, #49410
Product:	Carpet Tile
Installation Method:	Monolithic (See Note #1)
Installation Adhesive:	"LokDots" Adhesive System
Note 1: Carpet tile installation to be installed monolithic with all arrows pointing in the left-direction upon walking into the entrance of the space.	
Note 2: If selected, for expedited delivery - government pricing contact: Shaw Contract for ALL inquiries go to website: **www.shawcontract.com/usrecruiting**. For pricing and order inquiries go to the pricing & orderin tab at the above website, or call: 1-800-356-7429 ext. 1 or email: **cs.gsa@shawinc.com**. For general inquiries call Michele Leise, 402-968-6025, email: **michele.leise@shawcontract.com**	

4. **Windows: GS.**
5. **Doors: GS.**
6. **Restroom Accessories and Miscellaneous: GS.**
7. **Miscellaneous:**
   a. **Exterior Windows / Doors: GS.**
   b. **Perforated Window Wraps: GS.**
   c. **Interior Windows / Doors: GS.**
   d. **Mail Delivery: GS.**
   e. **Chair Rail: No chair rail**.
   f. **Shelving: GS.**
   g. **Desktop (built-in countertop): GS w/guidance:**
      1. Installation shall align top of desktop to bottom of char rail – top of desktop shall be installed at **30" AFF**.
      2. Desktop to be a minimum of 24" deep with rear grommets to provide power cord / wire access.
      3. Outlet and data ports centered under desktop as indicated on the approved floor plan / AE drawing.
      4. Desktop finish shall be plastic laminate, Formica #927 Folkstone, 58 Matte.
      5. Desktop shall be adequately supported by under-desktop support braces to prevent future sagging.
      6. **RS to see Section 8 guidance – Test Room and Desk Top Approvals**
   h. **Pantry (Wet or Dry) - OPTIONAL:** To be confirmed by USACE with HQ L1 (RS see Air Force Section 8 guidance).

H. Signage:

1. **Exterior Signage:** Lessor to confirm whether sign is approved for use. Channel letter returns and raceway color to match building façade. If approved, the COE will provide an EPS file to the Lessor with appropriate sign design standards.

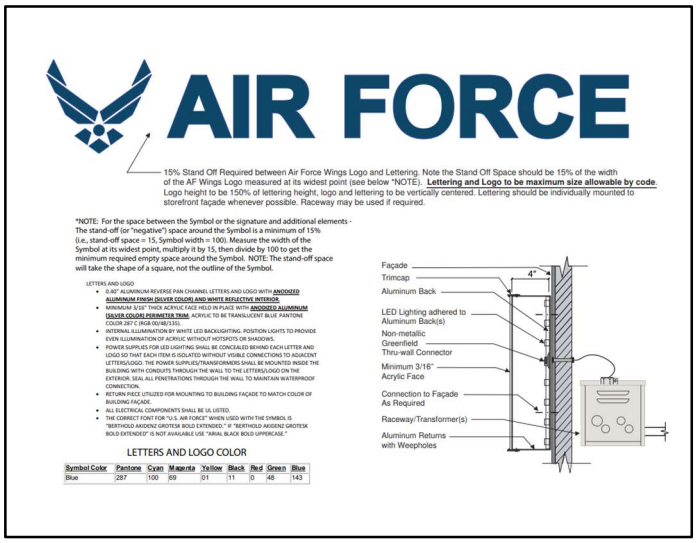

2. Individual Air Force <u>Stand-Alone</u> Marquee / Pylon / Monument Signage:

MONUMENT/PYLON SIGN

3. Interior Signage: GS.

I. Parking: GS.

J. Landscaping: GS.

K. Security Applications: Desk Stations

a. Only **one** desk station with two or less authorized personnel.

b. Only **two** desk stations with three or more authorized personnel.

GENERAL NOTES: GS.

ATTACHMENT "4b"

NOTE: Within Military Service specific attachments all General Standards (GS) will apply except where specifically differentiated.

AIR FORCE "HUB" OFFICES SPECIFIC STANDARDS

A. General Guidance: Same as General Standard (GS).

B. Mechanical: GS.

C. Plumbing: GS w/guidance:

1. **Wet-Pantry:** The wet-pantry shall contain the following fixtures:
   - **a.** Refrigerator with ice maker: appliances to be furnished / installed by U. S. Air Force.
   - **b.** Flexible water line to refrigerator icemaker with dedicated shutoff valve.
   - **c.** Stainless steel (SS), commercial grade single bowl sink, with a high arc SS faucet, separate sprayer with garbage disposal.
     Note: See paragraphs G.5.b., G.9.f. for more wet pantry details.

D. Electrical: GS w/guidance:

Unless otherwise specified, all outlets in the Open Office Area, Flight Chief Office, and Storage Rooms shall be quadplex. Outlets installed in the Interview, Test, Multi-Purpose / Conference Rooms, and Restrooms shall be duplex.

1. **Electrical Distribution:**
   - **a. Outlets, Switches and Faceplates:** All outlets / faceplates installed to be standard WHITE. Note: All outlets / faceplates shall match in color and be installed plumb to vertical and will be confirmed with a visual inspection during final walk-through. Electrical socket and faceplate are always to match in color.
   - **b. Security Closet & Communication (Commo) Boards for EACH Military Service: GS w/guidance:** Outlets to be centered underneath both commo board shelves – (see paragraph E for more details).
   - **c. Test room:** Electrical outlets and the data ports shall be installed below the desktop. Note: Grommets must be installed in the countertop to allow for wires to pass through (located against the wall, in the center of the desktop, directly above the electrical and data outlets.
   - **d. Multipurpose / Conference Room:**
     1. See paragraph D.1.e for electrical details.
     2. TVs / monitors power, communications and wire outlets and the center of the ½" thick plywood backing, flush to face of studs for the TV / monitor mounting bracket shall be set at 60" AFF and be located directly behind the specified TV / monitor location. See approved floor plan / AE drawing for wall call-out.
   - **e. Waiting Area-Storefront:** Shall have an individual duplex outlet located in the wall or ceiling where the Storefront LED Illuminated Information Display will be installed. If installed in floor, outlet shall be as close to window mullions as possible. Exact placement to be as referenced on approved floor plan / AE drawing. Outlet shall be controlled by an on / off switch.
   - **f. Open Recruiting Area:** In addition to standard wall receptacles, recessed floor boxes shall be provided as required; specific location as referenced on the approved floor plan / AE drawing. These boxes shall be used to provide electrical, voice / data feeds. Floor box model: Legrand RFB4 with brushed aluminum finish FloorPort Activation Covers; configured with two (2) duplex electrical outlets and two (2) duplex voice / data outlets.
2. **Interior Lighting:**
   - **a. Wall Logo Panel Lighting:** Two (2) flush-mounted wall-wash, directional LED fixtures shall be installed adjacent to the accent wall and the Air Force logo as referenced on the approved floor plan / AE drawing. As shown, in the logo panel lighting picture below, these fixtures are to be installed as close as possible to the center of each ceiling tile; at a distance recommended by at the manufacturer to best highlight the wall logo. **Note:** The COE representative will provide to the Lessor the approximate size and mounting height of wall logo to be illuminated.
     Manufacturer: Lucifer.

Model: Round, recessed, adjustable, dual-axis, LED down light:
http://www.luciferlighting.com/Products/Recessesed/DL2YP-LEDX
Fixture Number: DL2YP-LEDX.
Fixture Finish: White trim with specular diffuser.
Fixture Performance: Fully recessed, with internally adjustable lamp aiming. Shall be capable of at least 180º of horizontal adjustment and 35° of vertical adjustment.
Dimmer Switch: Full range dimmer compatible with fixture.
Power: 120V, 20 amp circuit.
Lamping: LED native lamping with separate driver module. Lamping shall be 2200 lumens minimum with a medium or narrow beam spread. *Note: Fixtures utilizing retrofit LED lamping or LED replacement lamps are prohibited.*
Color: Cool White.

Logo Panel Lighting

E. Communications: GS w/guidance:
1. Communications:
a. Voice and Data Outlet Placements: All other faceplates installed to be standard WHITE.
F. Safety and Fire Equipment: GS.
G. Architectural Finishes-Fixtures-Supplies:
1. Ceilings: GS.
2. Walls: GS w/guidance:
a. Wood Blocking: The Lessor will confirm the walls and exact locations for the installation of ½" plywood backing which will be utilized in the hanging of the heavy Air Force Logo display panel and the Airmen's Creed display panel **(Display Panels to be provided and installed by the Air Force.)** The wood blocking will be installed flushed to studding and be affixed to withstand a dead load of 50 pounds. If applicable, on existing walls, drywall is to be removed, blocking installed, and drywall replaced and repaired as required for the blocking installation. Horizontal blocking will be set to allow installation of the panels at vertical height of 6'-0" AFF. If an obstruction prevents the installation of the glass panels at 6'-0" AFF, the tolerance for installation is +/- 6".

1. **Air Force Logo Panel (located on accent wall):** This panel (to be installed by the Air Force) shall be 36" x 36", ⅜" thick tempered glass with a ⅛" bevel on both sides and (4) predrilled holes to accommodate 3/4" dia. anodized aluminum standoffs (shall protrude from wall 1" total). The panel is to be installed on the accent wall, centered horizontally and vertically, on the accent wall at 6'-0" AFF to center of the panel. The panel should **be spaced evenly between the LED wall wash lights. See subsequent elevations on drawing** sheets for examples and "Logo Panel Lighting" referenced above.
2. **Airman's Creed:** This panel (to be installed by the Air Force) shall be 25 ¾" W x 37 ¾" H, ⅜" thick tempered glass with a ⅛" bevel on both sides and (4) predrilled holes to accommodate ¾" dia. anodized aluminum standoffs (shall protrude from wall 1" total). The panel is to be installed on the wall perpendicular to the accent wall, centered horizontally, and vertically at 6'-0" AFF to center of the panel (see below). See examples of Air Force Logo wall and Airman's Creed wall below.

b. **Accent Wall:** Location as referenced on the approved floor plan / AE drawing and paint schedule. The accent wall shall be free of any wood-trim, outlets, lighting, switches, HVAC controls, fire safety equipment or any items that may detract from the visual integrity of the wall. If chair rail exists, it shall be removed.

AIR FORCE – HUB - PAINT SCHEDULE						
Mfr:	**Color Name:**	**Color #:**	**Product:**	**Coats:**	**Finish:**	**Area:**
Sherwin Williams	PRIMER	ProMar 200 White (see Note 1)	B28W02600	2	Latex: Acrylic Primer	All Walls / All Painted Trim
Sherwin Williams	United States Air Force Recruiting White	SW6259 Spatial White	B20W12651	2	Latex: Eg-Shel	Walls
Sherwin Williams	United States Air Force Recruiting Blue	SW 6811 Honorable Blue	B20T2654	2	Latex: Eg-Shel	Accent Wall

Note 1: ***ProMar 200 Primer to be tinted to match the applicable wall color for all walls, and all painted trim.***						
Note 2: Paint schemes, accent walls and wall finishes to be applied as referenced on the approved floor plan / AE drawing / finish schedule.						
Note 4: Walls in Open Office areas (except accent wall), storage rooms, restrooms (if AF controlled areas), Flight Chief Office, Test Room, Multi-Purpose Room & Interview Room, security closet and janitorial closets to be: United States Air Force Recruiting White.						
Note 5: Accent Wall shall be free of any wood-trim, outlets, lighting, switches, HVAC controls, fire safety equipment or any items that may detract from the visual integrity of the wall. If chair rail exists, it shall be removed. Entire wall to be painted accent wall color. Lessor to confirm location with COE. Color to be: United States Air Force Recruiting Blue.						
Note 6: Restrooms: See Common Area Paint Schedule.						
Note 7: Storage Room Walls: to be United States Air Force Recruiting White.						
Note 8: If selected, contractor should request Sherwin Williams' colors as "United States Air Force Recruiting..." Formulas to these color names are available on Sherwin Williams' National Accounts Database.						

c. **Porcelain Wainscot Wall Tile (Restrooms & Wet Pantry Areas):** Wall tiles shall be installed per ***ENCLOSURE #2***, ***including ordering instructions***, typical wainscot pattern, including tile, transitions, and grout designations

3. **Flooring:**
   a. **Porcelain Entry Tiles (Entrance-Front / Rear Exterior Exit Areas): GS w/guidance:** Entry tile is required for HUB offices. Porcelain tile with unpolished, non-slip surface shall be installed at the interior side of exterior entrance / exit doors. See ***ENCLOSURE #2***, ***including ordering instructions***, for a typical floor tile pattern, including tile color / name, grout color / name, and tile transition designations. Military Service facility front entrance tile area shall be approximately 4' L x 5' W (with one foot on each side of the door width), see approved floor plan / AE drawing where applicable.
   b. **Base Cove (for VCT and Carpet areas, along with Janitorial/Mechanical rooms):** Johnsonite / Tarkett (**https://distributor.tarkett.com**), Style-Perceptions; Profile-Recess; Product-Rubber; Color: #69 Sterling Silver, 4.25" H.
   c. **Storage Areas:** Vinyl composition tile (VCT) with base cove, shall be installed. Style and Color to be AHF / Armstrong Imperial Texture, Standard Excelon, 51915 Charcoal. Provide a VCT transition (color: black) to other flooring materials per manufacturer's recommendation.
   d. **Restroom(s): GS.**
   e. **Janitorial-Mechanical Room(s): GS.**
   f. **Carpet Schedule (open office, flight chief office, interview room, test room and multi-purpose room):** Carpet tiles with base cove shall be installed throughout the entire HUB office space except storage rooms, restrooms, common area lobbies, corridors, and exit areas. All carpet must be installed smoothly and evenly in accordance with manufacturer's instructions and *with the approved low Volatile Organic Compounds (VOC's) release adhesive*. **One (1) extra box of carpet tiles (for each Military Service at this location) shall be left in the security closet** (see paragraph K.2. for more details) **for future use.** See full carpet schedule details below:

AIR FORCE – HUB - CARPET SCHEDULE	
Manufacturer / Style:	Shaw / U. S. AF Recruiting Standard: #800C6
Color (Name, Number):	Ink, #49410
Product:	Carpet Tile
Installation Method:	Monolithic (See Note #1)
Installation Adhesive:	"LokDots" Adhesive System
Note 1: Carpet tile installation to be installed monolithic with all arrows pointing in the left-direction upon walking into the entrance of the space.	
Note 2: If selected, for expedited delivery - government pricing contact: Shaw Contract for ALL inquiries go to website: **www.shawcontract.com/usrecruiting**. For pricing and order inquiries go to the pricing & orderin tab at the above website, or call: 1-800-356-7429 ext. 1 or email: **cs.gsa@shawinc.com**. For general inquiries call Michele Leise, 402-968-6025, email: **michele.leise@shawcontract.com**	

4. **Windows: GS w/guidance:**
   a. **Flight Chief Office:** Shall have an integrated sidelight adjacent to the door which shall extend from floor to top of door frame and be 2'-0" W. Window mini-blinds shall be installed on the sidelight.
   b. **Test Room:** Shall have a 2-ganged 3'-0" W x 4'-0" H windows at a height of approximately 40" AFF. Mini-Blinds are not to be installed on this window. If ganged, in-wall windows cannot be installed, a single 3'-0'' W x 4'-0" H window shall be installed. Refer to the final approved floor plan / AE drawing for specific requirements.
   c. **Interview Room:** Shall have an integrated sidelight adjacent to the door which shall extend from floor to top of door frame and be 2'-0" W. No mini-blind shall be installed in this room.
   d. **Multi-Purpose Room:** Shall have an integrated sidelight adjacent to the door which shall extend from floor to top of door frame and be 2'-0" W. Window mini-blinds should be installed on the sidelight.
   e. **Sidelight General Note:** If room layouts do not allow for a sidelight, a maple veneered wood with full length glass door shall be installed. Door(s) to be stained to match: MinWax Red Chestnut #232.
5. **Doors: GS w/guidance:**
   a. **Interior:**
      1. Security closet door to be a pocket-door with heavy-duty track/hardware, make and finish to match interior doors and frames.
6. **Restroom Fixtures, Accessories and Miscellaneous: GS.**
7. **Miscellaneous:**
   a. **Wet Pantry:** Shall contain the following (see adjacent picture):
      1. Base and wall cabinets as referenced on the approved floor plan / AE drawing.
      2. Base and wall cabinets color: Formica #912-58, Storm (Matte).
      3. Counter tops are to be set at a standard height and depth (or as required) and contain:
         i. Stainless steel (SS), commercial grade single bowl sink, with a high arc (SS) faucet and separate manual sprayer.
         ii. Allocated area for Air Force installed 18 cu. Ft. refrigerator with a minimum 69" of vertical clearance and 36" of horizontal clearance. Lessor will confirm refrigerator location, electrical outlet, and icemaker requirements before submittal of construction documents. Lessor will provide for a flexible, water line connection, w*ith dedicated shutoff valve*, of at least 48" to allow refrigerator movement in and out from wall.
         iii. Minimum of 36" of counter top area required next to and in addition to the sink.
         iv. Counter tops color: Formica #927 Folkstone, 58 (Matte).
         v. A microwave shelf (for Air Force installed microwave) to be provided above the counter top area (not above sink), size of this shelf opening to be: 31" W x 18" H.
         vi. Electrical Outlets: A duplex outlet is required on the wall behind / in the microwave shelf area and also behind the refrigerator area.
         vii. Sink to have garbage disposal installed.

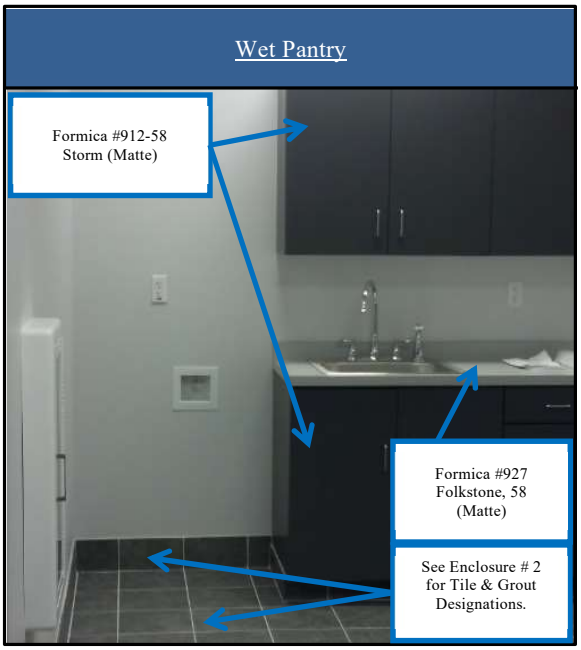

   b. **Exterior Windows / Doors: GS.**
   c. **Perforated Window Wraps: GS w/guidance:**
      1. **Air Force (Total Force) Stand-alone OR collocated with separate entrance doors: GS w/guidance:** The Air Force / Total Force Graphic image shown below is provided for reference purposes **ONLY**. This image will be included in a PDF "Style Guide" that the contractor **MUST** download with detailed instructions. The COE representative will provide a link and folder name for the contractor to download ALL of the appropriate files (PDF "Style Guide" and all others) necessary to install the Air Force / Total Force Graphic. The Air Force / Total Force graphic image

shall be put together with specified materials and look as close to the below image as possible. The black lines represent window / door mullions (see below):

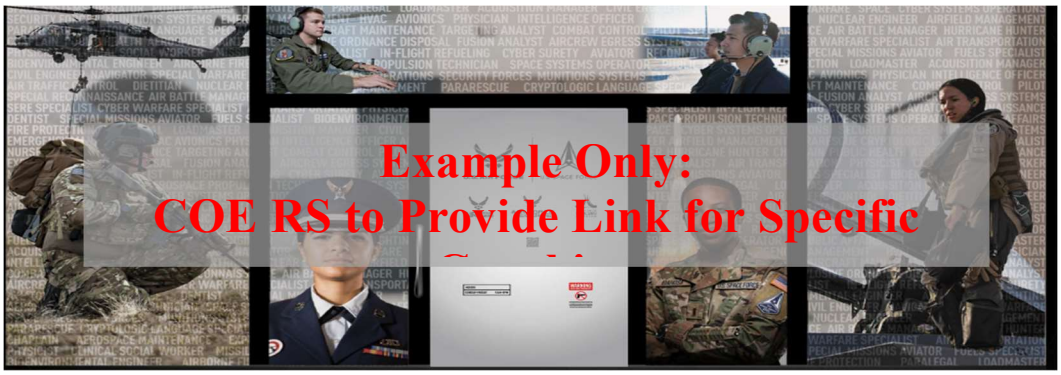

d. Interior Windows / Doors: GS.
e. Mail Delivery: GS.
f. Chair Rail: No Chair rail.
g. Shelving: GS.
h. Desktop (built-in for test room): GS w/guidance:
1. Installation shall align top of desktop to bottom of char rail – top of desktop shall be installed at 30" AFF.
2. Desktop to be a minimum of 24" deep with rear grommets to provide power cord / wire access.
3. Outlet and data ports centered under desktop as indicated on the approved floor plan / AE drawing.
4. Desktop finish shall be plastic laminate, Formica #927 Folkstone, 58 Matte.
5. Desktop shall be adequately supported by under-desktop support braces to prevent future sagging.
6. **RS to see Section 8 guidance – Test Room and Desk Approvals.**

H. Signage:

1. Exterior Signage:

a. Lessor to confirm whether sign is approved for use. Channel letter returns and raceway color to match building façade. If approved, the COE will provide an EPS file to the Lessor with appropriate sign design standards.

b. Exterior Building Signage: *The sign shall comply with local building code requirements and Lessor specific guidelines.* The sign shall include the words "**AIR FORCE**" with the logo symbol to the left side of the letters as indicated. Sign letters and Air Force symbol shall feature silver trim-caps and brushed aluminum returns with anodized finish. Letter height and width shall be as large as possible, based upon local building codes, storefront width, and leasing agreement. Spacing between the AF logo and Lettering must be compliant with the 15% stand-off space. Logo height to be 150% of lettering height, logo and lettering to be vertically centered. Final signage, letter height, symbol size and placement must conform to the Air Force brand standard design and must be approved by HQ AFRS designated personnel. Sign internal illumination shall be white LED backlit metal channel letters.
1. **Font:** Shall be "Berthold Akzidenz Grotesk Bold Extended".
2. **Material:** 040 aluminum reverse pan channel letters and logo with anodized **brushed aluminum** finish (silver color) and white reflective interior.
3. **Colors:** Acrylic letter faces shall adhere to the blue pantone color 287. Trim color to match anodized aluminum metal color of side channels.
4. **See the following sample signage (including specifications & color chart):**

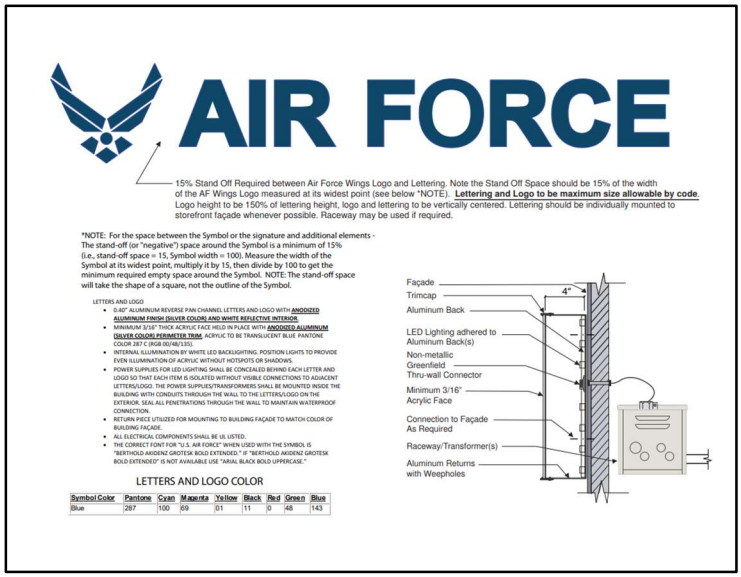

The sign shall have LED technology and be fabricated and installed in accordance with the referenced graphic and design standards. Note: The COE will provide an original EPS / large format file to the Lessor for sign fabrication. *The sign will be the maximum size allowed by code.* All signs will function by use of a 'dusk to dawn' light sensor. ***The Lessor shall ensure proper sign erection and electrical installation.*** See detailed information contained in the graphic below.

5. Sign supplier is required to provide shop drawings, specifications and a full color rendering of building exterior showing the signage to be supplied. The sign supplier shall also resubmit any signage documentation, including renderings, if the product submitted does not comply with these requirements. Signage shall not be built until a shop drawing has been approved by the AFRS designated personnel through the COE. Upon receipt of approval, the COE will provide an EPS format file to the Lessor for sign fabrication.

2. Individual Air Force Stand-Alone Marquee / Pylon / Monument Signage: Sign panels will read "AIR FORCE". If panel size permits, the Air Force logo symbol should be utilized to the left side of the letters.

MONUMENT/PYLON SIGN

3. Interior Signage: GS.

I. Parking: GS.

J. Landscaping: GS.

K. Security Applications: Desk Stations

a. Only **one** desk station with two or less authorized personnel.

b. Only **two** desk stations with three or more authorized personnel.

GENERAL NOTES: GS.

ATTACHMENT "5"

NOTE: Within Military Service specific attachments all General Standards (GS) will apply except where specifically differentiated.

AIR FORCE RESERVE SPECIFIC STANDARDS

A. General Guidance: Same as General Standard (GS).
B. Mechanical: GS.
C. Plumbing: GS.
D. Electrical: GS w/guidance:
1. **Outlets / faceplates:** Unless otherwise indicated, outlets / faceplates installed on walls with a chair rail shall be Leviton Gray if located below chair rail. Outlets / faceplates installed in areas without chair rail or installed above a chair rail are to be standard WHITE. Note: All outlets / faceplates shall be installed plumb to vertical and will be confirmed with a visual inspection during final walk-through.

E. Communications: GS w/guidance:
1. **Communications:**
   a. **Voice and Data Outlet Placements:** Data ports and faceplates installed on walls with chair rail shall be Leviton Gray if located below the chair rail. Data ports and faceplates installed in rooms without chair rail or installed above a chair rail are to be standard WHITE. Note: Data port / electrical socket and faceplate are always to match in color.

F. Safety and Fire Equipment: GS.
G. Architectural Finishes-Fixtures-Supplies:
1. **Ceilings: GS.**
2. **Walls: GS w/guidance:**

AIR FORCE RESERVE PAINT SCHEDULE

Mfr:	Color Name:	Color #:	Product:	Coats:	Finish:	Area:
Sherwin Williams	PRIMER	ProMar 200 White (see Note 1)	B28W02600	2	Latex: Acrylic Primer	All Walls / All Painted Trim
Sherwin Williams	United States Air Force Reserve Recruiting White	SW6259 Spatial White	B20W12651	2	Latex: Eg-Shel	Walls
Sherwin Williams	United States Air Force Reserve Recruiting Gray	SW9162 African Gray	B20W12651	2	Latex: Eg-Shel	Walls (below chair rail)
Sherwin Williams	United States Air Force Reserve Recruiting Blue	SW 6811 Honorable Blue	B20T2654	2	Latex: Eg-Shel	Accent Wall
Sherwin Williams	United States Air Force Reserve Recruiting Gray	SW9162 African Gray	B31W2651	2	Latex: Semi-Gloss	Trim & Chair Rail

Note 1: ***ProMar 200 Primer to be tinted to match the applicable wall color for all walls, and all painted trim.***

Note 2: Paint schemes, accent wall and chair rail finishes, to be applied as referenced on the approved floor plan / AE drawing / finish schedule.

Note 3: Accent wall to be: United States Air Force Reserve Recruiting Blue ***above*** chair rail and,
United States Air Force Reserve Recruiting Gray ***below*** the chair rail.

Note 4: Restrooms: See Common Area Paint Schedule.

Note 5: If selected, contractor should request Sherwin Williams' colors as "United States Air Force Reserve Recruiting..."
Formulas to these color names are available on Sherwin Williams' National Accounts Database.

3. **Flooring:**
   a. **Porcelain Entry Tiles (Entrance-Front / Rear Exterior Exit Areas):** GS - *see* ***ENCLOSURE #2.***
   b. **Base Cove (for VCT & Carpet only):** Johnsonite / Tarkett (**https://distributor.tarkett.com**), Style-Perceptions; Profile-Recess; Product-Rubber; Color: #69 Sterling Silver, 4.25" H.
   c. **Storage Areas:** Vinyl composition tile (VCT) with base cove, shall be installed. Style and Color to be AHF / Armstrong Imperial Texture, Standard Excelon, 51915 Charcoal. Provide a VCT transition (color: black) to other flooring materials per manufacturer's recommendation.
   d. **Restroom(s): GS.**
   e. **Janitorial-Mechanical Room(s): GS.**
   f. **Carpet Schedule (office, test room and related areas):** Carpet tiles with base cove shall be installed throughout the entire office space except storage rooms, restrooms, common area lobbies, corridors, and exit areas. All carpet must be installed smoothly and evenly in accordance with manufacturer's instructions and *with the approved low Volatile Organic Compounds (VOC's) release adhesive*. **One (1) extra box of carpet tiles (for each Military Service at this location) shall be left in the security closet** (see paragraph K.2. for more details) **for future use.**

AIR FORCE RESERVE CARPET SCHEDULE	
Manufacturer / Style:	Shaw / U. S. AF Reserve Recruiting Standard: #800C6
Color (Name, Number):	Ink, #49410
Product:	Carpet Tile
Installation Method:	Monolithic (See Note #1)
Installation Adhesive:	"LokDots" Adhesive System
Note 1: Carpet tile installation to be installed monolithic with all arrows pointing in the left-direction upon walking into the entrance of the space.	
Note 2: If selected, for expedited delivery - government pricing contact: Shaw Contract for ALL inquiries go to website: **www.shawcontract.com/usrecruiting**. For pricing and order inquiries go to the pricing & orderin tab at the above website, or call: 1-800-356-7429 ext. 1 or email: **cs.gsa@shawinc.com**. For general inquiries call Michele Leise, 402-968-6025, email: **michele.leise@shawcontract.com**	

4. **Windows: GS.**
5. **Doors: GS.**
6. **Restroom Accessories and Miscellaneous: GS.**
7. **Miscellaneous:**
   a. **Exterior Windows / Doors: GS.**
   b. **Perforated Window Wraps: GS.**
   c. **Interior Windows / Doors: GS.**
   d. **Mail Delivery: GS.**
   e. **Chair Rail: GS w/guidance: S**ee paint schedule, Note 3. Chair rail to be installed in all rooms, excluding the storage room. NOTE: For Test-Room only, align top of the desktop with the bottom of the chair rail. Bottom of chair rail to be installed approximately 30" AFF. Chair rail and wall areas under chair rail to be painted as referenced in Paint Schedule above. See G.9.e for specifics.
   f. **Shelving: GS.**
   g. **Desktop (built-in countertop):**
      1. Installation shall align top of desktop to bottom of char rail – top of desktop shall be installed at 30" AFF.
      2. Desktop to be a minimum of 24" deep with rear grommets to provide power cord / wire access.
      3. Outlet and data ports centered under desktop as indicated on the approved floor plan / AE drawing.
      4. Desktop finish shall be plastic laminate, Formica #927 Folkstone, 58 Matte.
      5. Desktop shall be adequately supported by under-desktop support braces to prevent future sagging.

H. Signage:

1. **Exterior Signage: GS w/guidance:** Lessor to confirm whether sign is approved for use. Channel letter returns and raceway color to match building façade. If approved, the COE will provide an EPS file to the Lessor with appropriate sign design standards.

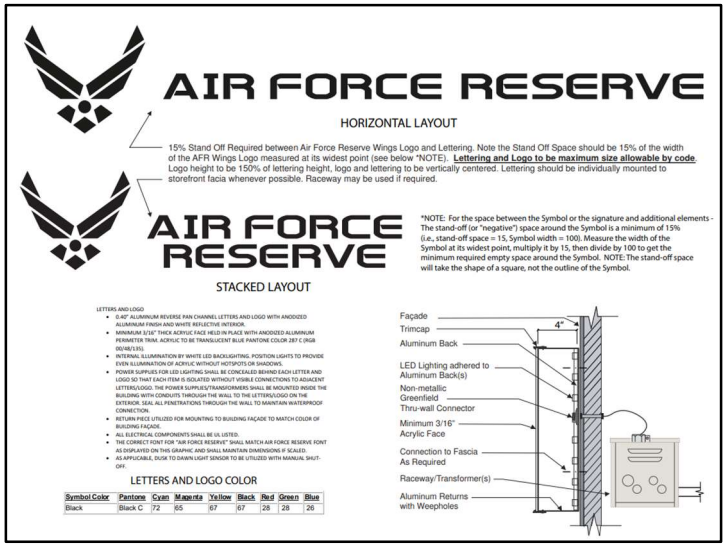

2. **Individual Air Force Reserve <u>Stand-Alone</u> Marquee / Pylon / Monument Signage:**

MONUMENT/PYLON SIGN

3. **Interior Signage: GS.**
4. **Air Force Reserve <u>Exterior</u> Door and Window Graphics: GS w/guidance:**
   This graphic does NOT take the place of a perforated window wrap on the exterior glass. It is for locations that don't have a perforated window wrap installed. As applicable, location of door and window graphics will be as referenced on the approved floor plan / AE drawing and as detailed on design elevations. Lessor will coordinate with the COE on the location of these ***self-adhesive, vinyl graphics.*** ***<u>IMPORTANT</u>:*** *these graphics are to be applied on exterior surface of glass - on interior doors.*

AIR FORCE RESERVE

Note: Graphic is surface applied self-adhesive vinyl. The COE will provide an EPS format file to the Lessor with appropriate graphic design standards.

I. Parking: GS.
J. Landscaping: GS.
GENERAL NOTES: GS.

ATTACHMENT "6"

NOTE: Within Military Service specific attachments all General Standards (GS) will apply except where specifically differentiated.

AIR NATIONAL GUARD (ANG) SPECIFIC STANDARDS

A. General Guidance: Same as General Standards (GS).
B. Mechanical: GS.
C. Plumbing: GS.
D. Electrical:
  1. Electrical Distribution: GS.
  2. Interior Lighting: GS.
E. Communications: GS.
F. Safety and Fire Equipment: GS.
G. Architectural Finishes-Fixtures-Supplies:
  1. Ceiling: GS.
  2. Walls: GS w/guidance:

AIR NATIONAL GUARD PAINT SCHEDULE						
Mfr:	**Color Name:**	**Color #:**	**Product:**	**Coats:**	**Finish:**	**Area:**
Sherwin Williams	PRIMER	ProMar 200 White (see Note 1)	B28W02600	2	Latex: Acrylic Primer	All Walls / All Painted Trim
Sherwin Williams	United States Air National Guard Recruiting Gray	SW 7643 Pussywillow	B20W12651	2	Latex: Eg-Shel	Walls
Sherwin Williams	United States Air National Guard Recruiting Blue	SW 6966 Blueblood	B20T2654	2	Latex: Eg-Shel	Accent Wall
Sherwin Williams	United States Air National Guard Recruiting White	SW 7006 Extra White	B31W2651	2	Latex: Semi-Gloss	Trim
Note 1: ***ProMar 200 Primer to be tinted to match the applicable wall color for all walls, and all painted trim.***						
Note 2: Paint schemes and accent wall finishes to be applied as referenced on the approved floor plan / AE drawing / finish schedule.						
Note 3: Restrooms: See Common Area Paint Schedule.						
Note 4: If selected, contractor should request Sherwin Williams' colors as "United States Air National Guard Recruiting..." Formulas to these color names are available on Sherwin Williams' National Accounts Database.						

3. Flooring: GS w/guidance:
  a. Reception-Hallway-Common Area-Exit Areas (as designated on the approved floor plan / AE drawing): Luxury Vinyl Tile (LVT) flooring shall be installed. **Manufacturer:** Tarkett; **Series**: Contour – CP (Contour Plank); **Reference #:** 251127122; **Pattern Type (Color / Style):** Natural Walnut PCWT Allegheny 4601 (Matte); **Surface Texture / Treatment:** Techtonic; **Edge Treatment:** SE (square edge); **Size:** 6" x 36". Provide a LVT transition (color: black) to other flooring materials per manufacturer's recommendation. For pricing **[National Pricing Number (NPN) is 1139798]**, ordering and general inquiries contact Tarkett USA at: 1) PRIMARY - Andy Crabb, 641-529-7023, **andy.crabb@tarkett.com**; 2) SECONDARY - Andy Schaeffel, 440-903-4634, **andy.schaeffel@tarkett.com**.
  b. Base Cove: Johnsonite / Tarkett (**https://distributor.tarkett.com**), Rubber; Color: #40, Black, 4" H.
  c. Storage Areas: Vinyl composition tile (VCT) with base cove, shall be installed in storage areas. Color to be AHF / Armstrong Imperial Texture, Standard Excelon, 51899 Cool White. Provide a VCT transition (color: black) to other flooring materials per manufacturer's recommendation.

d. **Restroom(s): GS.**
e. **Janitorial-Mechanical room(s): GS.**
f. **<u>Carpet Schedule (individual offices, test room and conference room Areas)</u>:** Carpet tiles with base cove shall be installed throughout the entire office space except storage rooms, restrooms, common area lobbies, corridors, and exit areas. All carpet must be installed smoothly and evenly in accordance with manufacturer's instructions and *with the approved low Volatile Organic Compounds (VOC's) release adhesive*. **One (1) extra box of carpet tiles (for each Military Service at this location) shall be left in the security closet** (see paragraph K.2. for more details) **for future use.**

AIR NATIONAL GUARD CARPET SCHEDULE	
Manufacturer / Style:	Shaw / U.S. Air National Guard Recruiting Standard: # 802B9
Color (Name, Number):	Ink, 13496
Product:	Carpet Tile
Installation Method:	Monolithic
Installation Adhesive:	"LokDots" Adhesive System
Note: If selected, for expedited delivery - government pricing contact: Shaw Contract for ALL inquiries go to website: **www.shawcontract.com/usrecruiting**. For pricing and order inquiries go to the pricing & orderin tab at the above website, or call: 1-800-356-7429 ext. 1 or email: **cs.gsa@shawinc.com**. For general inquiries call Michele Leise, 402-968-6025, email: **michele.leise@shawcontract.com**	

4. **Windows: GS.**
5. **Doors: GS.**
6. **Restroom Accessories and Miscellaneous: GS.**
7. **Miscellaneous:**
   a. **Exterior Windows / Doors: GS.**
   b. **Perforated Window Wraps: GS.**
   c. **Interior Windows / Doors: GS.**
   d. **Mail Delivery: GS.**
   e. **Chair Rail:** NO chair rail to be installed.
   f. **Shelving: GS.**
   g. **Desktop: GS.**

H. **Signage:**
1. **Exterior Signage:** Lessor to confirm approved sign for use. Upon approval, the COE will provide an EPS file to the Lessor with appropriate sign design standards. Box Signage (Stand-Alone Location) – Stacked (Preferred) & Linear / Horizontal (Alternate) Versions:

Channel Letter LED (Stand-Alone Location) – Stacked (Preferred) & Linear / Horizontal (Alternate) Versions. Channel letter returns and raceway color to match building façade:

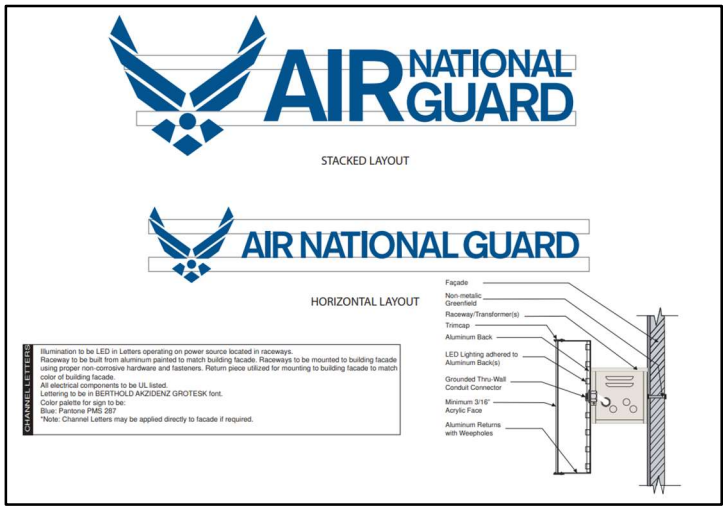

2. **Individual Air National Guard <u>Stand-Alone</u> Marquee / Pylon / Monument Signage (text can be stacked the same as the above cabinet / box sign):**

MONUMENT/PYLON SIGN

3. **Interior Signage and Wall Graphics:**
The Air National Guard's "Wordmark" wall graphic. This will be installed during buildout after paint has been applied. The **blue accent wall** should be as designated on the approved floor plan / AE drawing.

The ANG Wordmark wall graphic is always placed on a painted **blue wall**. It is surface-applied, self-adhesive vinyl, color to match PMS 11-4001 TCX, Brilliant White, matte finish. Approved ANG Wordmark printed vinyl: 3M 180CV3-10 opaque white vinyl surface ink jet print to match PMS 11-4001 TCX, Brilliant White, and adjust as needed for accurate match. Surface laminated with 3M 8520 UV resistant matte clear overlay. Alternate manufacturers (e.g., Arlon, Avery, GSP, OraCal, LG or other) sign vinyl materials equivalent to 3M 180 Series, rated for high bond wall application, and the minimum use 5-year warranty may be provided based on contractor recommendation.

Wordmark is to be scaled as large as possible with the top of the Wordmark high on the wall, but at least 2'-0" from the ceiling. Generally, the bottom is at least **4'-0" AFF**.

Note 1: The painted **blue wall** requires a minimum of four days (96 hours) for complete curing and drying time before application of vinyl wall graphics can occur. Paint drying time will need to be extended in cool or cold climates. Graphics contractor is to be advised of this requirement.
Note 2: Wall mounted fixtures such as thermostats, wall switches, emergency lighting, and light sensors, etc., should be placed free and clear of all Military Service accents walls.
Note 3: If Wordmark is installed on a painted white wall, the Wordmark should have blue wings and text, and no background (wings and text are individual pieces of the vinyl logo). It is surface-applied, self-adhesive vinyl, color to match PMS 287, matte finish, a darker blue non-metallic color. Approved ANG Wordmark printed vinyl: 3M 180CV3-10 opaque white vinyl surface ink jet print to match PMS 287 (a darker blue non-metallic color) adjust as needed for accurate match to PMS 287.

ANG Wordmark Interior Wall Graphic Options (blue color represents the blue accent wall) – Stacked (Preferred) & Linear / Horizontal (Alternate) Versions:

AIR NATIONAL GUARD – SIGNAGE & GRAPHIC COLOR DESIGNATIONS					
	RGB Example: 0, 82, 143	RGB Example: 0, 0, 0	RGB Example: 143,143,140	RGB Example: 166, 166, 168	RGB Example: 237, 241, 255
PMS Colors	**PMS** 287	**PMS** Black	**PMS** Silver 877c	**PMS** Cool Grey 7	**PMS** 11-4001 TCX Brilliant White
CMYK Colors	**C** 100 **M** 69 **Y** 01 **K** 11	**C** 0 **M** 0 **Y** 0 **K** 100	**C** 38 **M** 27 **Y** 26 **K** 9	**C** 0 **M** 0 **Y** 0 **K** 50	**C** 7 **M** 5 **Y** 0 **K** 0
RGB Colors	**RGB** 0, 82, 143	**RGB** 0, 0, 0	**RGB** 143, 143, 140	**RGB** 166, 166, 168	**RGB** 237, 241, 255
HEX Colors	**HEX** 00528f	**HEX** 000000	**HEX** 8c9091	**HEX** a6a6a8	**HEX** EDF1FF

I. Parking: GS.
J. Landscaping: GS.
GENERAL NOTES: GS.

ATTACHMENT "7"

NOTE: Within Military Service specific attachments all General Standards (GS) will apply except where specifically differentiated.

ARMY NATIONAL GUARD (ARNG) SPECIFIC STANDARDS

A. General Guidance: Same as General Standard (GS).
B. Mechanical: GS.
C. Plumbing: GS.
D. Electrical: GS.
E. Communications: GS.
F. Safety and Fire Equipment: GS.
G. Architectural Finishes-Fixtures-Supplies:
  1. Ceilings: GS.
  2. Walls: GS w/guidance:

ARMY NATIONAL GUARD PAINT SCHEDULE						
Mfr:	**Color Name:**	**Color #:**	**Product:**	**Coats:**	**Finish:**	**Area:**
Sherwin Williams	PRIMER	ProMar 200 White (see Note 1)	B28W02600	2	Latex: Acrylic Primer	All Walls / All Painted Trim
Sherwin Williams	United States Army National Guard Recruiting Green	SW 6166 Eclipse	B20T2654	2	Latex: Eg-Shel	Accent Wall
Sherwin Williams	United States Army National Guard Recruiting White	SW 7637 Oyster White	B20W12651	2	Latex: Eg-Shel	Walls
Sherwin Williams	United States Army National Guard Recruiting Khaki	SW 7638 Jogging Path	B31W2651	2	Latex: Semi-Gloss	Trim
Note 1: ***ProMar 200 Primer to be tinted to match the applicable wall color for all walls, and all painted trim.***						
Note 2: Paint schemes and accent wall finishes to be applied as referenced on the approved floor plan / AE drawing / finish schedule.						
Note 3: Restrooms: See Common Area Paint Schedule.						
Note 4: If selected, contractor should request Sherwin Williams' colors as "United States Army National Guard Recruiting..." Formulas to these color names are available on Sherwin Williams' National Accounts Database.						

3. Flooring: GS w/guidance:
  a. Reception-Hallway-Common Area-Exit Areas (as designated on the approved floor plan / AE drawing): Luxury Vinyl Tile (LVT) flooring shall be installed. **Manufacturer:** Tarkett; **Series**: Contour – CP (Contour Plank); **Reference #**: 251127122; **Pattern Type (Color / Style):** Natural Walnut PCWT Allegheny 4601 (Matte); **Surface Texture / Treatment:** Techtonic; **Edge Treatment:** SE (square edge); **Size:** 6" x 36". Provide a LVT transition (color: black) to other flooring materials per manufacturer's recommendation. For pricing **[National Pricing Number (NPN) is 1139798]**, ordering and general inquiries contact Tarkett USA at: 1) PRIMARY - Andy Crabb, 641-529-7023, **andy.crabb@tarkett.com**; 2) SECONDARY - Andy Schaeffel, 440-903-4634, **andy.schaeffel@tarkett.com**.
  b. Base Cove: Johnsonite / Tarkett (**https://distributor.tarkett.com**), Rubber; Color: #40, Black, 4" H.
  c. Storage Areas: Vinyl composition tile (VCT) with base cove, shall be installed in storage areas. Color to be AHF / Armstrong Imperial Texture, Standard Excelon, 51899 Cool White. Provide a VCT transition (color: black) to other flooring materials per manufacturer's recommendation.

d. **Restroom(s): GS.**
e. **Janitorial-Mechanical Room(s): GS.**
f. **Carpet Schedule (individual offices, test room and conference room areas):** Carpet tiles with base cove shall be installed throughout the entire office space except storage rooms, restrooms, common area lobbies, corridors, and exit areas. All carpet must be installed smoothly and evenly in accordance with manufacturer's instructions and *with the approved low Volatile Organic Compounds (VOC's) release adhesive*. **One (1) extra box of carpet tiles (for each Military Service at this location) shall be left in the security closet** (see paragraph K.2. for more details) **for future use.**

ARMY NATIONAL GUARD CARPET SCHEDULE	
Manufacturer / Style:	Shaw / U. S. Army National Guard Recruiting Standard: # 800J5
Color (Name, Number):	Pottery, 62755
Product:	Carpet Tile
Installation Method:	Monolithic
Installation Adhesive:	"LokDots" Adhesive System
Note: If selected, for expedited delivery - government pricing contact: Shaw Contract for ALL inquiries go to website: **www.shawcontract.com/usrecruiting**. For pricing and order inquiries go to the pricing & orderin tab at the above website, or call: 1-800-356-7429 ext. 1 or email: **cs.gsa@shawinc.com**. For general inquiries call Michele Leise, 402-968-6025, email: **michele.leise@shawcontract.com**	

4. **Windows: GS.**
5. **Doors: GS.**
6. **Restroom Accessories and Miscellaneous: GS.**
7. **Miscellaneous:**
   a. **Exterior Windows / Doors: GS.**
   b. **Perforated Window Wraps: GS.**
   c. **Interior Windows / Doors: GS.**
   d. **Mail Delivery: GS.**
   e. **Chair Rail:** NO chair rail to be installed.
   f. **Shelving:** NO shelving to be installed.
   g. **Desktop:** NO desktop to be installed.

H. **Signage:**
1. **Exterior signage:** Lessor to confirm approved sign for use. Channel letter returns and raceway color to match building façade. Upon approval, the COE will provide an EPS file to the Lessor with appropriate sign design standards. The words "INDIANA" or "GUAM" in the sign examples below to be changed to the appropriate State in which the recruiting office is located. Other graphics are available for the Army National Guard to choose from, below are only two examples. COE representative to provide appropriate graphic files to signage contractor similar to:

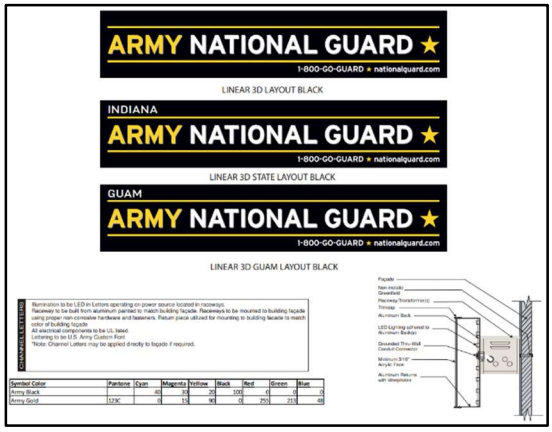

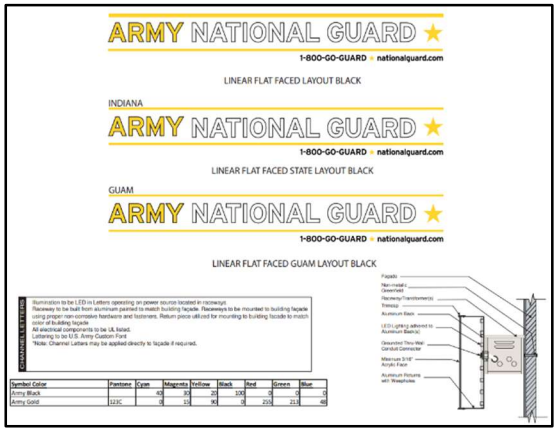

2. **Individual Army National Guard <u>Stand-Alone</u> Marquee / Pylon / Monument Signage:** "INDIANA" / "GUAM" to be changed to the appropriate State / Territory in which the recruiting office is located. Other graphics are available for the Army National Guard to choose from, below are only two examples. COE representative to provide appropriate graphic files to signage contractor:

MONUMENT/PYLON SIGN STROKED

MONUMENT/PYLON SIGN STATE EXAMPLE

3. **Interior Signage: GS.**

I. Parking: GS.

J. Landscaping: GS.

GENERAL NOTES: GS.