SAAF POWER DIAGRAM 10KV/400V

Entire Sheet Utility Provider up to Building Switchgear

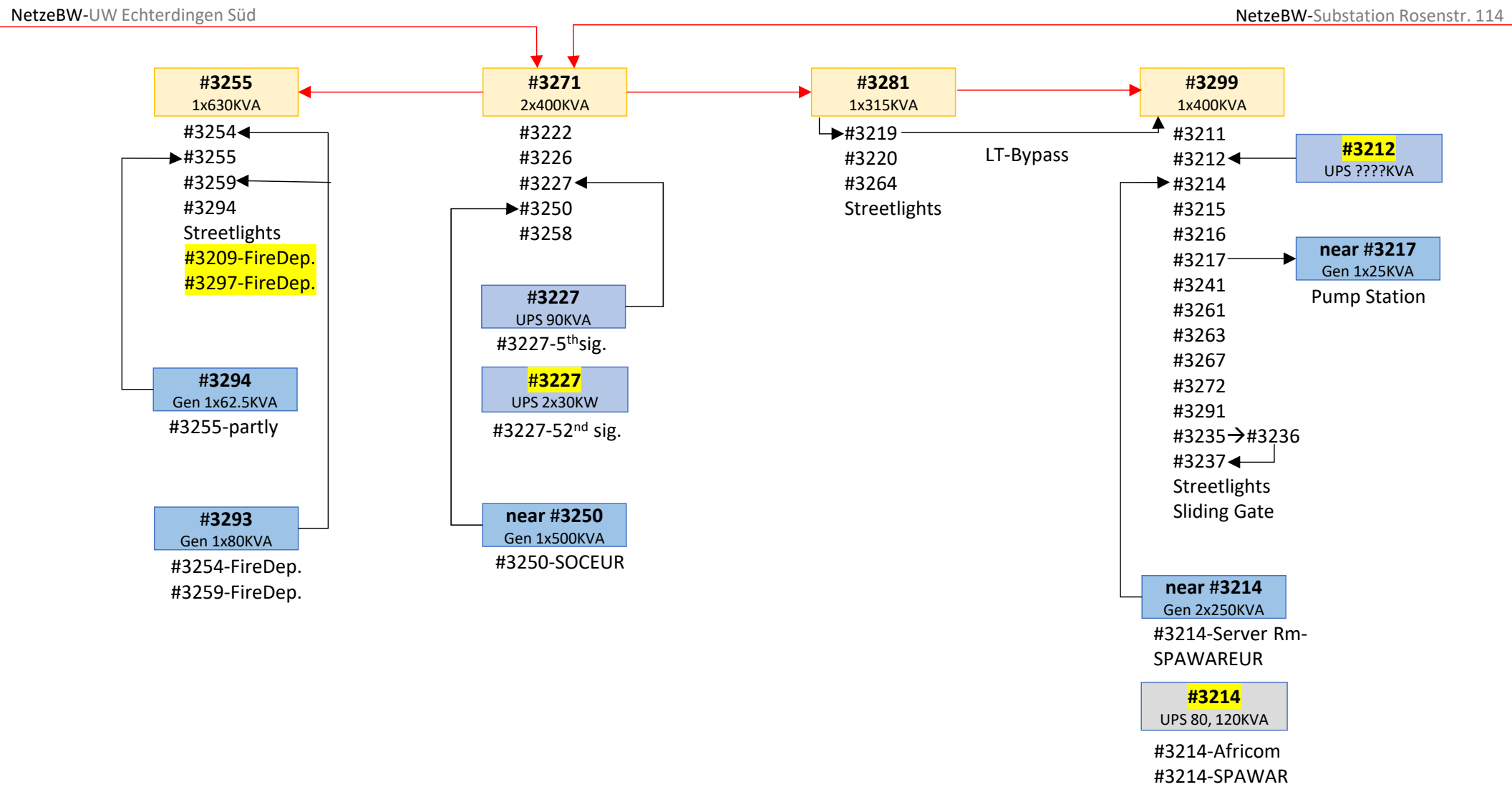

S.Longin 06/21/24	AVT	brown=OFF
	None US	Gen 400V
	Tran. Station	UPS 400V

Patch POWER DIAGRAM 10KV/400V/208V

#2456

2x Stut.Netze

Utility Provider Demarcation

#2362

#2316 (PP2)
4x2500KVA
Gen 2x2500KVA
UPS 4x2500KVA

#2301
#2302
#2304-only new AC
#2316
#2319-VTCC
#2358
#2383-2ndFeed
#Temp Container-
by 2317

#2363 (PP1)
2x2500KVA
Gen 2x2090KVA

#2302
#2303 #2304
#2307-BSMT(def.)
#2308 2ndFl. SCIF
#2314-50% #2315
#2368 #2375
#2381 #2383
#2398
Streetlights J-Mall

#2346
2x1250KVA
near #2346
Gen 2x1000KVA
#2324DIA

#2324
UPS 3x500KVA
#2324DIA

near #2216
Gen 2x220KVA
#2216-MILSTAR
Barrier to Sat Pad

#2457
1x630KVA
#2317 #2318
#2319 #2320
#2321 #2322

#2325
3x400,1x630KVA
#2305
#2399/Barrier
#2314-50%
#2323→ #2202
#2325 #2329
#2332-50%→ #2333
#2362 #2395
#2384 #2456
Husky field floodlights
Streetlights
Barrier to J-Mall
AVT-near Score Board
Voice Tower

#2214
1x630KVA
#2330 #2353

#2360
2x630KVA
#2301T
#2307 UPS 2307
#2308 #2309
#2310 #2311
#2312
#2313→#2306
#2332-50%
#2341-AVT #2343
#2349
#2349Spr.1
#2349Spr.2
#2386
Streetlights

#2372 (PP3)
1x630KVA
#2350

#2350
Gen 1x30KVA
#2350-
Cash Registry

#2363
???KVA
#2363
Freq.Con 60Hz
#2302 ???

#SatPad 2216
80KVA **50Hz**
MILSTAR

#2316
Freq.Con 60Hz
#2358

#2363
2x400KVA **50Hz**
#2302 #2303
#2315 #2375
#2383

#2302
UPS 1x160KVA
#2302
1x160KVA**50Hz**
#2302 4th fl. Server

#2393 (PP3)
NO
#2374 (PP3)
1x1600KVA
Gen 2x2090KVA
#2340 #2341
#2374
2x250KVA **60Hz**
#2340 #2341

#2212
1x630KVA
#2300
#2337
#2338→#2352
#2366
#2339
#2345
#2345-AVT
#2347
Florida fence lights
Streetlights

#2373
UPS 1x250KVA
#2340-RM107

#2339
Gen 1x150KVA
#2339-
Emerg. Equipment

Utility Provider Demarcation

#2390
???KVA
#2390

#2388
2x400KVA
#2388 #2389

#2218 2205
Stut.Net.
#2338-Stut.Netze. district heat

#Stut.Net

S.Longin 06/21/24	AVT	brown=OFF
	None US	Gen 400V
	Tran. Station	UPS 400V
	Switch station	UPS 208v

Patch OMA

Patch GFOQ /Stut.Netze POWER DIAGRAM 1/3 10KV/400V

Entire Sheet utility Provider up to Building Switchgear

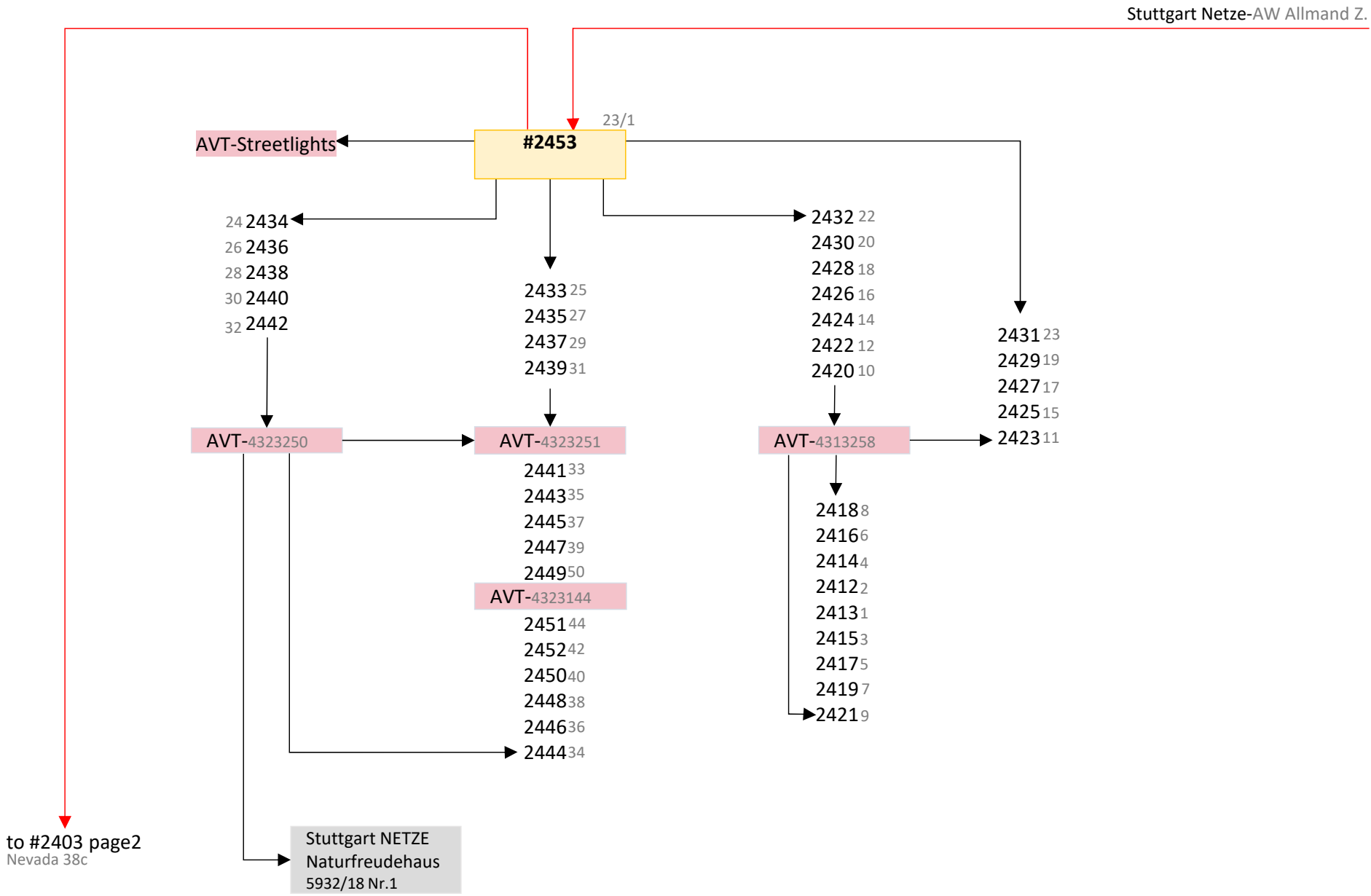

		brown=OFF
S.Longin	Tran. Station	AVT
06/21/24	Switch station	Not in Cont.

Patch AFH /Stut.Netze POWER DIAGRAM 2/3 10KV/400V

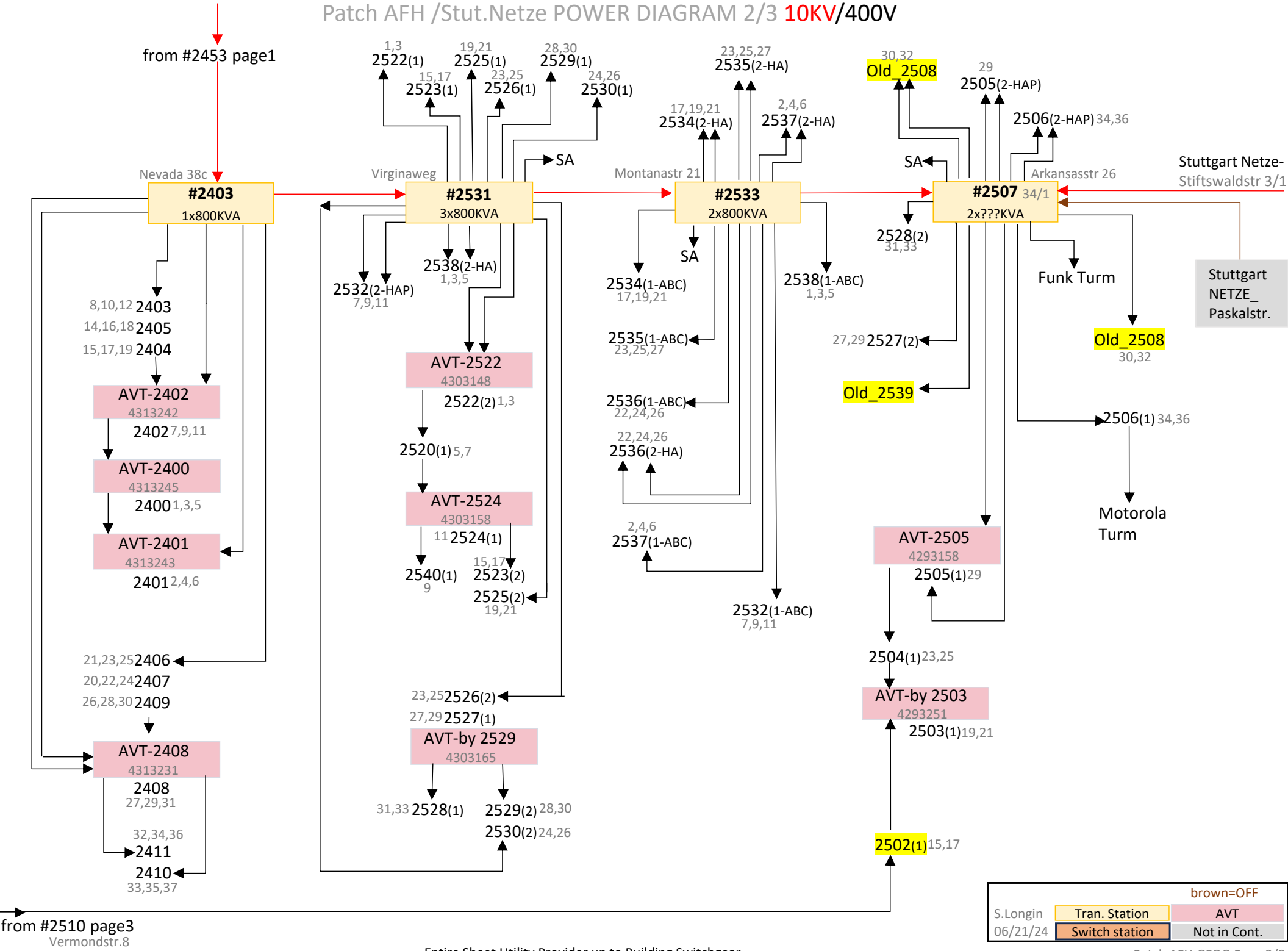

Patch AFH / Stut.Netze POWER DIAGRAM 3/3 10KV/400V

Entire Sheet Utility Provider up to Building Switchgear

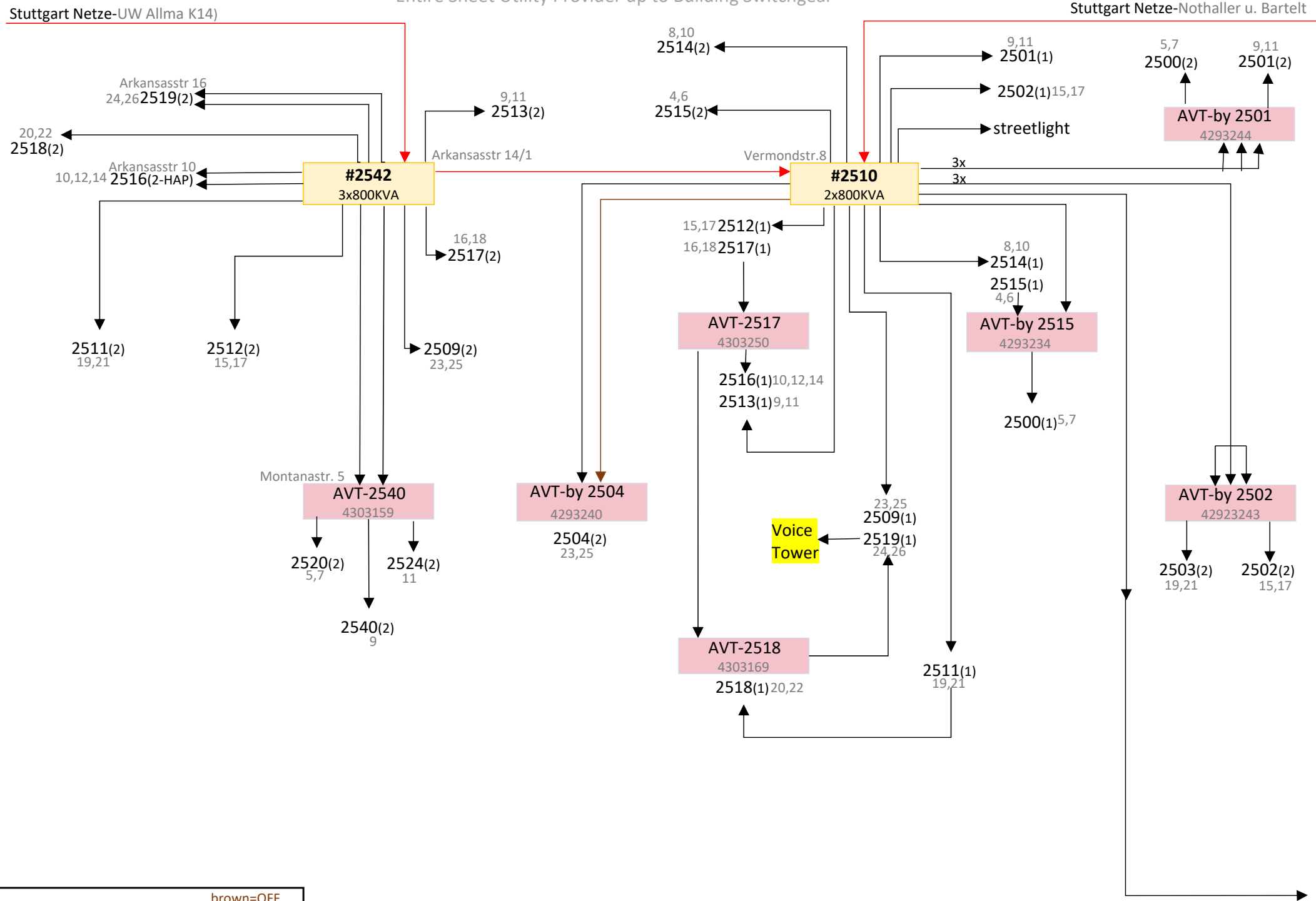

		brown=OFF
S.Longin	Tran. Station	AVT
06/21/24	Switch station	Not in Cont.

Kelley POWER DIAGRAM 10KV/400V/208V

Utility Provider Demarcation

2x Stut.Netze-UW Birkach 19

Utility Provider Demarcation

#3386 (MS2)
3x1000KVA

AVT-by#3300→#3300
#3302
#3366
#3367

#3344
#3301(1)&(TKS)
#3352
#3312
#3318→#3331
AVT-by#3344 →#3369
AVT-old Guard check(1)
AVT-old Guard check(2)
AVT-#3320 -#3319,woodshop
#3320-shops,new Africom
AVT-by#3374→#3375-Storage Util
#3372
#3374-Htg.Plant

#3313-old keller
#3301(2)
#3358
#3360-trash Area
#3319

#3301
Gen 1x250KVA
#3301- Emerg. Equipment

near #3318
Gen 1x40KVA
#3318-2ndFl. DPW

#3322
UPS 1x120KVA
#3322-???

#3322
#3325-Tankstelle
AVT-#3322
AVT-by#3316-Grünland
AVT-Cooperfield
AVT-#3326
AVT-Motorpool 1
AVT-Motorpool 2
Streetlights
AVT-#3392 →#3394
AVT-SCIF-by#3392
by#3392-USV-container Tent city

#3320-Brodway Cafe
#3369-???

#3370-trash Area
#3371/76-Haz.Waste
#3390-Wash Rack
#3393-Car Wash

von MS2

near #3364
Gen 1x400KVA
#3350
#3364
#3378 UPS 3378
#3392

3386/2 J-Tag Area
AVT-#3350
AVT-#3364
AVT-#3378 →#3391
AVT-#3392

3386/2
Tent Training Area-
110v Cont. for J-TAGS-
Sat Antenna-Conv.60hz-
FAB-T

near #3386
Gen 1x1000KVA
#3317

#3317
UPS 1x200KVA
#3317-???

3386/3
#3317

Sliding Gates

#3377 (MS1)
3x1000KVA

#3315-O
#3315-W
#3316 1st Fl. Commissary
#3316 2nd Fl. Africom
#3379-Generatorhaus

#3315
UPS 2x300KVA
#3315-???

#3379
Gen 1x216KVA
#3379
Transformator
#3315-STO Area

#3373
Gen 1x12,5KVA
#3316-1st Fl-Cash Registry

#3381 (MS3)
2x1000KVA

#3313
#3314 UPS 3314
#3314-Dining Fac.
#3395←#3396
#3397

#3396
Gen 1x150KVA
#3395 #3396
#3397

#3395
UPS 1x06KVA
#3395

#3396
UPS 1x60KVA
#3396

#3336 (MS5)
2x1000KVA

NO

#3385 (MS4)
3x1000KVA

#3324-Shopette
#3368-CDC
#3368-Sprinkler
#3326-Gym

#3326
Sprinkler Gen.
#3326-Sprinkler Pump

near #3385
Gen 1x1250KVA
UPS 3304
UPS 3304
UPS 3304
#3304-52SIG
#3304

#3307-BSMT-MDP-Server

#3307
UPS 1x180KVA
#3307-???

#3304-52SIG
#3304
#3305 UPS 3305
#3306-Netz UPS 3306
#3306-A/C
#3307-BSMT MDP-Server
#3307-EnBW Hzg.
#3307
#3308
#3309
#3310
#3353
#3362
#3363
Barrier-by #3307
Streetlights
Sewer Pumping Station

von MS4

#3363
Gen 1x125KVA

Sewer Pumping Station
1xKabel-???

S.Longin	AVT	brown=OFF
06/21/24	None US	Gen 400V
	Tran. Station	UPS 400V

Kelley OMA

Kelley AFH,GFOQ /Stut.Netze POWER DIAGRAM 10KV/400V

Entire Sheet is Utility Provider up to Building Switchgear

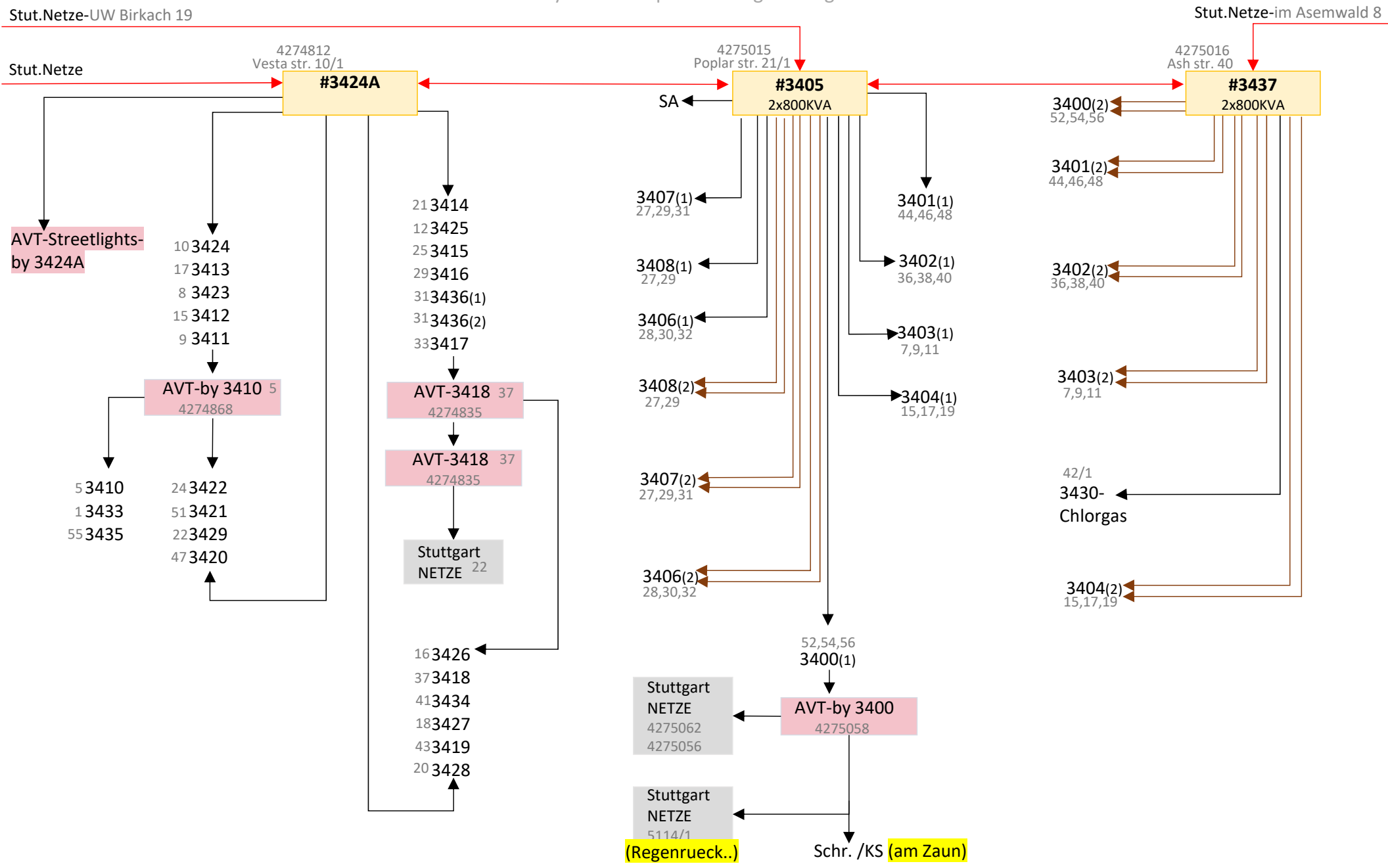

		brown=OFF
S.Longin	Tran. Station	AVT
06/21/24	Switch station	Not in Cont.

Robinson POWER DIAGRAM 10KV/400V

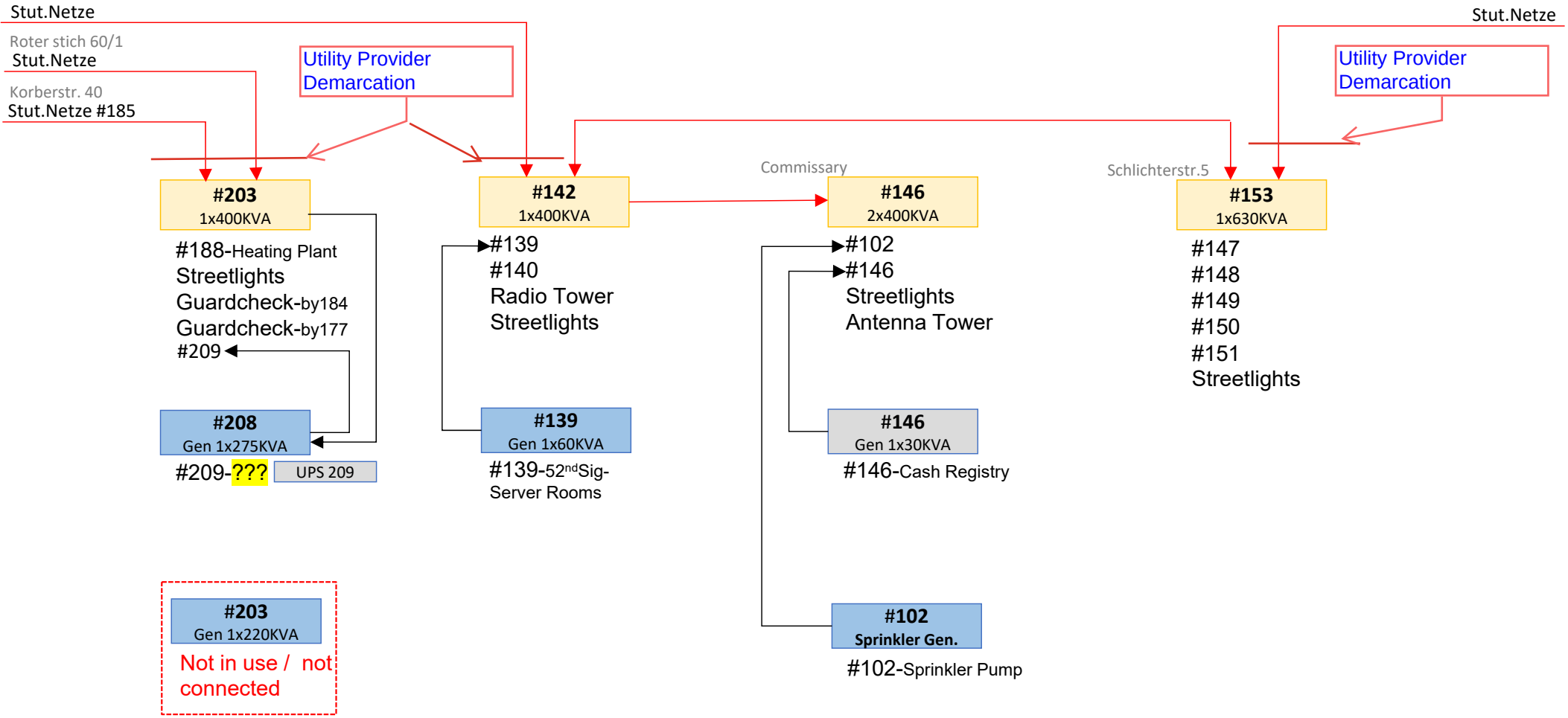

	AVT	brown=OFF
S.Longin	None US	Gen 400V
06/21/24	Tran. Station	UPS 400V

RB OMA

RB AFH /EnBW POWER DIAGRAM 10KV/400V

Entire Sheet Is Utility Provider Up To Building Switchgear

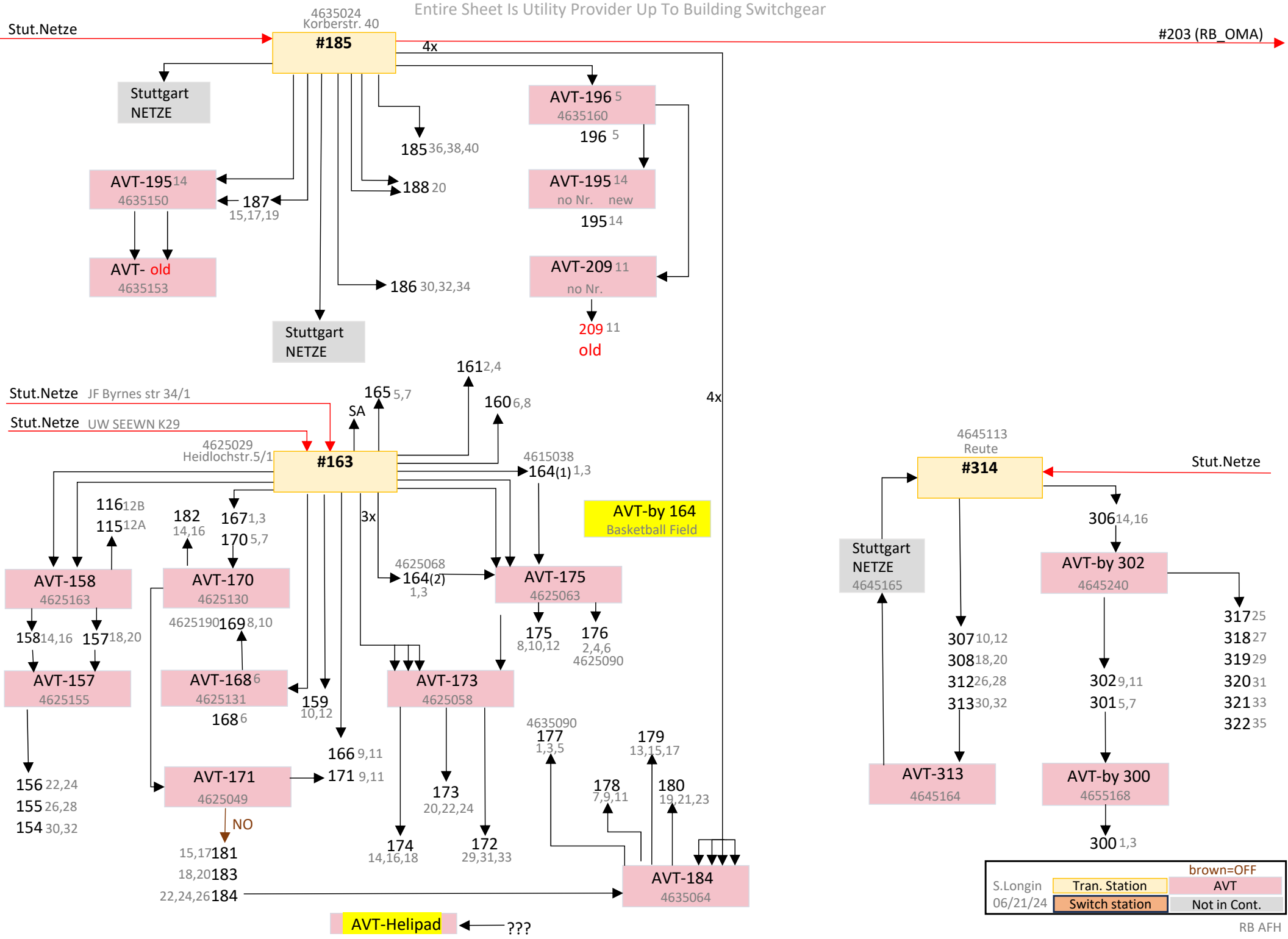

Panzer POWER DIAGRAM 10KV/400V

NetzeBW-Sub Station to Radio Site Musberg

Utility Provider Demarcation

#3097
1x500KVA

NetzeBW-Sub Station to HS/ES

#3082
2x800KVA

NetzeBW-HS/ES to Funkmast

Station Funkmast

UPS 3080 #3080 #3081

NetzeBW-Sub Station to Panzer Kas.

Utility Provider Demarcation

NetzeBW-Funkmast to Panzer Kas.

to Dog Kennel

#3041
1x160KVA

to Trng Area BLSA 25

#3093
1x250KVA

Utility Provider Demarcation

#2994
1x250KVA

#3009
1x1000KVA

Rifle Range
#3000 #3001
#3002 #3003
#3011 #3012
Shooting Tunnels1-3
Distrib.Panels

2903-partly

Gen 1x350KVA
#2903
2x630KVA
#2903

2905-partly

Gen 1x220KVA
#2905
1x1000KVA
#2905

#2986

NO

#2983
2x1600KVA

#2984
2x630KVA

#2946
1x630KVA

#2979
2x800KVA

#2987
1x400KVA

NO

#2980
1x800KVA

#2900
#2901
#2902

#2983
Gen 1x1800KVA
#2900
#2901

#2913
#2914
#2915(1)
#2915-UV Lueftung
#2999-Guard Check
Streetlights
Bridge to AFH
#2900-in Building
#2901-out of order
#2902-in Building

#2996 #2997
Streetlights
Tennis Court-
by#2914

#2949_old
#2962_old

#2931A
Gen 1x85KVA
#2931A-DCO

#2975
Gen 1x155KVA
#2941-Heat.Plant

#2947
Gen 1x350KVA
UPS 1x300KVA
#2949
AVT-#2981→#2981
#2995

#2957
Gen 1x12.5KVA
#2957-Cash Registry

#2915(2) #2917←#2918
#2919-School cont.
#2930 #2931
#2931A-DCO
#2935 #2940 #2942
#2941←#2975
#2948 #2990 #2998
#2992-Gate2
AVT-#2993
Streetlights
AVT-#2962
#2947(1):
#2949-Garrison HQ
AVT-#2981→#2981
#2995
AVT-Gate3:
#2952-Htg Pumps
#2953
#2959/2953A-Fuel Station
#2947(2)
#2957-Commissary
Rifle Range-Bypass 400V- AVT-#3000 (dead)

#2967
#2968
AVT-#2968
#2969
#2970
#2972
#2991
Streetlights

near #2987
Gen 1x350KVA
#2970
#2972
#2991
Streetlights

#2960
#2961→#2952
AVT-#2962→#2962
#2963
#2965
AVT-#2965
#2966
#2971→#2973
#2991-Server Rm.ByPass
AVT-Antenna by#2965
AVT-#2958:
#2956
#2958
#2974
#2989→2954
AVT-2980
Thor3-Zelt-UV1
Streetlights

Utility Provider Demarcation ——

	AVT	brown=OFF
	None US	Gen 400V
S.Longin	Tran. Station	UPS 400V
06/21/24	Switch station	

Panzer OMA

Panzer AFH /EnBW POWER DIAGRAM 10KV/400V

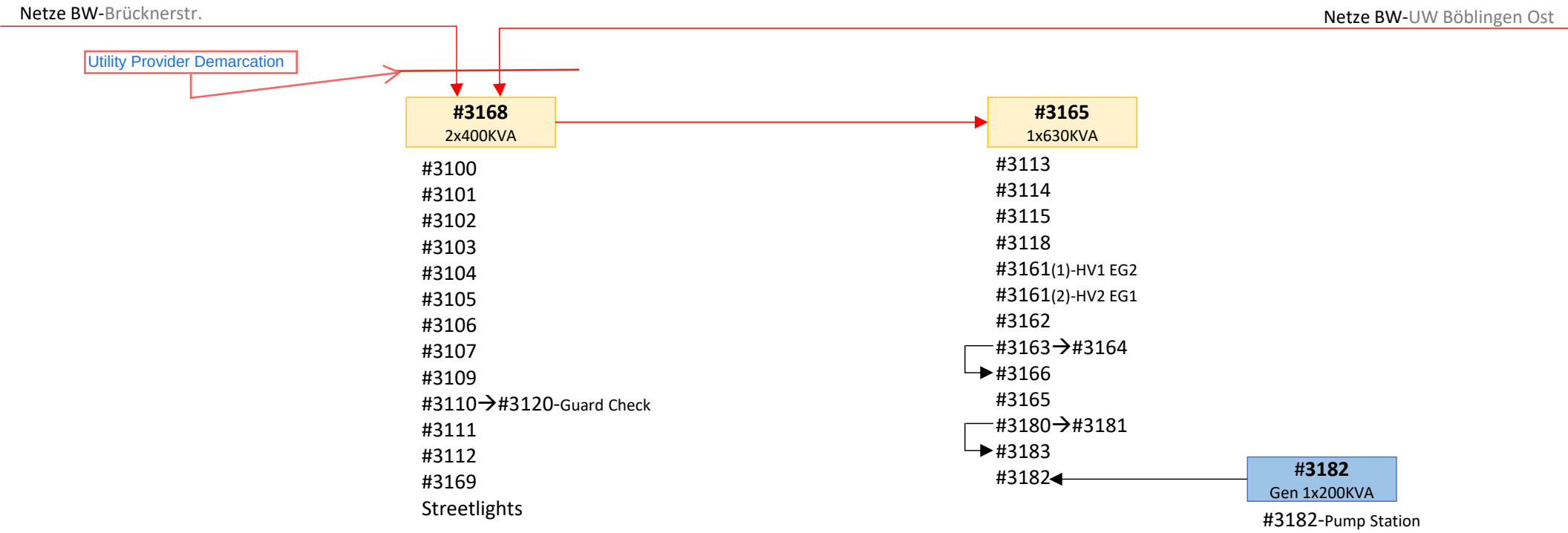

		brown=OFF
S.Longin	Tran. Station	AVT
06/21/24	Switch station	Not in Cont.