U.S. DEPARTMENT OF AGRICULTURE
AGRICULTURAL RESEARCH SERVICE
DESIGN TO REPLACE BLDG. 7 GREENHOUSE 3
JAMIE WHITTEN DELTA STATES RESEARCH CENTER
STONEVILLE, MISSISSIPPI

INDEX OF DRAWINGS

SHEET NO.	DRAWING NO.	TITLE
T100	1 OF 42	TITLE PAGE
HM101	2 OF 42	HAZARDOUS MATERIALS PLAN
D100	3 OF 42	OVERALL DEMOLITION PLAN
D200	4 OF 42	ENLARGED PARTIAL DEMOLITION PLAN
D300	5 OF 42	ENLARGED PARTIAL ROOF DEMOLITION PLAN
D400	6 OF 42	DEMOLITION ELEVATIONS
A100	7 OF 42	OVERALL FLOOR PLAN
A200	8 OF 42	ENLARGED PARTIAL PLAN
A201	9 OF 42	ENLARGED PARTIAL ROOF PLAN
A300	10 OF 42	ELEVATIONS
A400	11 OF 42	BUILDING SECTION
A500	12 OF 42	WALL SECTION
A501	13 OF 42	WALL SECTION DETAILS AND DOOR SCHEDULE
PD100	14 OF 42	PLUMBING DEMOLITION PLAN
P100	15 OF 42	PLUMBING PLAN
P600	16 OF 42	PLUMBING SCHEDULES AND DETAILS
MD100	17 OF 42	MECHANICAL DEMOLITION PLAN
MD101	18 OF 42	MECHANICAL DEMOLITION PLAN BID OPTION 1
MD102	19 OF 42	MECHANICAL ROOF DEMOLITION PLAN OPTION 1
MD800	20 OF 42	HOT WATER PIPING DEMOLITION DIAGRAM
M100	21 OF 42	MECHANICAL FLOOR PLAN
M101	22 OF 42	MECHANICAL PLAN BID OPTION 1
M102	23 OF 42	MECHANICAL ROOF PLAN BID OPTION 1
M500	24 OF 42	MECHANICAL DETAILS
M501	25 OF 42	MECHANICAL DETAILS BID OPTION 1
M600	26 OF 42	BASE BID MECHANICAL SCHEDULE
M601	27 OF 42	MECHANICAL SCHEDULE AND DETAILS BID OPTION 1
M700	28 OF 42	MECHANICAL CONTROLS BID OPTION #1
M701	29 OF 42	MECHANICAL CONTROLS BID OPTION #1
M702	30 OF 42	MECHANICAL CONTROLS BID OPTION #1
M703	31 OF 42	MECHANICAL CONTROLS BID OPTION #1
M800	32 OF 42	HOT WATER PIPING DIAGRAM
E001	33 OF 42	ELECTRICAL LEGEND AND NOTES
ED100	34 OF 42	OVERALL ELECTRICAL DEMO PLAN
ED101	35 OF 42	ENLARGED PARTIAL PLAN: ELECTRICAL DEMO
E100	36 OF 42	OVERALL ELECTRICAL PLAN
E101	37 OF 42	ENLARGED PARTIAL PLAN: ELECTRICAL
E102	38 OF 42	ELECTRICAL ROOF PLAN
EL101	39 OF 42	ENLARGED PARTIAL PLAN: ELECTRICAL LIGHTING
E500	40 OF 42	ELECTRICAL DETAILS
E600	41 OF 42	PANEL SCHEDULES
E700	42 OF 42	LIGHTING SLIDES

VICINITY MAP

NO SCALE

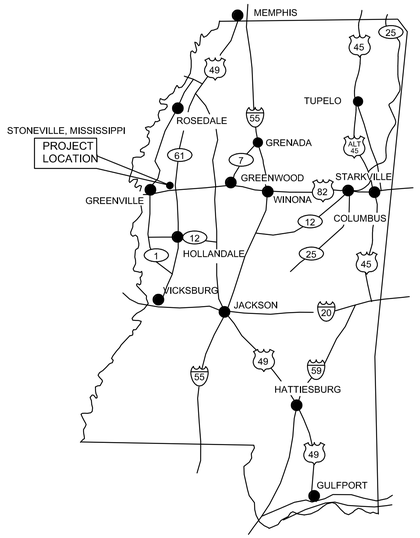

MISSISSIPPI

LOCATION MAP

NO SCALE

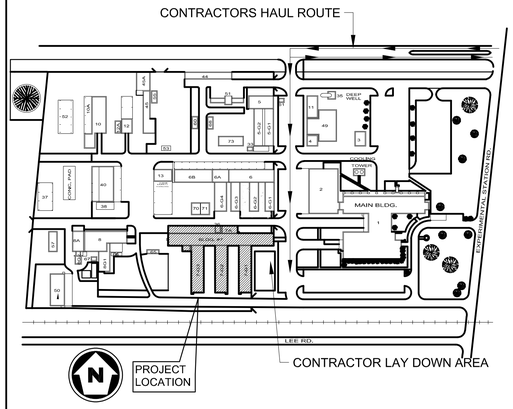

U. S. DEPARTMENT OF AGRICULTURE
AGRICULTURAL RESEARCH SERVICE
JAMIE WHITTEN DELTA STATES RESEARCH CENTER
STONEVILLE, MISSISSIPPI

REGISTERED ARCHITECT Rebecca P. Palmer 2514 Greenwood, MS 2/24/26 STATE OF MISSISSIPPI

USDA

DESCRIPTION OF WORK: THE PROJECT WILL BE BID AS ONE (1) BASE BID AND ONE (1) BID OPTION.

BASE BID: CONSISTS OF DEMOLITION AND REPLACEMENT OF GREENHOUSE 3. WORK INCLUDES BUT IS NOT LIMITED TO REMOVING GREENHOUSE SUB-STRUCTURE, GLAZING (INCLUDING ASBESTOS TRANSITE PANELS), PIPING AND GREENHOUSE SYSTEMS COMPONENTS. NEW WORK WILL INCLUDE MASONRY KNEEWALL, GREENHOUSE FRAMING WITH TRANSLUCENT POLYCARBONATE GLAZING, EVAPORATIVE COOLING SYSTEM, HEATING WATER, RO WATER, DOMESTIC WATER, AUTOMATIC SHADE CLOTH SYSTEM, ADJUSTABLE HEIGHT PLANT TABLES, CONTROL SYSTEM WITH WEATHER STATION AND REQUIRED MODIFICATIONS WITHIN EXISTING HEAD HOUSE HEATING WATER SUPPLY.

BID OPTION 1: CONSISTS OF DEMOLITION AND MODIFICATIONS TO PROVIDE HEATING TO EXISTING HEADHOUSE (BUILDING 7). WORK INCLUDES, BUT IS NOT LIMITED TO DEMOLITION AND REPLACEMENT OF PIPING AND FAN COIL UNITS (FCU'S). PLUS DEMOLITION OF FUME HOOD IN RM. 140. THIS INCLUDES ALL TERMINATION AND CAPPING OF UTILITIES (GAS, AIR, VACUUM, ELECTRICAL AND WATER DRAINS.

THE Johnson·M'Adams PLANNERS·ENGINEERS·PLANNING·SURVEYING·MANAGEMENT
P.O. BOX 513, GREENWOOD, MISSISSIPPI - (662) 455-5943
FIRM P.A.

NO.	DATE	BY	DESCRIPTION

REVISIONS

A-E FIRM	USDA
PROJECT MANAGER	EPM
RPP	KM
DESIGNER	PPM
TGT	
CHECKED BY	SAFETY & HEALTH
DRL	
JOB #	REAL PROPERTY
3625	

USDA Agricultural Research Service

USDA AGRICULTURAL SERVICE
JAMIE WHITTEN DELTA STATES RESEARCH CENTER
DESIGN TO REPLACE BLDG. 7 GREENHOUSE 3
STONEVILLE, MISSISSIPPI

TITLE PAGE

PROJECT NO.	AGRICULTURAL RESEARCH SERVICE	SHEET
DATE 2/24/2026	MID SOUTH AREA STONEVILLE, MS	T-100 1 OF 42

J:\greenwood\2025 Jobs\3625 USDA B7 GH3 + Head House Stoneville\07 Working Folder\Arch\T100.dwg
Feb 24, 2026 - 4:16pm

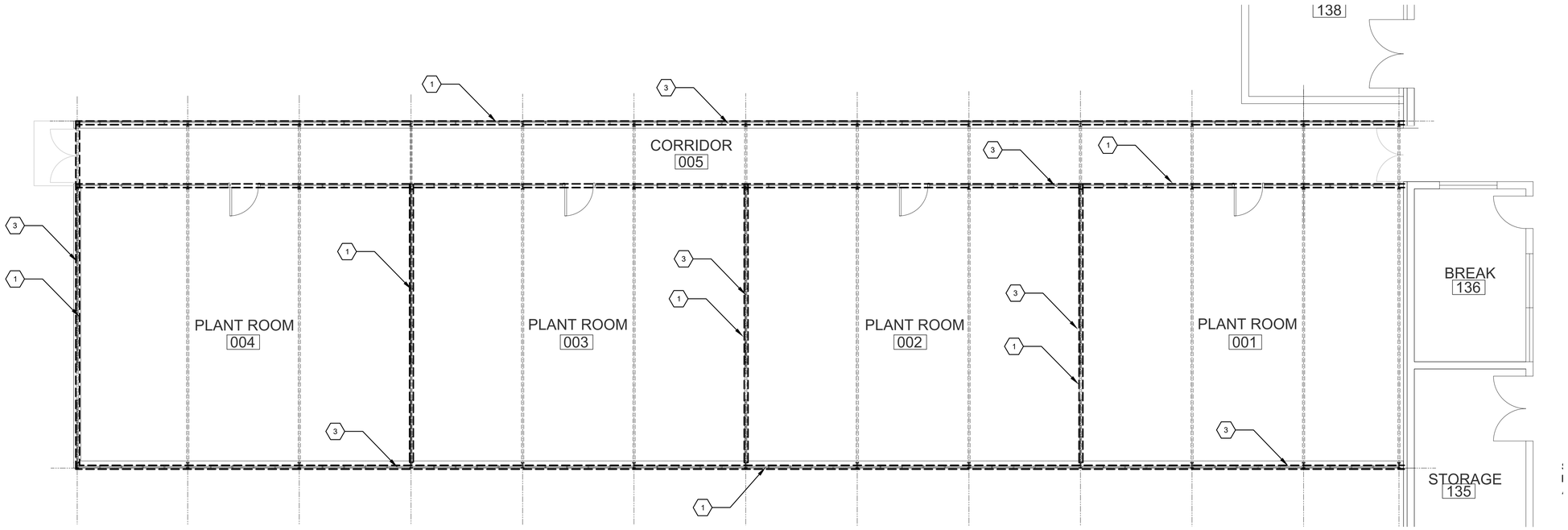

1 HM101 HAZARDOUS MATERIALS PLAN - GREENHOUSE 3
SCALE: 3/16"=1'-0"

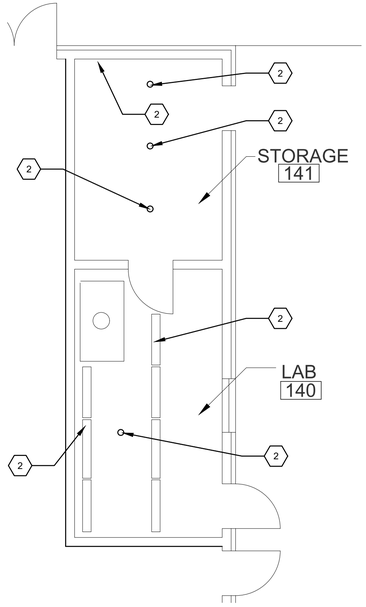

2 HM101 HAZARDOUS MATERIALS RCP - LAB 140
SCALE: 3/16"=1'-0"

ENVIRONMENTAL GENERAL NOTES:

1. THE CONTRACTOR SHALL REMOVE AND DISPOSE OF ALL ASBESTOS CONTAINING BUILDING MATERIALS (ACBM) AS HAZARDOUS ASBESTOS WASTE IN ACCORDANCE WITH ALL LOCAL, STATE AND FEDERAL REGULATIONS.
2. THE CONTRACTOR SHALL NOTIFY THE MISSISSIPPI STATE DEPARTMENT OF HEALTH AND ENVIRONMENT A MINIMUM OF 10 DAYS PRIOR TO ANY DEMOLITION WORK AT THE FACILITY.
3. THE HEADHOUSE AND OTHER GREENHOUSES WILL BE OCCUPIED DURING CONSTRUCTION. PROVIDE PROPER CONTAINMENT AND VENTILATION DURING HAZARDOUS MATERIAL ABATEMENT PROCEDURES AS DIRECTED BY SPECIFICATIONS.
4. ASSUME THAT ALL PAINT COATINGS CONTAIN SOME LEVEL OF LEAD. PROVIDE OSHA REQUIRED PROTECTION FOR WORKERS DISTURBING EXISTING PAINT COATINGS REQUIRED TO PERFORM THE WORK.

ACBM PANEL LOCATIONS - - - - - - - - - - - - - - - - -

ENVIRONMENTAL KEY NOTES:

1. THE SOLID PANELS IN THE PROJECT AREA GREENHOUSE SYSTEM ARE ASBESTOS CONTAINING MATERIAL. REMOVE AND DISPOSE OF AS ASBESTOS CONTAINING MATERIAL.
2. REMOVE DRYWALL CEILING OF LAB 140 AND LAB 141. DISPOSE OF AS ASBESTOS CONTAINING MATERIAL. ALL EXISTING LIGHT FIXTURES, REGISTERS, GRILLES AND CEILING-MOUNTED ITEMS SHALL BE CLEANED OF ASBESTOS CONTAMINATION AND REINSTALLED IN THE NEW CEILING SYSTEM. (BID OPTION 1)
3. ASSUME THAT ALL GLAZING COMPOUND CONTAINS ASBESTOS. REMOVE AND DISPOSE OF AS ASBESTOS CONTAINING BUILDING MATERIALS (ACBM) WASTE IN ACCORDANCE WITH ALL LOCAL, STATE AND FEDERAL REGULATIONS.

REGISTERED ARCHITECT
Rebecca P Palmer
2514
Greenwood, MS
STATE OF MISSISSIPPI
2/24/26

0 2' 4' 8' 16'
SCALE: 3/16"= 1'-0"

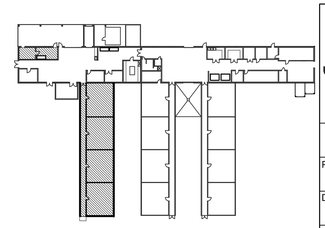

KEYPLAN
NTS

THE Johnson • McAdams FIRM P.A.
ARCHITECT/ENGINEERS • PLANNERS • SURVEYING • MANAGEMENT
P.O. BOX 510, GREENWOOD, MISSISSIPPI - (662) 455-4443

NO.	DATE	BY	DESCRIPTION

REVISIONS

A-E FIRM	USDA
PROJECT MANAGER RPP	EPM K. MAGEE
DESIGNER TGT	PPM
CHECKED BY DRL	SAFETY & HEALTH
JOB # 3625	REAL PROPERTY

USDA Agricultural Research Service

USDA AGRICULTURAL RESEARCH SERVICE
JAMIE WHITTEN DELTA STATES RESEARCH CENTER
DESIGN TO REPLACE BLDG. 7 GREENHOUSE 3
STONEVILLE, MISSISSIPPI

HAZARDOUS MATERIALS PLAN

PROJECT NO.	AGRICULTURAL RESEARCH SERVICE	SHEET
DATE 2/24/2026	MID SOUTH AREA STONEVILLE, MS	HM101 2 OF 42

J:\Greenwood\2025 Jobs\3625 USDA B7 GH3 + Head House Stoneville\07 Working Folder\Arch\HM101.dwg
Feb 24, 2026 - 10:39am

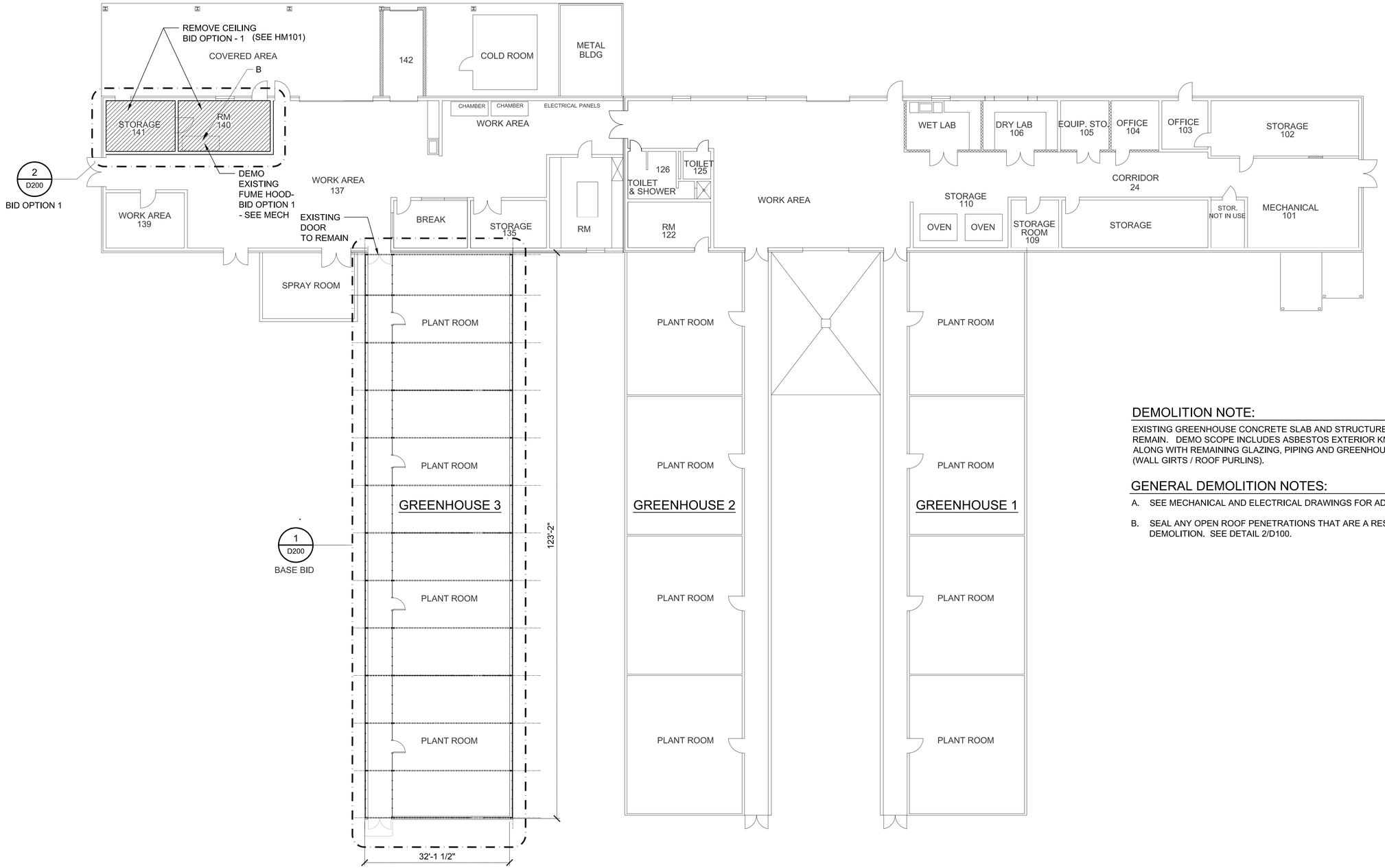

1 D100 OVERALL DEMOLITION PLAN
SCALE: 3/32"=1'-0"

DEMOLITION NOTE:

EXISTING GREENHOUSE CONCRETE SLAB AND STRUCTURE ARE EXISTING TO REMAIN. DEMO SCOPE INCLUDES ASBESTOS EXTERIOR KNEE WALL PANELS, ALONG WITH REMAINING GLAZING, PIPING AND GREENHOUSE SUB-STRUCTURE (WALL GIRTS / ROOF PURLINS).

GENERAL DEMOLITION NOTES:

A. SEE MECHANICAL AND ELECTRICAL DRAWINGS FOR ADDITIONAL DEMOLITION.

B. SEAL ANY OPEN ROOF PENETRATIONS THAT ARE A RESULT OF GROUND LEVEL DEMOLITION. SEE DETAIL 2/D100.

REGISTERED ARCHITECT Rebecca P. Palmer 2514 Greenwood, MS 2/24/26 STATE OF MISSISSIPPI

16' 8' 0 16'
SCALE: 3/32" = 1'-0"

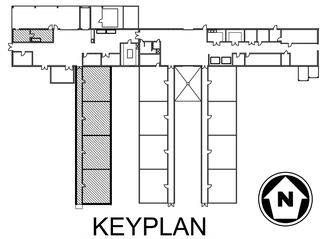

KEYPLAN
NTS

THE Johnson · M'Adams FIRM P.A.
ARCHITECTS/ENGINEERS · PLANNING · SURVEYING · MANAGEMENT
P.O. BOX 513, GREENWOOD, MISSISSIPPI · (662) 453-4543

NO.	DATE	BY	DESCRIPTION

REVISIONS

A-E FIRM	USDA
PROJECT MANAGER RPP	EPM K. MAGEE
DESIGNER TGT	PPM
CHECKED BY DRL	SAFETY & HEALTH
JOB # 3820-E	REAL PROPERTY

USDA Agricultural Research Service

USDA AGRICULTURAL RESEARCH SERVICE
JAMIE WHITTEN DELTA STATES RESEARCH CENTER
DESIGN TO REPLACE BLDG. 7 GREENHOUSE 3
STONEVILLE, MISSISSIPPI

OVERALL DEMOLITION PLAN

PROJECT NO.	AGRICULTURAL RESEARCH SERVICE	SHEET
DATE 2/24/2026	MID SOUTH AREA STONEVILLE, MS	D100 3 OF 42

J:\greenwood\2025 Jobs\3625 USDA B7 GH3 + Head House Stoneville\07 Working Folder\Arch\D100.dwg
Feb 24, 2026 - 10:40am

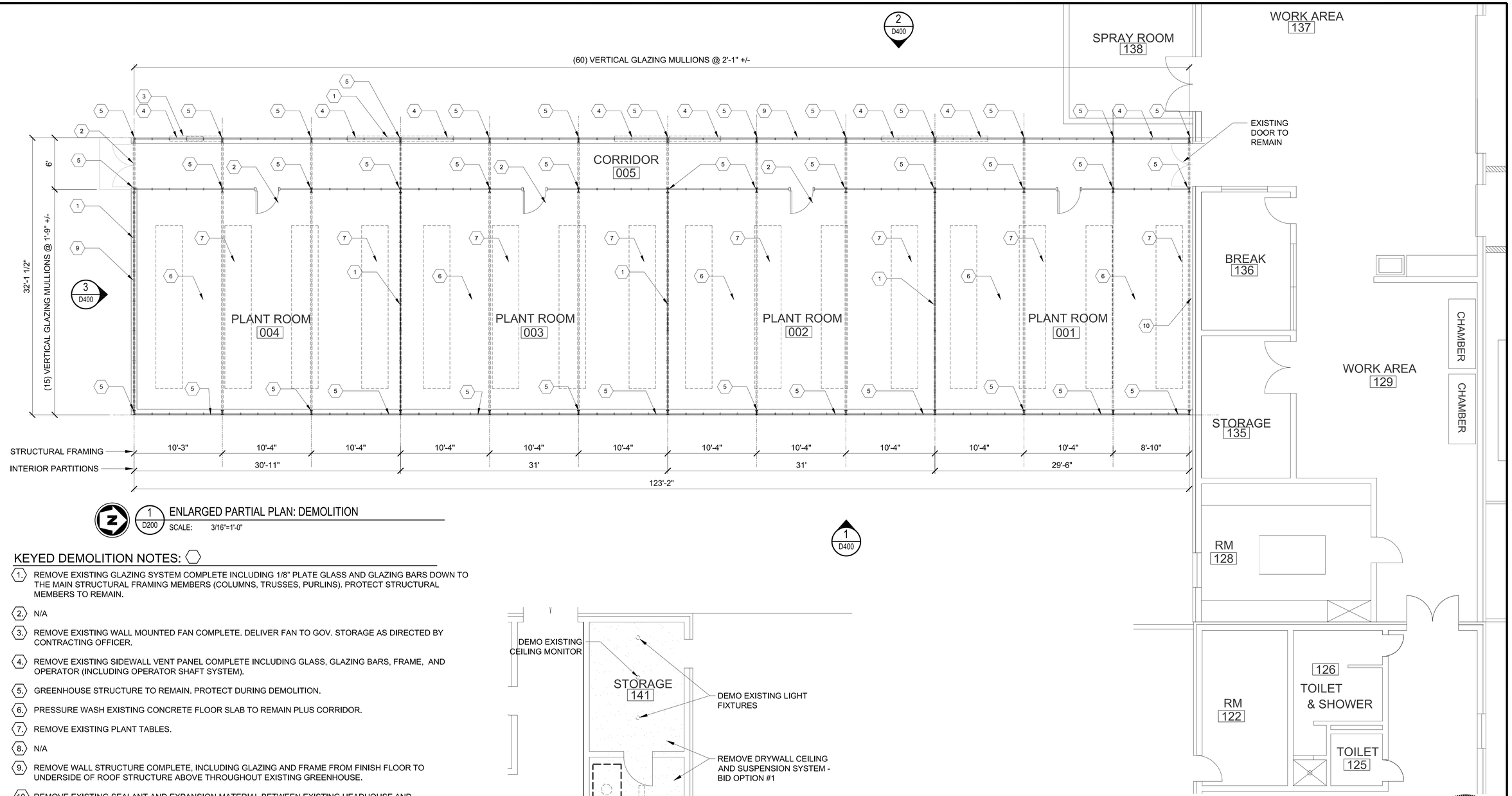

1 D200 ENLARGED PARTIAL PLAN: DEMOLITION
SCALE: 3/16"=1'-0"

KEYED DEMOLITION NOTES:

1. REMOVE EXISTING GLAZING SYSTEM COMPLETE INCLUDING 1/8" PLATE GLASS AND GLAZING BARS DOWN TO THE MAIN STRUCTURAL FRAMING MEMBERS (COLUMNS, TRUSSES, PURLINS). PROTECT STRUCTURAL MEMBERS TO REMAIN.
2. N/A
3. REMOVE EXISTING WALL MOUNTED FAN COMPLETE. DELIVER FAN TO GOV. STORAGE AS DIRECTED BY CONTRACTING OFFICER.
4. REMOVE EXISTING SIDEWALL VENT PANEL COMPLETE INCLUDING GLASS, GLAZING BARS, FRAME, AND OPERATOR (INCLUDING OPERATOR SHAFT SYSTEM).
5. GREENHOUSE STRUCTURE TO REMAIN. PROTECT DURING DEMOLITION.
6. PRESSURE WASH EXISTING CONCRETE FLOOR SLAB TO REMAIN PLUS CORRIDOR.
7. REMOVE EXISTING PLANT TABLES.
8. N/A
9. REMOVE WALL STRUCTURE COMPLETE, INCLUDING GLAZING AND FRAME FROM FINISH FLOOR TO UNDERSIDE OF ROOF STRUCTURE ABOVE THROUGHOUT EXISTING GREENHOUSE.
10. REMOVE EXISTING SEALANT AND EXPANSION MATERIAL BETWEEN EXISTING HEADHOUSE AND GREENHOUSE. ADJUST EXISTING FLASHING AT HEAD HOUSE AS REQUIRED TO CREATED A WATER TIGHT SYSTEM OVER NEW ROOF PANELS AND GLAZING SYSTEM. (CONTRACTOR HAS OPTION TO REPLACE FLASHING WITH FLASHING OF SAME MATERIALS.)

DEMOLITION NOTE:

EXISTING GREENHOUSE CONCRETE SLAB AND STRUCTURE ARE EXISTING TO REMAIN. DEMOLITION SCOPE INCLUDES ASBESTOS EXTERIOR KNEE WALL SOLID PANELS, ALONG WITH REMAINING GREENHOUSE FRAMING, GLAZING, PIPING AND GREENHOUSE SUB-STRUCTURE (WALL GIRTS / ROOF PURLINS), AND EXISTING PLANT TABLES. SEE MEP FOR ADDITIONAL INFORMATION. SEE HM101 FOR HAZARDOUS MATERIALS PLAN.

GENERAL DEMOLITION NOTES:

A. SEE MECHANICAL AND ELECTRICAL DRAWINGS FOR ADDITIONAL DEMOLITION.

B. SEAL ALL OPEN ROOF PENETRATIONS THAT ARE A RESULT OF DEMOLITION.

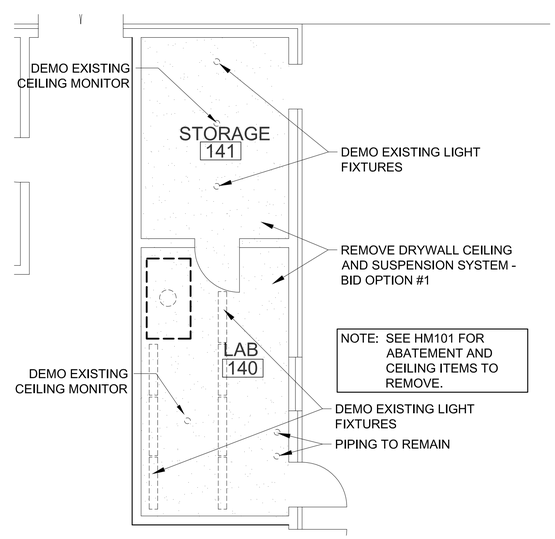

2 D200 ENLARGED LAB PLAN: REFLECTED CEILING DEMOLITION PLAN (BID OPTION 1)
SCALE: 3/16"=1'-0"

0 2' 4' 8' 16'
SCALE: 3/16"= 1'-0"

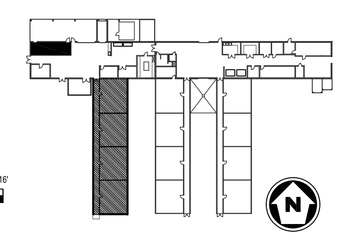

REGISTERED ARCHITECT Rebecca P. Palmer 2514 Greenwood, MS STATE OF MISSISSIPPI 2/24/26

THE Johnson-M'Adams FIRM P.A.
ARCHITECTS/ENGINEERS PLANNERS SURVEYING MANAGEMENT
P.O. BOX 513, GREENWOOD, MISSISSIPPI - (662) 455-6463

NO.	DATE	BY	DESCRIPTION

REVISIONS

A-E FIRM	USDA
PROJECT MANAGER: RPP	EPM: K. MAGEE
DESIGNER: TGT	PPM
CHECKED BY: DRL	SAFETY & HEALTH
JOB #: 3625	REAL PROPERTY

USDA Agricultural Research Service

USDA AGRICULTURAL RESEARCH SERVICE
JAMIE WHITTEN DELTA STATES RESEARCH CENTER
DESIGN TO REPLACE BLDG. 7 GREENHOUSE 3
STONEVILLE, MISSISSIPPI

ENLARGED PARTIAL DEMOLITION PLAN

PROJECT NO.	AGRICULTURAL RESEARCH SERVICE	SHEET
DATE: 2/24/2026	MID SOUTH AREA STONEVILLE, MS	D200 4 OF 42

J:\greenwood\2025 Jobs\3625 USDA B7 GH3 + Head House Stoneville\07 Working Folder\Arch\D200.dwg
Feb 24, 2026 - 10:42am

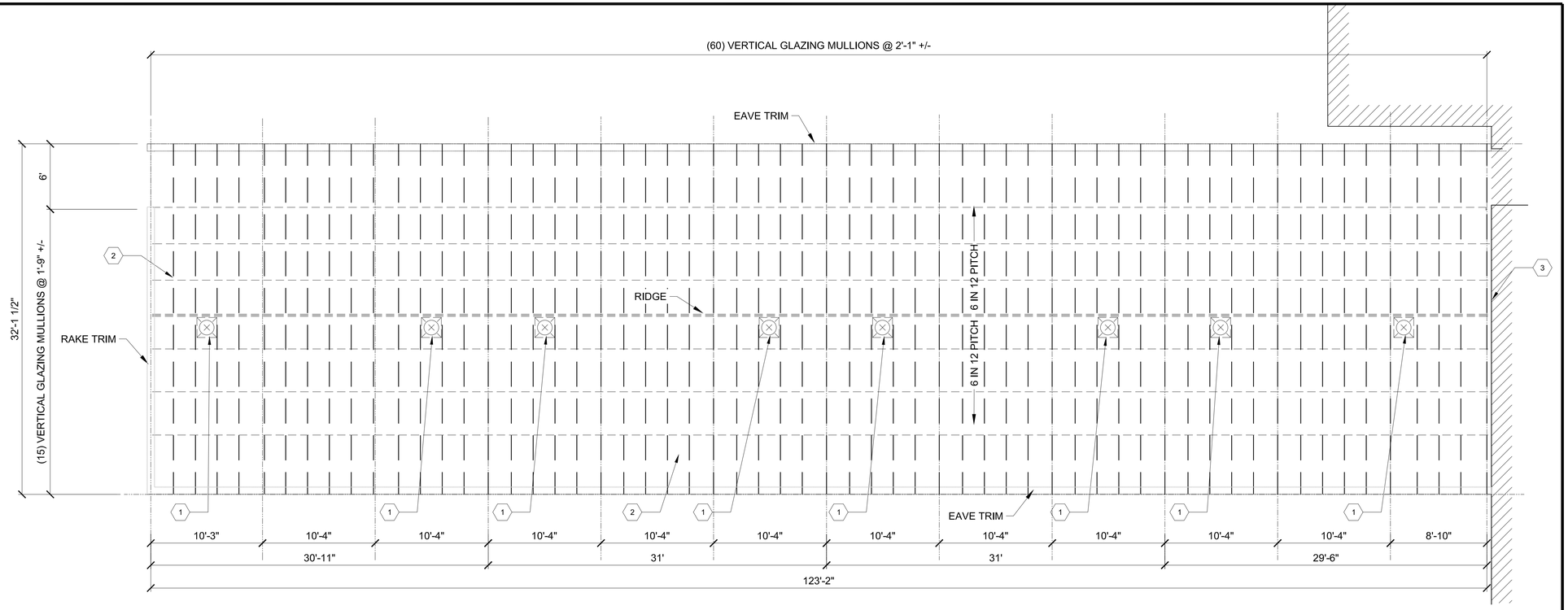

1 D300 ENLARGED PARTIAL ROOF PLAN: DEMOLITION

SCALE: 3/16"=1'-0"

DEMOLITION NOTE:

EXISTING GREENHOUSE CONCRETE SLAB AND STRUCTURE ARE EXISTING TO REMAIN. DEMO SCOPE INCLUDES ASBESTOS EXTERIOR KNEE WALL TRANSITE PANELS, ALONG WITH REMAINING GLAZING, PIPING AND GREENHOUSE SUB-STRUCTURE (WALL GIRTS / ROOF PURLINS). SEE MEP FOR ADDITIONAL INFORMATION.

GENERAL DEMOLITION NOTES:

A. SEE MECHANICAL AND ELECTRICAL DRAWINGS FOR ADDITIONAL DEMOLITION.

B. SEAL ANY OPEN ROOF PENETRATIONS THAT ARE A RESULT OF GROUND LEVEL DEMOLITION.

C. SEE HAZARDOUS MATERIALS PLAN FOR GLAZING COMPOUND REMOVAL AND ABATEMENT PROCEDURES.

D. COORDINATE WITH MECHANICAL THE LOCATION OF THE REMOVAL OF A GOOSENECK EXHAUST FAN. REUSE EXISTING CURB BUT ADD FLASHING MODIFICATIONS.

KEYED DEMOLITION NOTES:

1. REMOVE AND CLEAN EXISTING ROOF TOP EXHAUST FAN COMPLETE DURING ASBESTOS REMEDIATION. DELIVER FAN TO STORAGE AS DIRECTED BY CONTRACTING OFFICER.

2. REMOVE EXISTING ROOF GLAZING SYSTEM COMPLETE DOWN TO THE MAIN STRUCTURAL FRAMING, TYP.

3. DEMO FLASHING BEYOND WHERE GREEN HOUSE MEETS HEADHOUSE. PREP FOR NEW FLASHING AT HEAD HOUSE AS REQUIRED TO CREATE A WATER TIGHT SYSTEM OVER NEW ROOF PANELS AND GLAZING SYSTEM.

NOTE: STORAGE FACILITY IS LOCATED ON ARS CAMPUS GROUNDS WITHIN 1/2 MILE OF PROJECT LOCATION. THIS STORAGE IS FOR ITEMS TO BE DELIVERED TO OWNER ONLY. THIS IS NOT CONSTRUCTION ACTIVITY STORAGE.

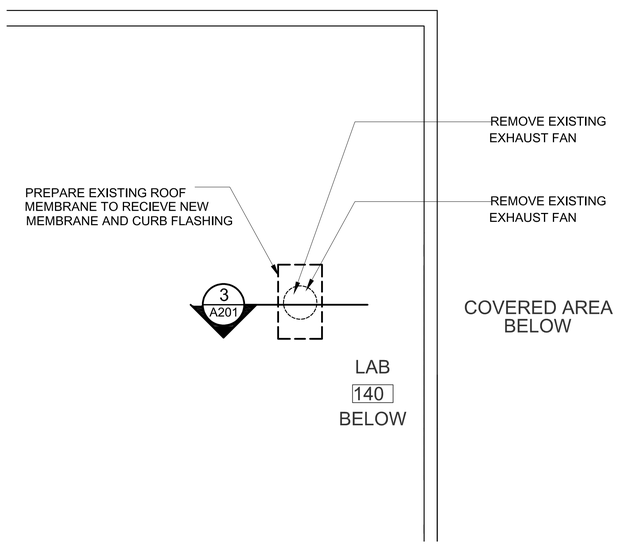

2 D200 PARTIAL ROOF PLAN: ROOF PENETRATION

SCALE: 3/16"=1'-0"

0 2' 4' 8' 16'

SCALE: 3/16"= 1'-0"

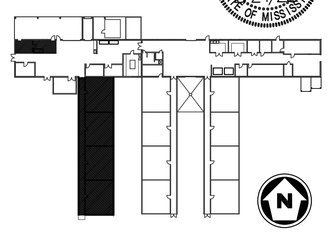

REGISTERED ARCHITECT Rebecca P. Palmer 2314 Greenwood, MS STATE OF MISSISSIPPI 2/24/2026

The Johnson · M'Adams PLANNING · ENGINEERING · SURVEYING · MANAGEMENT
P.O. BOX 513, GREENWOOD, MISSISSIPPI • (662) 455-9463

NO.	DATE	BY	DESCRIPTION

REVISIONS

A-E FIRM	USDA
PROJECT MANAGER: RPP	EPM: K. MAGEE
DESIGNER: TGT	PPM
CHECKED BY: DRL	SAFETY & HEALTH
JOB #: 3625	REAL PROPERTY

USDA Agricultural Research Service

USDA AGRICULTURAL RESEARCH SERVICE
JAMIE WHITTEN DELTA STATES RESEARCH CENTER
DESIGN TO REPLACE BLDG. 7 GREENHOUSE 3
STONEVILLE, MISSISSIPPI

ENLARGED PARTIAL ROOF DEMOLITION PLAN

PROJECT NO.

DATE 2/24/2026

AGRICULTURAL RESEARCH SERVICE
MID SOUTH AREA
STONEVILLE, MS

SHEET D300

5 OF 42

J:\greenwood\2025 Jobs\3625 USDA B7 GH3 + Head House Stoneville\07 Working Folder\Arch\D300.dwg
Feb 24, 2026 - 10:43am

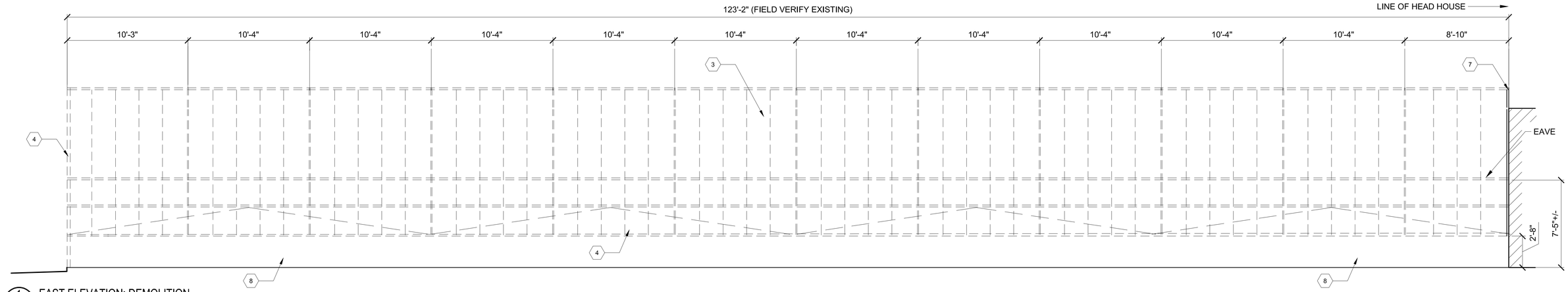

1 D400 EAST ELEVATION: DEMOLITION

SCALE: 1/4"=1'-0"

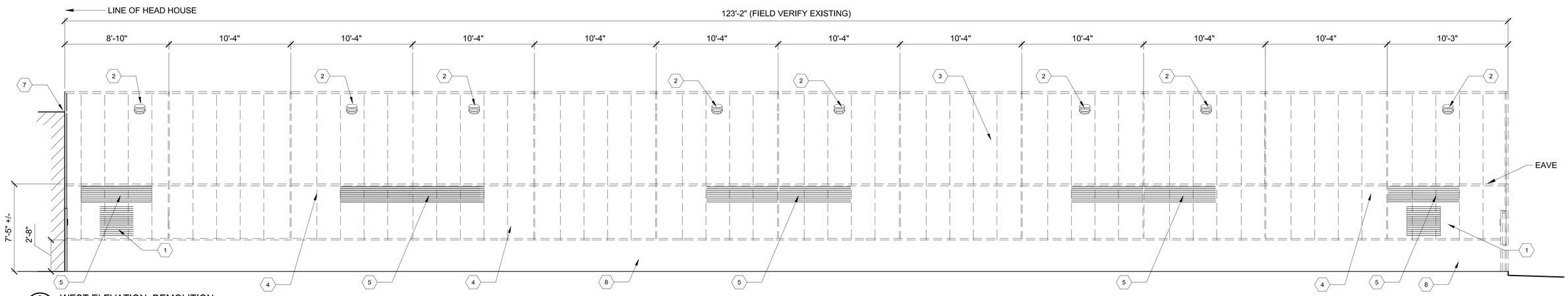

2 D400 WEST ELEVATION: DEMOLITION

SCALE: 1/4"=1'-0"

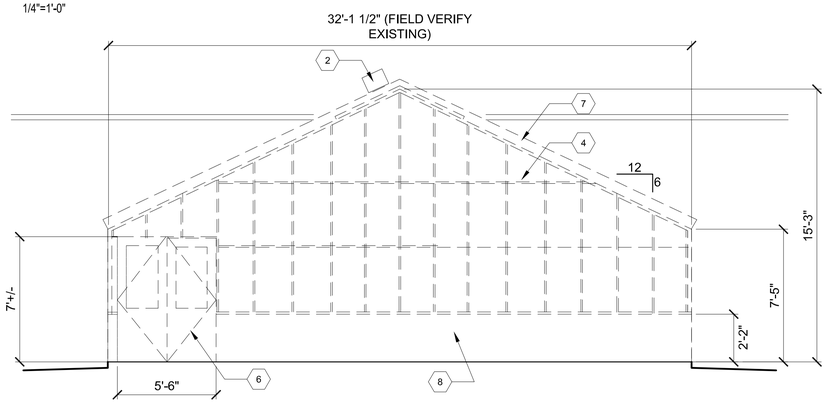

3 D400 SOUTH ELEVATION: DEMOLITION

SCALE: 1/4"=1'-0"

KEYED DEMOLITION NOTES:

1. REMOVE EXISTING WALL MOUNTED FAN COMPLETE. DELIVER FAN TO STORAGE AS DIRECTED BY CONTRACTING OFFICER.
2. REMOVE EXISTING ROOF TOP EXHAUST FAN COMPLETE. DELIVER FAN TO STORAGE AS DIRECTED BY CONTRACTING OFFICER.
3. REMOVE EXISTING ROOF, GLASS AND GLAZING SYSTEM COMPLETE DOWN TO MAIN STRUCTURAL FRAMING.
4. REMOVE EXISTING WALL GLASS AND GLAZING SYSTEM COMPLETE DOWN TO MAIN STRUCTURAL FRAMING.
5. REMOVE EXISTING SIDEWALL VENT PANEL COMPLETE INCLUDING GLASS, GLAZING BARS, FRAME AND OPERATOR (INCLUDING OPERATOR SHAFT SYHSTEM).
6. REMOVE EXISTING DOOR AND FRAME COMPLETE.
7. DEMO FLASHING BEYOND WHERE GREENHOUSE MEETS HEADHOUSE. PREP FOR NEW FLASHING AT HEAD HOUSE AS REQUIRED TO CREATE A WATER TIGHT SYSTEM OVER NEW ROOF PANELS AND GLAZING SYSTEM.
8. SEE HAZARDOUS MATERIALS PLAN FOR THE SOLID PANEL AND GLAZING COMPOUND REMOVAL SCOPE.

NOTE: STORAGE FACILITY IS LOCATED ON ARS CAMPUS GROUNDS WITHIN 1/2 MILE OF PROJECT LOCATION. THIS STORAGE IS FOR ITEMS TO BE DELIVERED TO OWNER ONLY. THIS IS NOT CONSTRUCTION ACTIVITY STORAGE.

0 2' 4' 8' 12'

SCALE: 1/4"= 1'-0"

REGISTERED ARCHITECT Rebecca P. Palmer 2514 Greenwood, MS STATE OF MISSISSIPPI 2/24/26

THE Johnson · M'Adams FIRM P.A.
ARCHITECTS/ENGINEERS/ PLANNING/ SURVEYING/ MANAGEMENT
P.O. BOX 313, GREENWOOD, MISSISSIPPI - (662) 453-6563

NO.	DATE	BY	DESCRIPTION

REVISIONS

A-E FIRM	USDA
PROJECT MANAGER RPP	EPM K. MAGEE
DESIGNER TGT	PPM
CHECKED BY DRL	SAFETY & HEALTH
JOB # 3625	REAL PROPERTY

USDA Agricultural Research Service

USDA AGRICULTURAL RESEARCH SERVICE
JAMIE WHITTEN DELTA STATES RESEARCH CENTER
RENOVATE BLDG. 3 GREENHOUSE
STONEVILLE, MISSISSIPPI

DEMOLITION ELEVATIONS

PROJECT NO.	AGRICULTURAL RESEARCH SERVICE	SHEET
	MID SOUTH AREA	D400
DATE 2/24/2026	STONEVILLE, MS	6 OF 42

J:\greenwood\2025 Jobs\3625 USDA B7 GH3 + Head House Stoneville\07 Working Folder\Arch\D400.dwg
Feb 24, 2026 - 10:45am

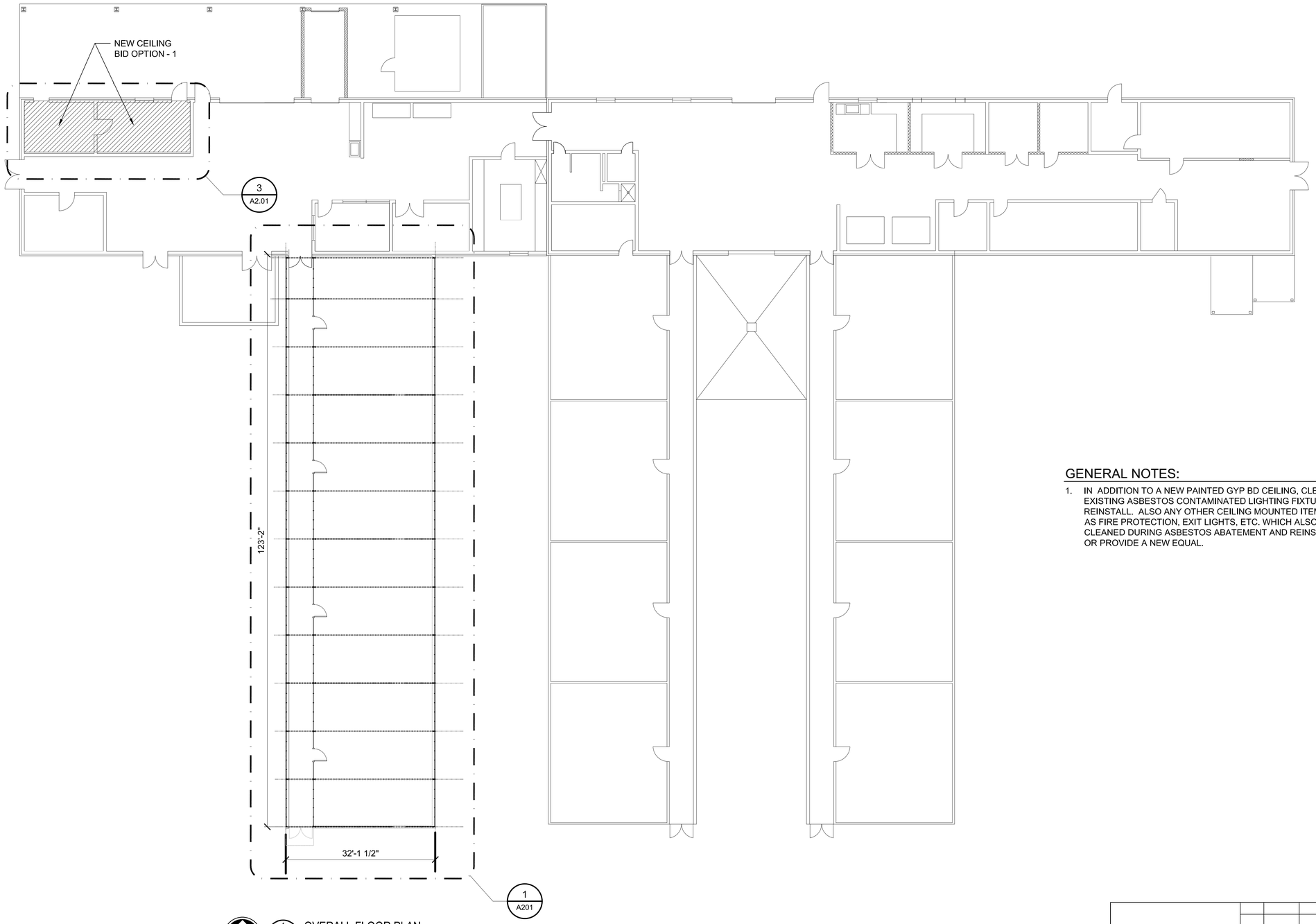

1 A100 OVERALL FLOOR PLAN
SCALE: 3/32"=1'-0"

GENERAL NOTES:

1. IN ADDITION TO A NEW PAINTED GYP BD CEILING, CLEAN EXISTING ASBESTOS CONTAMINATED LIGHTING FIXTURES AND REINSTALL. ALSO ANY OTHER CEILING MOUNTED ITEMS SUCH AS FIRE PROTECTION, EXIT LIGHTS, ETC. WHICH ALSO MUST BE CLEANED DURING ASBESTOS ABATEMENT AND REINSTALLED OR PROVIDE A NEW EQUAL.

16' 8' 0 16'
SCALE: 3/32" = 1'-0"

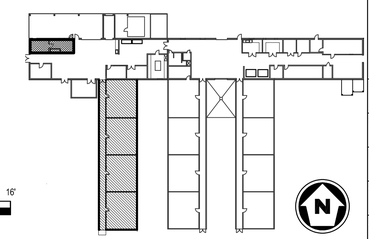

REGISTERED ARCHITECT
Rebecca P. Palmer
Rebecca P Palmer
2514
Greenwood, MS
STATE OF MISSISPPI
2/24/26

THE Johnson · M'Adams FIRM: P.A.
ARCHITECTS/ENGINEERS · PLANNERS · SURVEYING · MANAGEMENT
P.O. BOX 513, GREENWOOD, MISSISSIPPI · (662) 455-9463

NO.	DATE	BY	DESCRIPTION

REVISIONS

A-E FIRM	USDA
PROJECT MANAGER: RPP	EPM: K. MAGEE
DESIGNER: TGT	PPM
CHECKED BY: DRL	SAFETY & HEALTH
JOB #: 3625	REAL PROPERTY

USDA Agricultural Research Service

USDA AGRICULTURAL RESEARCH SERVICE
JAMIE WHITTEN DELTA STATES RESEARCH CENTER
DESIGN TO REPLACE BLDG. 7 GREENHOUSE 3
STONEVILLE, MISSISSIPPI

OVERALL FLOOR PLAN

PROJECT NO.	AGRICULTURAL RESEARCH SERVICE	SHEET
DATE 2/24/2026	MID SOUTH AREA STONEVILLE, MS	A100 7 OF 42

L:\greenwood\2025 Jobs\3625 USDA B7 GH3 + Head House Stoneville\07 Working Folder\Arch\A100.dwg
Feb 24, 2026 - 10:47am

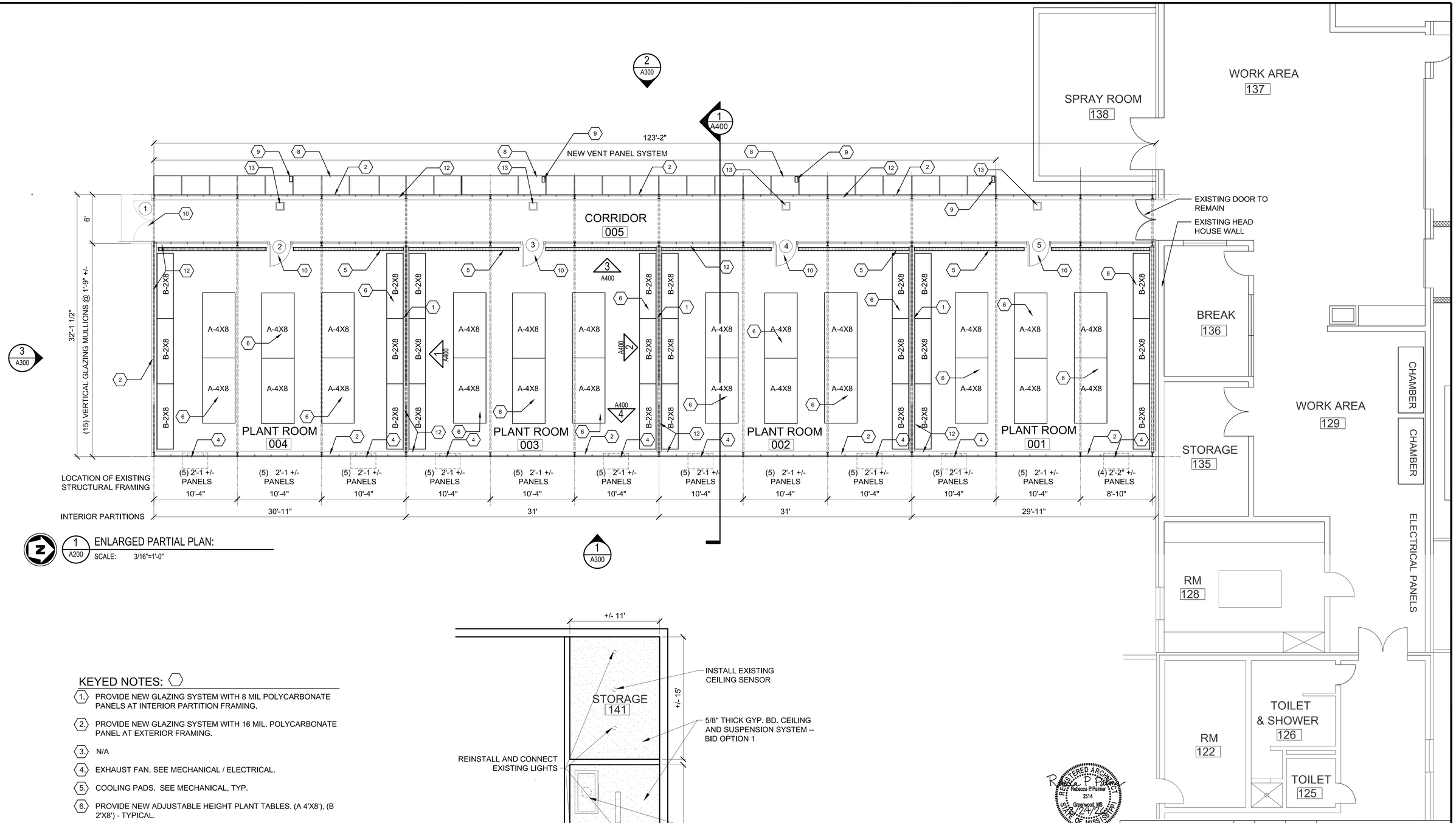

ENLARGED PARTIAL PLAN:

1 / A200 SCALE: 3/16"=1'-0"

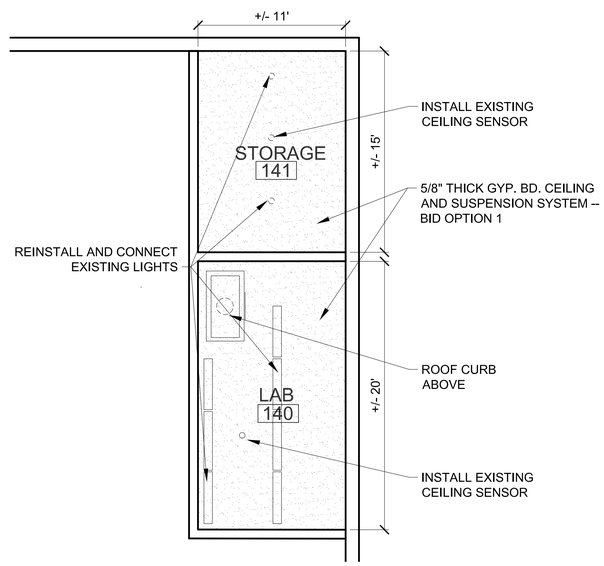

ENLARGED STORAGE AND LAB RCP

2 / A201 SCALE: 3/16"=1'-0"

KEYED NOTES:

1. PROVIDE NEW GLAZING SYSTEM WITH 8 MIL POLYCARBONATE PANELS AT INTERIOR PARTITION FRAMING.
2. PROVIDE NEW GLAZING SYSTEM WITH 16 MIL. POLYCARBONATE PANEL AT EXTERIOR FRAMING.
3. N/A
4. EXHAUST FAN. SEE MECHANICAL / ELECTRICAL.
5. COOLING PADS. SEE MECHANICAL, TYP.
6. PROVIDE NEW ADJUSTABLE HEIGHT PLANT TABLES. (A 4'X8'), (B 2'X8') - TYPICAL.
7. N/A
8. PROVIDE ALUMINUM RACK SUPPORT SYSTEM FOR VENT OPERATORS AS SPECIFIED.
9. PROVIDE VENT OPERATOR. COORDINATE WITH MECHANICAL.
10. PROVIDE DOOR. SEE SCHEDULE.
11. N/A
12. PROVIDE 8" CMU KNEE WALL TYP.
13. EXISTING FLOOR DRAINS TO REMAIN. (SEE PLUMBING).

0 2' 4' 8' 16'

SCALE: 3/16"= 1'-0"

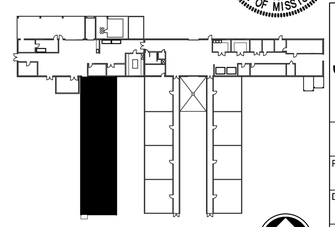

REGISTERED ARCHITECT Rebecca P. Palmer 2514 Greenwood, MS 2/24/26 STATE OF MISSISSIPPI

The Johnson • M'Adams PLLC
ARCHITECTS/ENGINEERS PLANNERS SURVEYING MANAGEMENT
P.O. BOX 513, GREENWOOD, MISSISSIPPI | (662) 455-9943

NO.	DATE	BY	DESCRIPTION

REVISIONS

A-E FIRM	USDA
PROJECT MANAGER RPP	EPM K. MAGEE
DESIGNER TGT	PPM
CHECKED BY DRL	SAFETY & HEALTH
JOB # 3625	REAL PROPERTY

USDA Agricultural Research Service

USDA AGRICULTURAL RESEARCH SERVICE
JAMIE WHITTEN DELTA STATES RESEARCH CENTER
DESIGN TO REPLACE BLDG. 7 GREENHOUSE 3
STONEVILLE, MISSISSIPPI

ENLARGED PARTIAL PLAN

PROJECT NO.	AGRICULTURAL RESEARCH SERVICE	SHEET
DATE 2/24/2026	MID SOUTH AREA STONEVILLE, MS	A200 8 OF 42

J:\greenwood\2025 Jobs\3625 USDA B7 GH3 + Head House Stoneville\07 Working Folder\Arch\A200.dwg
Feb 24, 2026 - 10:50am

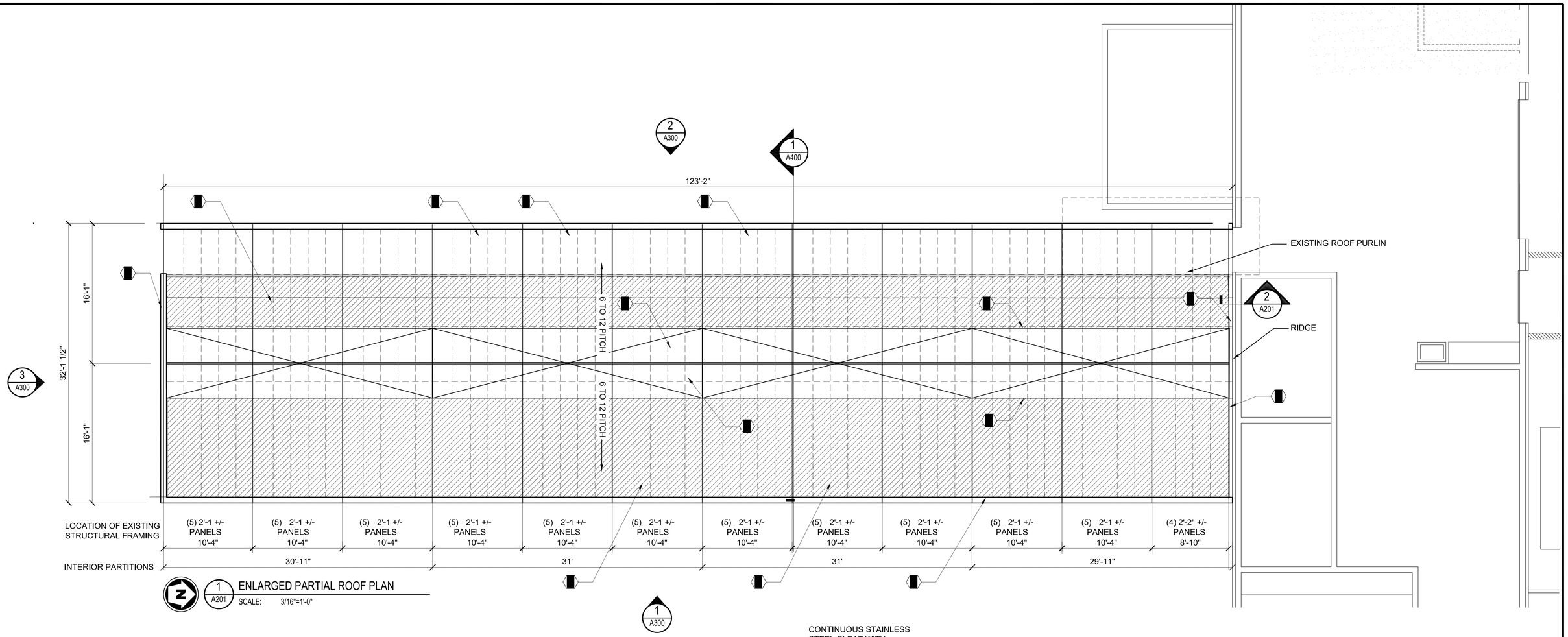

1 A201 ENLARGED PARTIAL ROOF PLAN
SCALE: 3/16"=1'-0"

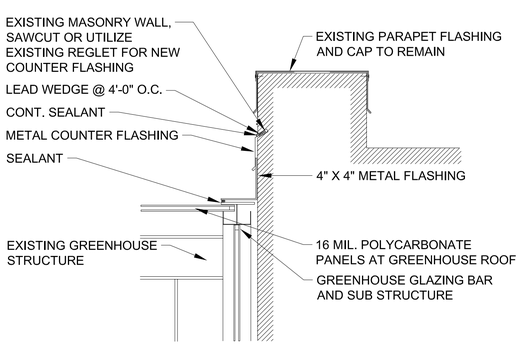

2 A201 FLASHING DETAIL
SCALE: 1 1/2"=1'-0"

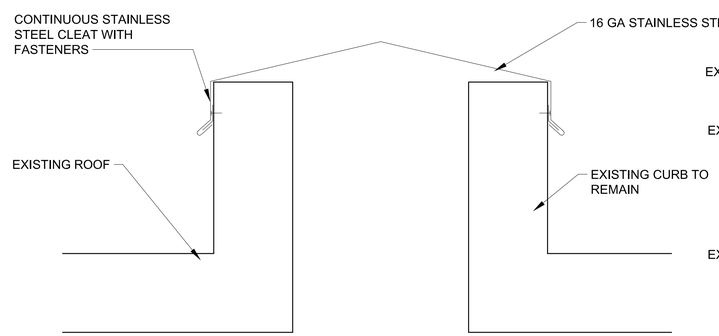

3 A201 FUMEHOOD CURB DETAIL
SCALE: 1 1/2"=1'-0"

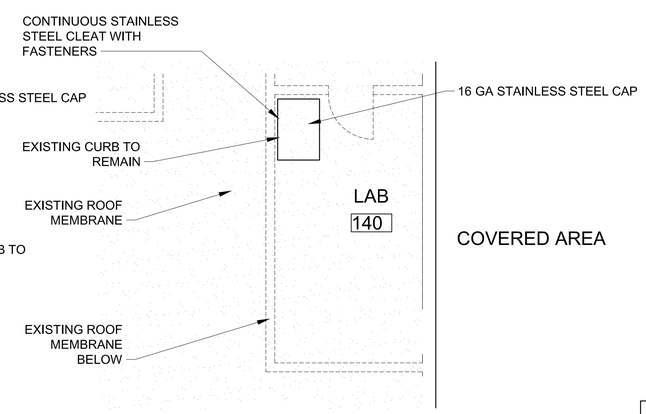

4 A201 FUMEHOOD CURB PLAN AT ROOF
SCALE: 1 1/2"=1'-0"

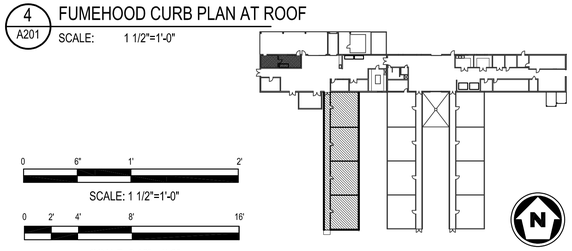

0 6" 1' 2'
SCALE: 1 1/2"=1'-0"

0 2' 4' 8' 16'
SCALE: 3/16"= 1'-0"

KEYED NOTES:

1. PROVIDE NEW 16 MIL. POLYCARBONATE ROOF AND GLAZING SYSTEM FULL LENGTH FROM EAVE TO BASE OF RIDGE VENT. (TYP.)
2. PROVIDE CONTINUOUS MOTORIZED RIDGE VENT AT EACH PLANT ROOM. SEE MECHANICAL / ELECTRICAL DRAWINGS.
3. PROVIDE 5" PURLIN @ BASE OF NEW RIDGE VENT.
4. PROVIDE NEW EAVE/GABLE TRIM FROM MANUFACTURER AS REQUIRED TO FACILITATE INSTALLATION OF NEW ROOF AND WALL GLAZING SYSTEM.
5. N/A
6. PROVIDE SHADE SCREENS AS SPECIFIED.

REGISTERED ARCHITECT Rebecca P. Palmer 2514 Greenwood, MS 2/24/26 STATE OF MISSISSIPPI

NO.	DATE	BY	DESCRIPTION

REVISIONS

THE Johnson · M'Adams FIRM P.A.
ARCHITECTS/ENGINEERS PLANNERS SURVEYING MANAGEMENT
P.O. BOX 513, GREENWOOD, MISSISSIPPI - (662) 455-0843

USDA Agricultural Research Service

USDA AGRICULTURAL RESEARCH SERVICE
JAMIE WHITTEN DELTA STATES RESEARCH CENTER
DESIGN TO REPLACE BLDG. 7 GREENHOUSE 3
STONEVILLE, MISSISSIPPI

ENLARGED PARTIAL ROOF PLAN

A-E FIRM	USDA
PROJECT MANAGER: RPP	EPM: K. MAGEE
DESIGNER: TGT	PPM
CHECKED BY: DRL	SAFETY & HEALTH
JOB #: 3625	REAL PROPERTY

PROJECT NO.	AGRICULTURAL RESEARCH SERVICE	SHEET
	MID SOUTH AREA	A201
DATE: 2/24/2026	STONEVILLE, MS	9 OF 42

J:\greenwood\2025 Jobs\3625 USDA B7 R43 + Head House Stoneville\07 Working Folder\Arch\A201.dwg
Feb 24, 2026 - 4:07pm

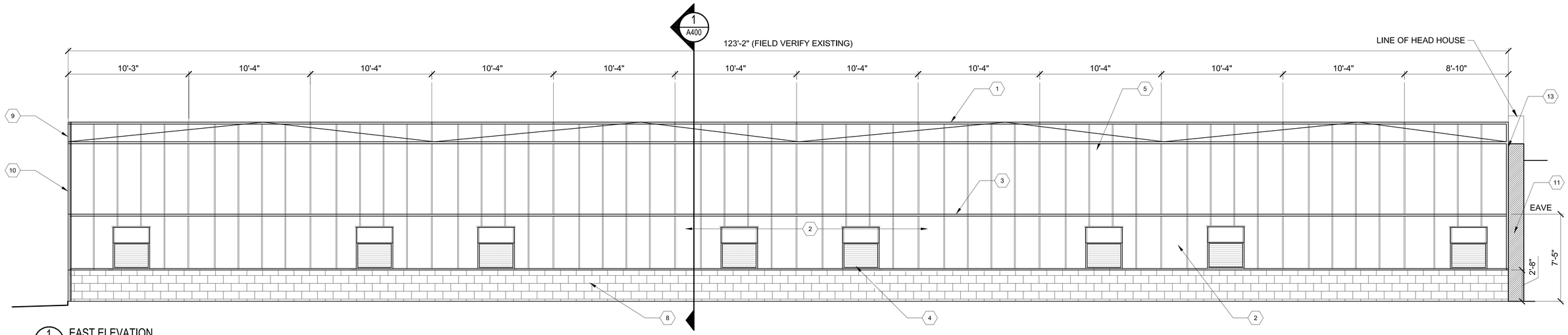

1 A300 EAST ELEVATION
SCALE: 1/4"=1'-0"

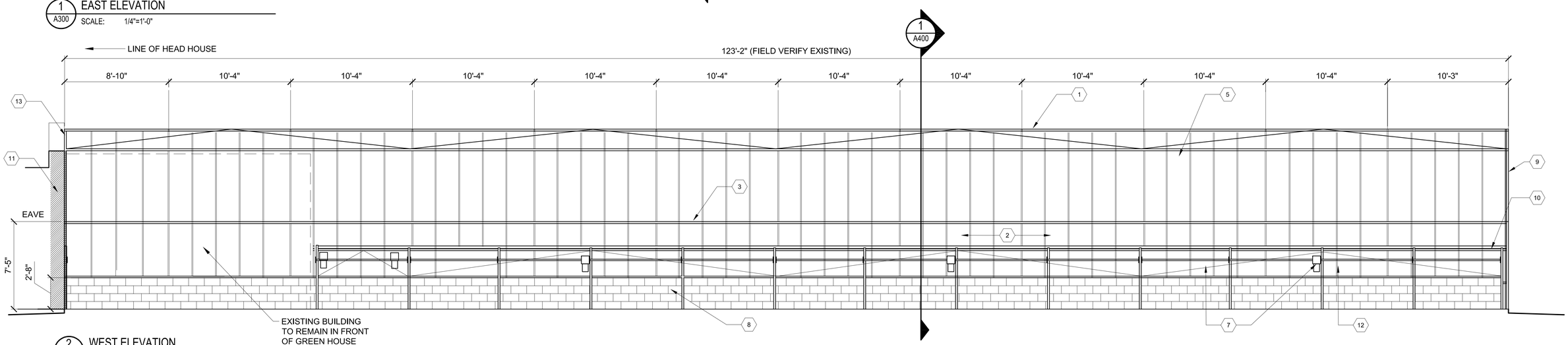

2 A300 WEST ELEVATION
SCALE: 1/4"=1'-0"

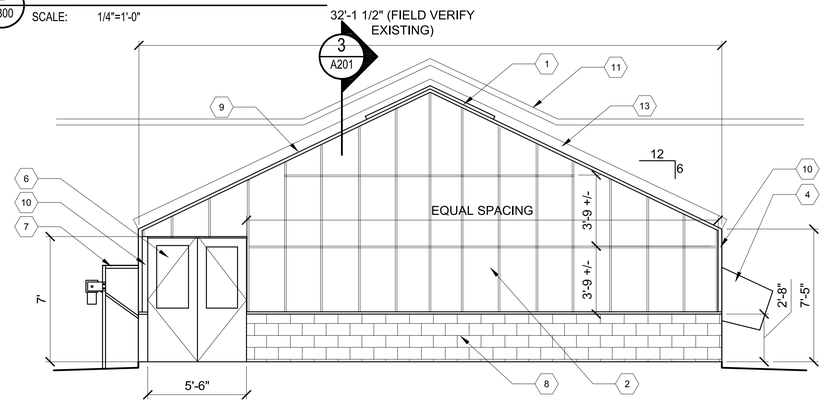

3 A300 SOUTH ELEVATION
SCALE: 1/4"=1'-0"

KEYED ELEVATION NOTES:

1. PROVIDE OPERABLE RIDGE VENT WITH 16 MIL POLYCARBONATE PANELS.
2. PROVIDE GLAZING FRAMING SYSTEM WITH 16 MIL POLYCARBONATE PANEL AT EXTERIOR.
3. EAVE TRIM
4. PROVIDE EXHAUST FAN. SEE MECHANICAL / ELECTRICAL TYPICAL OF (8).
5. PROVIDE 16 MIL POLYCARBONATE PANELS AND GLAZING SYSTEM AT ROOF.
6. PROVIDE DOOR, FRAME, AND HARDWARE.
7. PROVIDE SIDE WALL VENT OPERATOR AND ALUMINUM RACK SYSTEM.
8. PROVIDE NEW 8" CMU KNEE WALL.
9. RAKE TRIM - GREENHOUSE MANUFACTURER.
10. CORNER TRIM - GREENHOUSE MANUFACTURER.
11. EXISTING HEADHOUSE PARAPET BEYOND.
12. PROVIDE 16 MIL POLYCARBONATE PANEL AT EXTERIOR.
13. PROVIDE FLASHING AT HEAD HOUSE AS REQUIRED TO CREATE A WATER TIGHT SYSTEM OVER NEW ROOF PANELS AND GLAZING SYSTEM.

0 2' 4' 8' 12'
SCALE: 1/4"= 1'-0"

THE Johnson · M'Adams FIRM F.A.
ARCHITECTS·ENGINEERS· PLANNING· SURVEYING· MANAGEMENT
P.O. BOX 510, GREENWOOD, MISSISSIPPI - (662) 453-0461

NO.	DATE	BY	DESCRIPTION

REVISIONS

A-E FIRM	USDA
PROJECT MANAGER RPP	EPM K. MAGEE
DESIGNER TGT	PPM
CHECKED BY DRL	SAFETY & HEALTH
JOB # 3625	REAL PROPERTY

USDA Agricultural Research Service

USDA AGRICULTURAL RESEARCH SERVICE
JAMIE WHITTEN DELTA STATES RESEARCH CENTER
DESIGN TO REPLACE BLDG. 7 GREENHOUSE 3
STONEVILLE, MISSISSIPPI

ELEVATIONS

PROJECT NO.	AGRICULTURAL RESEARCH SERVICE	SHEET
DATE 2/24/2026	MID SOUTH AREA STONEVILLE, MS	A300

10 OF 42

J:\greenwood\2025 Jobs\3625 USDA B7 GH3 + Head House Stoneville\07 Working Folder\Arch\A300.dwg
Feb 24, 2026 - 10:53am

32'-1 1/2" (FIELD VERIFY EXISTING)

1 A500 TYP.

4'

4'

13'-10 1/2"

13'-10 1/2"

PROVIDE 5" ALUMINUM PURLIN PER MANUF.

PROVIDE OPERABLE RIDGE VENT WITH 16MM POLYCARBONATE PANELS WITH GLAZING SYSTEM. SEE MECHANICAL / ELECTRICAL DRAWINGS

PROVIDE SHADE SCREENS AT PLANT ROOMS AS SPECIFIED.

PROVIDE 16MM POLYCARBONATE ROOF GLAZING SYSTEM.

EXISTING GREENHOUSE STRUCTURE TO REMAIN

EXISTING GREENHOUSE STRUCTURE TO REMAIN

PROVIDE SHADE SCREENS AT PLANT ROOMS AS SPECIFIED.

PROVIDE 16MM POLYCARBONATE PANELS AND GLAZING SYSTEM @ WALLS AND PARTITIONS

COORDINATE WITH ELECTRICAL THAT THIS IS ENOUGH SPACE OR IF THEY WILL NEED ANOTHER PANEL LENGTH OF PLYWOOD. VERIFY WITH MECHANICAL THE GROW SYSTEM MOUNTING AREA.

EXISTING GREENHOUSE STRUCTURE TO REMAIN

PROVIDE 16MM POLYCARBONATE PANELS AND GLAZING SYSTEM @ WALLS AND PARTITIONS

ALUMINUM RACK SYSTEM SEE GREENHOUSE SPECIFICATIONS FOR ADDITIONAL INFORMATION

PROVIDE OPERABLE SIDE WALL VENT WITH 16MM POLYCARBONATE PANELS WITH GLAZING SYSTEM.

OPERATOR

4'-11"

2 A501 TYP.

1 A501 TYP.

TYP. HORIZONTAL JOINT REINFORCEMENT @ 16" O.C.

CONT. # 5 REBAR IN GROUT FILLED BOND BEAM

HORIZONTAL JOINT REINFORCEMENT @ 16" O.C.

2'-8"

2'-8"

NEW 8" CMU KNEE WALL W/ GROUT FILLED CELLS

8" MIN. #4 DOWELS @ 16" O.C – EPOXY INTO SLAB

CONCRETE POST FOOTING

8" MIN. #4 DOWELS @ 16" O.C – EPOXY INTO SLAB

EXISTING CONCRETE SLAB TO REMAIN

SEE MEP FOR ALL HVAC, PLUMBING AND ELECTRICAL SCOPE

2'

1'

1 A400 BUILDING SECTION

SCALE: 3/4"=1'-0"

PROVIDE 16MM POLYCARBONATE PANELS AND GLAZING SYSTEM @ WALLS AND PARTITIONS

8" CMU KNEE WALL WITH HORIZONTAL JOINT REINFORCEMENT @ 16" O.C.

PROVIDE 16MM POLYCARBONATE PANEL ROOF GLAZING SYSTEM.

8" CMU KNEE WALL WITH HORIZONTAL JOINT REINFORCEMENT @ 16" O.C.

EXHAUST FANS, SEE MECHANICAL AND ELECTRICAL

2 A400 TYPICAL PLANT ROOM INTERIOR ELEVATION

SCALE: 3/16"=1'-0"

8" CMU KNEE WALL WITH HORIZONTAL JOINT REINFORCEMENT @ 16" O.C.

3 A400 TYPICAL PLANT ROOM INTERIOR ELEVATION

SCALE: 3/16"=1'-0"

PROVIDE 16MM POLYCARBONATE PANELS AND GLAZING SYSTEM @ WALLS AND PARTITIONS

COOLING PADS SEE MECH.

8" CMU KNEE WALL WITH HORIZONTAL JOINT REINFORCEMENT @ 16" O.C.

SEE DOOR SCHEDULE

4 A400 TYPICAL PLANT ROOM INTERIOR ELEVATION

SCALE: 3/16"=1'-0"

0 1' 2' 4'

SCALE: 3/4"=1'-0"

REGISTERED ARCHITECT Rebecca P. Palmer 2514 Greenwood, MS STATE OF MISSISSIPPI 02/27/2026

THE Johnson · M'Adams FIRM F.A. ARCHITECTS·ENGINEERS· PLANNING· SURVEYING· MANAGEMENT P.O. BOX 510, GREENWOOD, MISSISSIPPI · (662) 455-0461

NO.	DATE	BY	DESCRIPTION

REVISIONS

A-E FIRM	USDA
PROJECT MANAGER RPP	EPM K. MAGEE
DESIGNER TGT	PPM
CHECKED BY DRL	SAFETY & HEALTH
JOB # 3625	REAL PROPERTY

USDA Agricultural Research Service

USDA AGRICULTURAL RESEARCH SERVICE
JAMIE WHITTEN DELTA STATES RESEARCH CENTER
DESIGN TO REPLACE BLDG. 7 GREENHOUSE 3
STONEVILLE, MISSISSIPPI

BUILDING SECTION

PROJECT NO.	AGRICULTURAL RESEARCH SERVICE	SHEET
DATE 2/24/2026	MID SOUTH AREA STONEVILLE, MS	A400 11 OF 42

J:\greenwood\2025 Jobs\3625 USDA B7 GH3 + Head House Stoneville\07 Working Folder\Arch\A400.dwg
Feb 24, 2026 - 10:56am

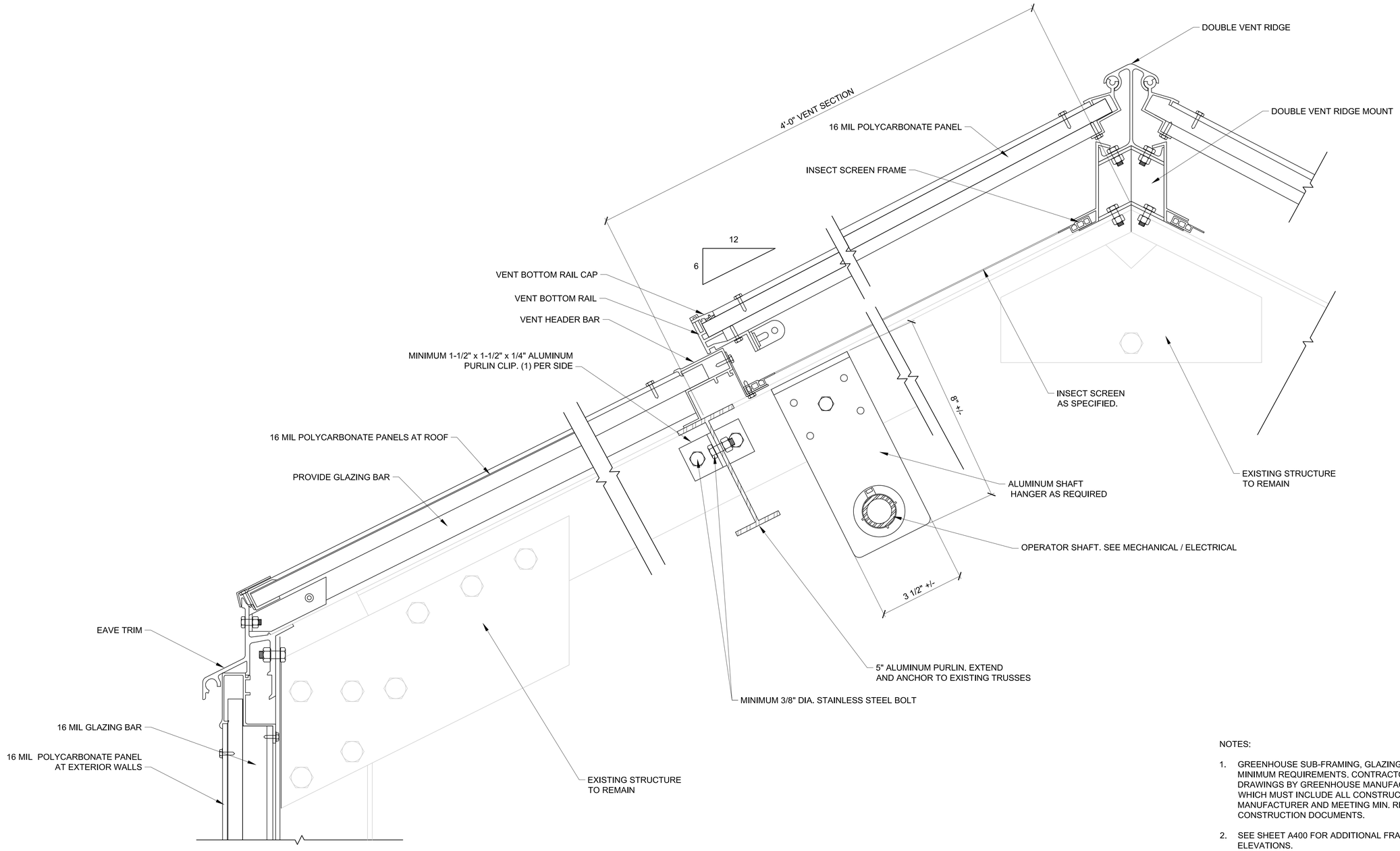

1 / A500 ROOF AND WALL SECTION

SCALE: 6"=1'-0"

NOTES:

1. GREENHOUSE SUB-FRAMING, GLAZING AND COMPONENTS ARE MINIMUM REQUIREMENTS. CONTRACTOR MUST PROVIDE SHOP DRAWINGS BY GREENHOUSE MANUFACTURER FOR APPROVAL WHICH MUST INCLUDE ALL CONSTRUCTION REQUIRED BY MANUFACTURER AND MEETING MIN. REQUIREMENTS OF CONSTRUCTION DOCUMENTS.
2. SEE SHEET A400 FOR ADDITIONAL FRAMING INFORMATION AND ELEVATIONS.

REGISTERED ARCHITECT Rebecca P. Palmer 2514 Greenwood, MS STATE OF MISSISSIPPI 2/24/26

0 1 1/2" 3" 6"

SCALE: 6"=1'-0"

THE Johnson - M'Adams FIRM: F-A
ARCHITECTS/ENGINEERS · PLANNING · SURVEYING · MANAGEMENT
P.O. BOX 513, GREENWOOD, MISSISSIPPI · (662) 453-4543

NO.	DATE	BY	DESCRIPTION

REVISIONS

A-E FIRM	USDA
PROJECT MANAGER RPP	EPM K. MAGEE
DESIGNER TGT	PPM
CHECKED BY DRL	SAFETY & HEALTH
JOB # 3625	REAL PROPERTY

USDA Agricultural Research Service

USDA AGRICULTURAL RESEARCH SERVICE
JAMIE WHITTEN DELTA STATES RESEARCH CENTER
DESIGN TO REPLACE BLDG. 7 GREENHOUSE 3
STONEVILLE, MISSISSIPPI

WALL SECTION

PROJECT NO.	AGRICULTURAL RESEARCH SERVICE	SHEET
DATE 2/24/2026	MID SOUTH AREA STONEVILLE, MS	A500 12 OF 42

J:\greenwood\2025 Jobs\3625 USDA B7 GH3 + Head House Stoneville\07 Working Folder\Arch\A500.dwg
Feb 24, 2026 – 10:59am

DOOR AND FRAME SCHEDULE

DOOR #	DOOR TYPE	DOOR SIZE WD	DOOR SIZE HGT	DOOR SIZE THK	DOOR MAT'L	FRAME TYPE	FRAME MAT'L	FRAME DETAIL	FIRE RATING LABEL	HDW SET NO	REMARKS
1	B	5'-6"	7'-0"	1 3/4"	MTL	B	MTL	4/A501	--	2	PAIR OF DOORS
2	A	3'-0"	7'-0"	1 3/4"	MTL	A	MTL	3/A501	--	1	--
3	A	3'-0"	7'-0"	1 3/4"	MTL	A	MTL	3/A501	--	1	--
4	A	3'-0"	7'-0"	1 3/4"	MTL	A	MTL	3/A501	--	1	--
5	A	3'-0"	7'-0"	1 3/4"	MTL	A	MTL	3/A501	--	1	--

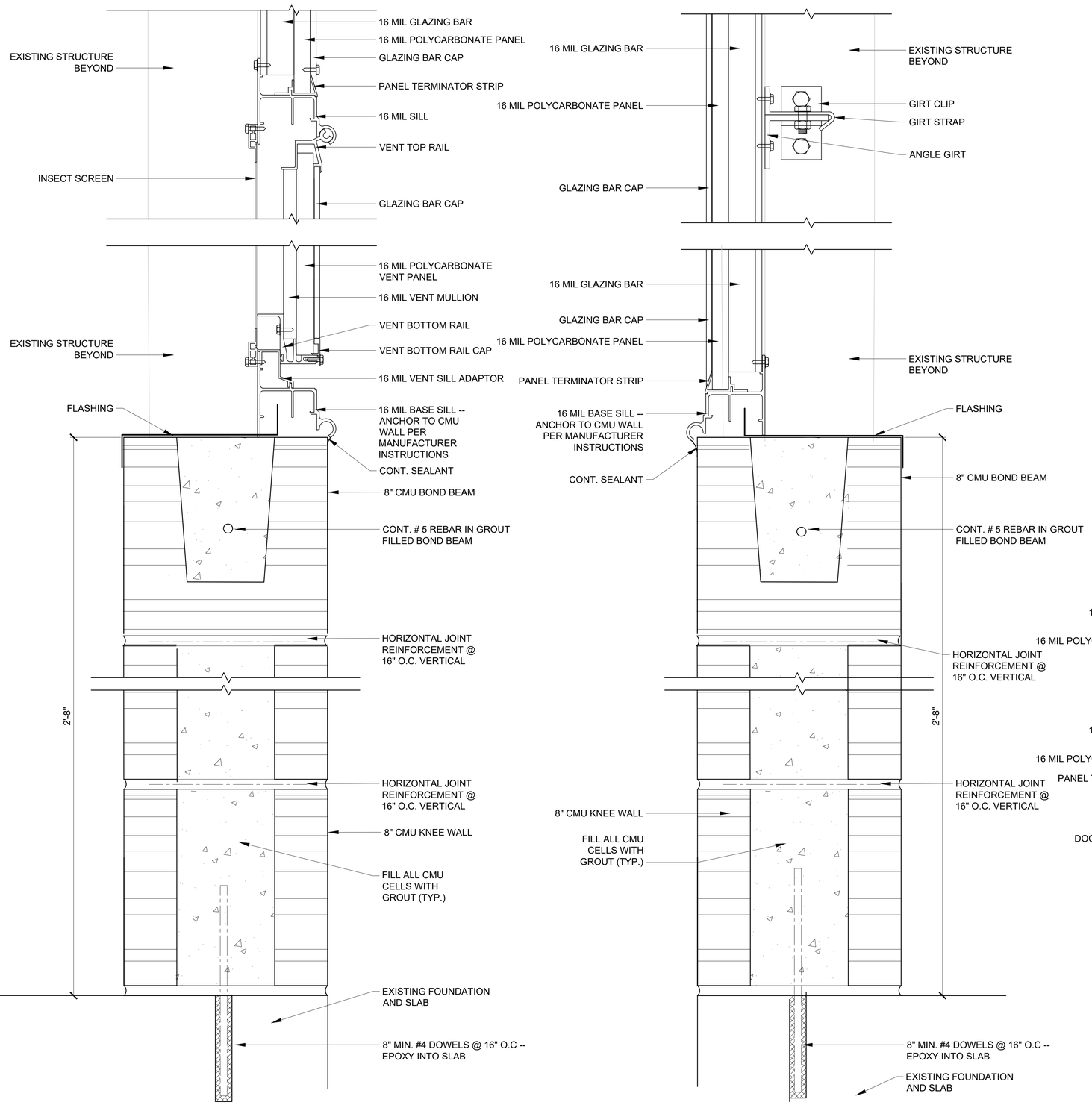

1 A501 DETAIL
SCALE: 3"=1'-0"

2 A501 DETAIL
SCALE: 3"=1'-0"

DOOR AND FRAME TYPES

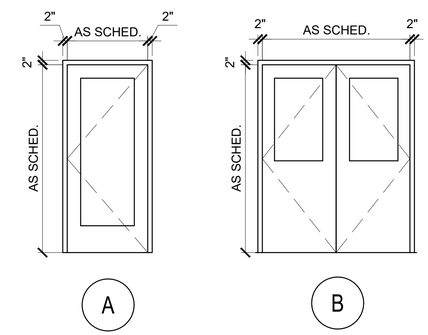

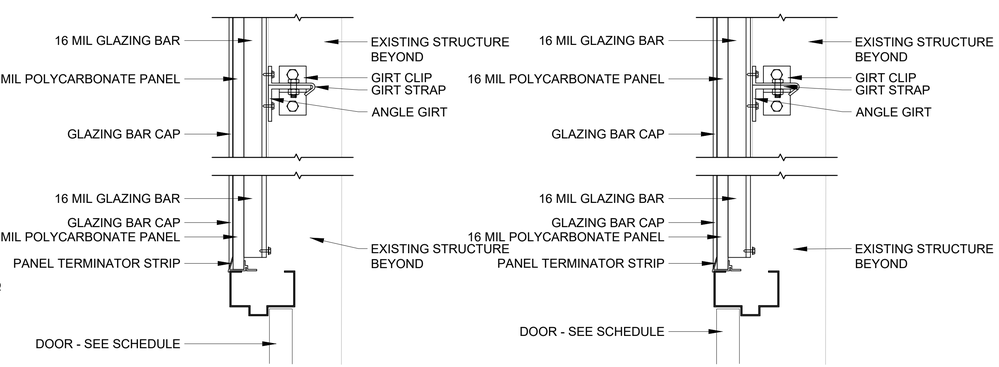

3 A501 DOOR HEAD DETAIL - INTERIOR
SCALE: 3"=1'-0"

4 A501 DOOR HEAD DETAIL - EXTERIOR
SCALE: 3"=1'-0"

0 3" 6" 1'
SCALE: 3"=1'-0"

REGISTERED ARCHITECT Rebecca P Palmer 2514 Greenwood, MS STATE OF MISSISSIPPI

THE Johnson-M'Adams FIRM P.A.
ARCHITECT / ENGINEERING / PLANNING / SURVEYING / MANAGEMENT
P.O. BOX 513, GREENWOOD, MISSISSIPPI - (662) 455-4943

NO.	DATE	BY	DESCRIPTION

REVISIONS

A-E FIRM	USDA
PROJECT MANAGER: RPP	EPM: K. MAGEE
DESIGNER: TGT	PPM
CHECKED BY: DRL	SAFETY & HEALTH
JOB #: 3625	REAL PROPERTY

USDA Agricultural Research Service

USDA AGRICULTURAL RESEARCH SERVICE
JAMIE WHITTEN DELTA STATES RESEARCH CENTER
DESIGN TO REPLACE BLDG. 7 GREENHOUSE 3
STONEVILLE, MISSISSIPPI

WALL SECTION DETAILS AND DOOR SCHEDULE

PROJECT NO.
DATE: 2/24/2026
AGRICULTURAL RESEARCH SERVICE
MID SOUTH AREA
STONEVILLE, MS
SHEET: A501
13 OF 42

J:\greenwood\2025 Jobs\3625 USDA B7 0413 + Head House Stoneville\07 Working Folder\Arch\A501.dwg
Feb 24, 2026 - 11:05am

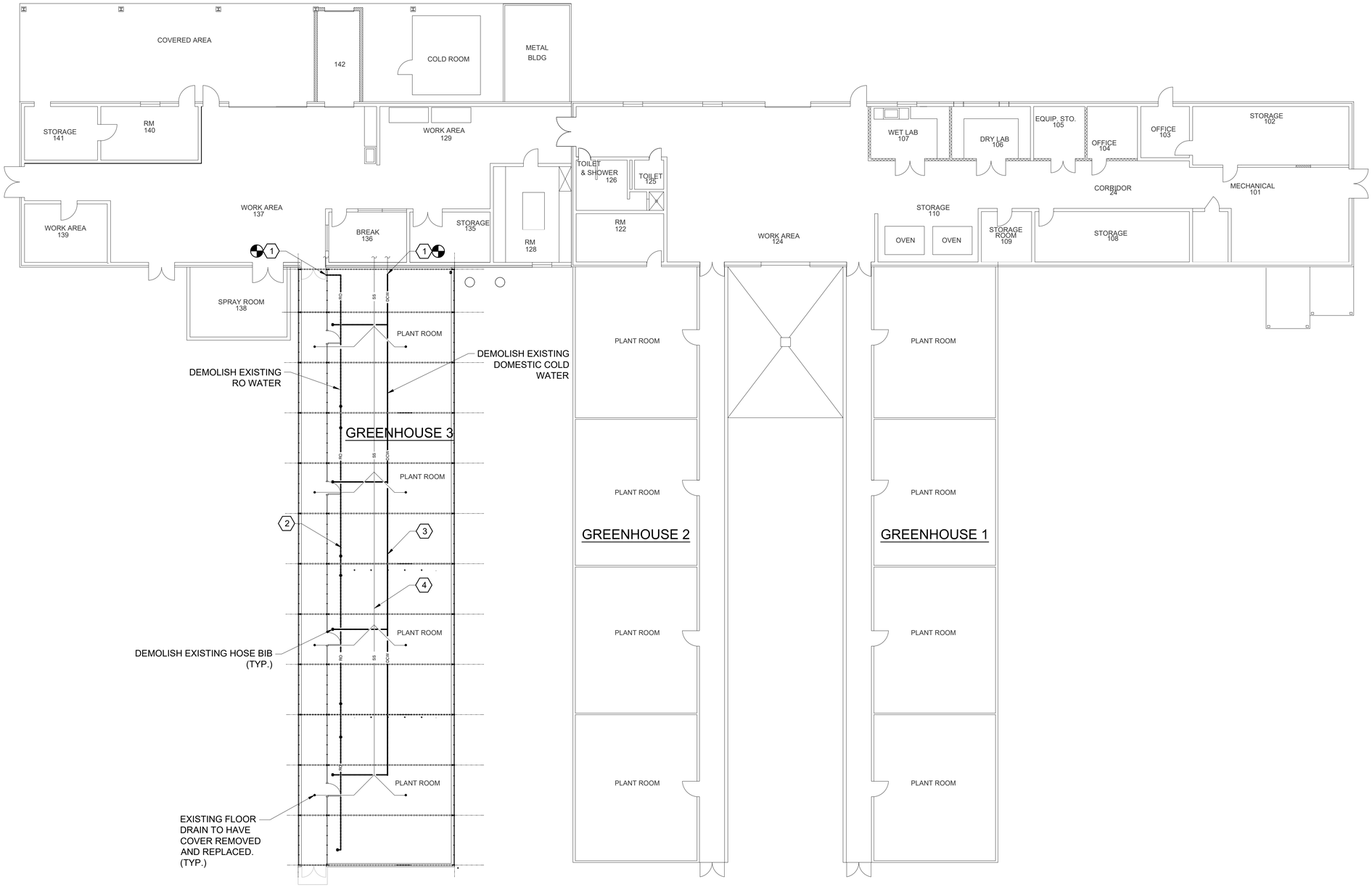

KEYED NOTES

1. EXISTING PIPING AND INSULATION UPSTREAM OF THE SHOWN POINT OF CONNECTION MUST REMAIN UNDAMAGED IN PLACE AND BE TEMPORARILY CAPPED UNTIL RECONNECTION.
2. DEMOLISH EXISTING RO WATER PIPING AND FITTINGS.
3. DEMOLISH EXISTING DOMESTIC COLD WATER PIPING AND FITTINGS.
4. EXISTING SANITARY SEWER PIPING AND FITTINGS TO REMAIN.

GENERAL NOTES

1. INTENT OF DEMOLITION IS TO REMOVE ALL EXISTING UTILITIES SERVING EXISTING GREENHOUSE #3. THIS INCLUDES, BUT IS NOT LIMITED TO, DOMESTIC WATER,RO WATER, ABOVE-GRADE SANITARY, VENT PIPING, FITTINGS, VALVES, SUPPORTS, INSULATION, AND ASSOCIATED APPURTENANCES.
2. EXISTING SANITARY SEWER PIPING LOCATED BELOW THE SLAB MUST REMAIN IN PLACE AND MUST BE REUSED TO SERVE THE RENOVATED GREENHOUSE #3. CONTRACTOR MUST PROTECT ALL EXISTING BELOW-SLAB SANITARY PIPING AND VENT CONNECTIONS DURING DEMOLITION AND CONSTRUCTION. ANY PIPING DAMAGED BY THE CONTRACTOR MUST BE REPAIRED OR REPLACED AT NO ADDITIONAL COST TO THE GOVERNMENT.
3. ALL ABOVE-GRADE SANITARY VENT PIPING MUST BE REMOVED AND REPLACED AS REQUIRED TO ACCOMMODATE THE RENOVATED GREENHOUSE CONSTRUCTION AND NEW UTILITY ROUTING.

LEGEND:

POINT OF CONNECTION/ DEMOLITION

1 PD100 PLUMBING DEMOLITION PLAN

SCALE: 3/32"=1'-0"

16' 8' 0 16'

SCALE: 3/32" = 1'-0"

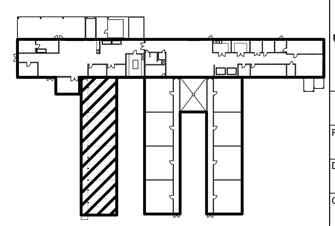

STATE OF MISSISSIPPI LICENSED PROFESSIONAL ENGINEER 31151 02/24/26

THE Johnson-M'Adams FIRM P.A. ARCHITECT/ENGINEER/PLANNER/FURNITURE/MANAGEMENT P.O. BOX 513, GREENWOOD, MISSISSIPPI - (662) 455-4943

NO.	DATE	BY	DESCRIPTION

REVISIONS

A-E FIRM	USDA
PROJECT MANAGER RPP	EPM K. MAGEE
DESIGNER SME	PPM
CHECKED BY DRL	SAFETY & HEALTH
JOB # 3625	REAL PROPERTY

USDA Agricultural Research Service

USDA AGRICULTURAL RESEARCH SERVICE
JAMIE WHITTEN DELTA STATES RESEARCH CENTER
DESIGN TO REPLACE BUILDING 7 GREENHOUSE 3
STONEVILLE, MISSISSIPPI

PLUMBING DEMOLITION PLAN

PROJECT NO.	AGRICULTURAL RESEARCH SERVICE	SHEET
DATE 2/24/2026	SOUTHEAST AREA STONEVILLE, MS	PD100 14 OF 42

J:\greenwood\2025 Jobs\3625 USDA B7 GH3 + Head House Stoneville\07 Working Folder\Mech\PD100.dwg
Feb 24, 2026 - 2:09pm

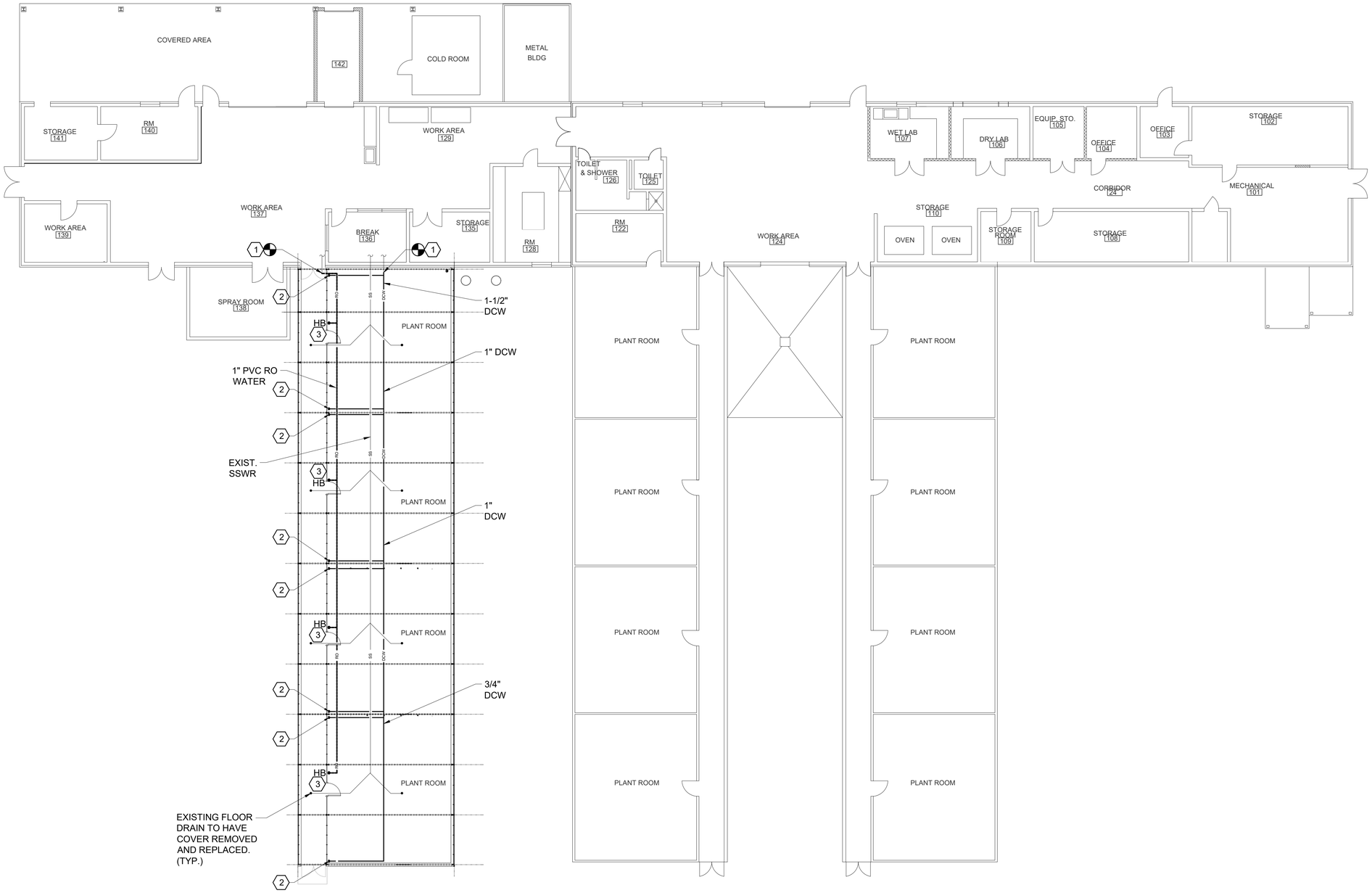

1 P100 PLUMBING PLAN
SCALE: 3/32"=1'-0"

KEYED NOTES

1. PROVIDE HAND OPERATED SHUTOFF VALVE.
2. ROUTE DCW DOWN TO SERVE EVAPORATIVE COOLING PAD . PROVIDE WITH SHUTOFF VALVE.
3. ROUTE RO PIPING DOWN BELOW EVAPORATIVE COOLING PAD AND PROVIDE HOSE BIBB FOR CONNECTION.

GENERAL NOTES

1. CONTRACTOR MUST REMOVE AND REPLACE EXISTING FLOOR DRAIN COVERS THROUGHOUT EXISTING GREENHOUSE. CONTRACTOR MUST PHYSICALLY CLEAN AND UNBLOCK AND AND ALL EXISTING GREENHOUSE SANITARY PIPING BACK TO MAIN. CONTRACTOR MUST ENSURE THAT EACH EXISTING FLOOR DRAIN LOCATED IN THE GREENHOUSE FUNCTIONS WITH NO IMPAIRMENTS THROUGHOUT THE EXISTING SANITARY SYSTEM.
2. ALL PIPING LOCATED IN GREENHOUSE MUST BE ROUTED AT ROOF STRUCTURE AND PROVIDED WITH EXTERIOR GRADE INSULATION AND UV PROTECTION SHIELDING.

LEGEND:

POINT OF CONNECTION

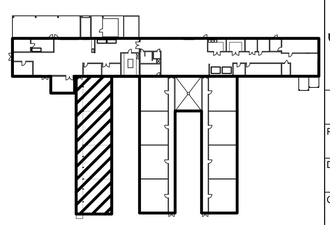

16' 8' 0 16'
SCALE: 3/32" = 1'-0"

THE Johnson • M'Adams PLLC
ARCHITECTS/ENGINEERS • PLANNERS • SURVEYING • MANAGEMENT
P.O. BOX 513, GREENWOOD, MISSISSIPPI - (662) 455-4943

NO.	DATE	BY	DESCRIPTION

REVISIONS

A-E FIRM	USDA
PROJECT MANAGER RPP	EPM K. MAGEE
DESIGNER SME	PPM
CHECKED BY DRL	SAFETY & HEALTH
JOB # 3625	REAL PROPERTY

USDA Agricultural Research Service

USDA AGRICULTURAL RESEARCH SERVICE
JAMIE WHITTEN DELTA STATES RESEARCH CENTER
DESIGN TO REPLACE BUILDING 7 GREENHOUSE 3
STONEVILLE, MISSISSIPPI
PLUMBING PLAN

PROJECT NO.	AGRICULTURAL RESEARCH SERVICE	SHEET
DATE 2/24/2026	SOUTHEAST AREA STONEVILLE, MS	P100 15 OF 42

LICENSED PROFESSIONAL ENGINEER
02/24/26
STATE OF MISSISSIPPI

J:\greenwood\2025 Jobs\3625 USDA B7 GH3 + Head House Stoneville\07 Working Folder\Mech\P100.dwg
Feb 24, 2026 – 2:09pm

PLUMBING FIXTURE SCHEDULE

MARK	DESCRIPTION	CW	HW	MIN. WASTE	MIN. TRAP	VENT	REMARKS
HB	HOSE BIBB	3/4"	-	-	-	-	PRIER C-144 ANTI-SIPHON DESIGN WALL-HYDRANT.

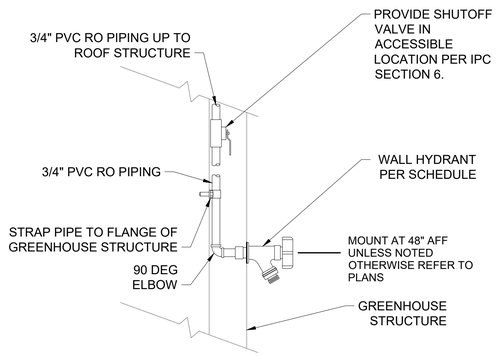

1 / P600 TYPICAL HOSE BIBB DETAIL

SCALE: N.T.S

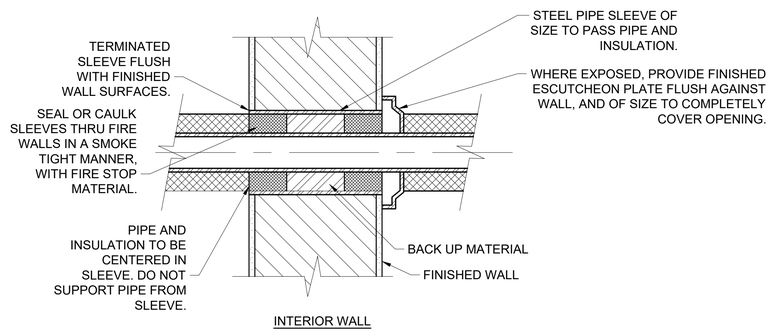

2 / P600 TYPICAL PIPE SLEEVES THROUGH WALLS

SCALE: N.T.S

THE Johnson · M'Adams FIRM P.A.
ARCHITECT·ENGINEERS • PLANNING • SURVEYING • MANAGEMENT
P.O. BOX 510, GREENWOOD, MISSISSIPPI - (662) 455-4543

NO.	DATE	BY	DESCRIPTION

REVISIONS

A-E FIRM	USDA
PROJECT MANAGER RPP	EPM K. MAGEE
DESIGNER SME	PPM
CHECKED BY DRL	SAFETY & HEALTH
JOB # 3625	REAL PROPERTY

USDA Agricultural Research Service

USDA AGRICULTURAL RESEARCH SERVICE
JAMIE WHITTEN DELTA STATES RESEARCH CENTER
DESIGN TO REPLACE BUILDING 7 GREENHOUSE 3
STONEVILLE, MISSISSIPPI

PLUMBING SCHEDULES AND DETAILS

PROJECT NO.	AGRICULTURAL RESEARCH SERVICE	SHEET
DATE 2/24/2026	SOUTHEAST AREA STONEVILLE, MS	P600 16 OF 42

J:\greenwood\2025 Jobs\3625 USDA B7 GH3 + Head House Stoneville\07 Working Folder\Mech\P600.dwg
Feb 24, 2026 - 2:09pm

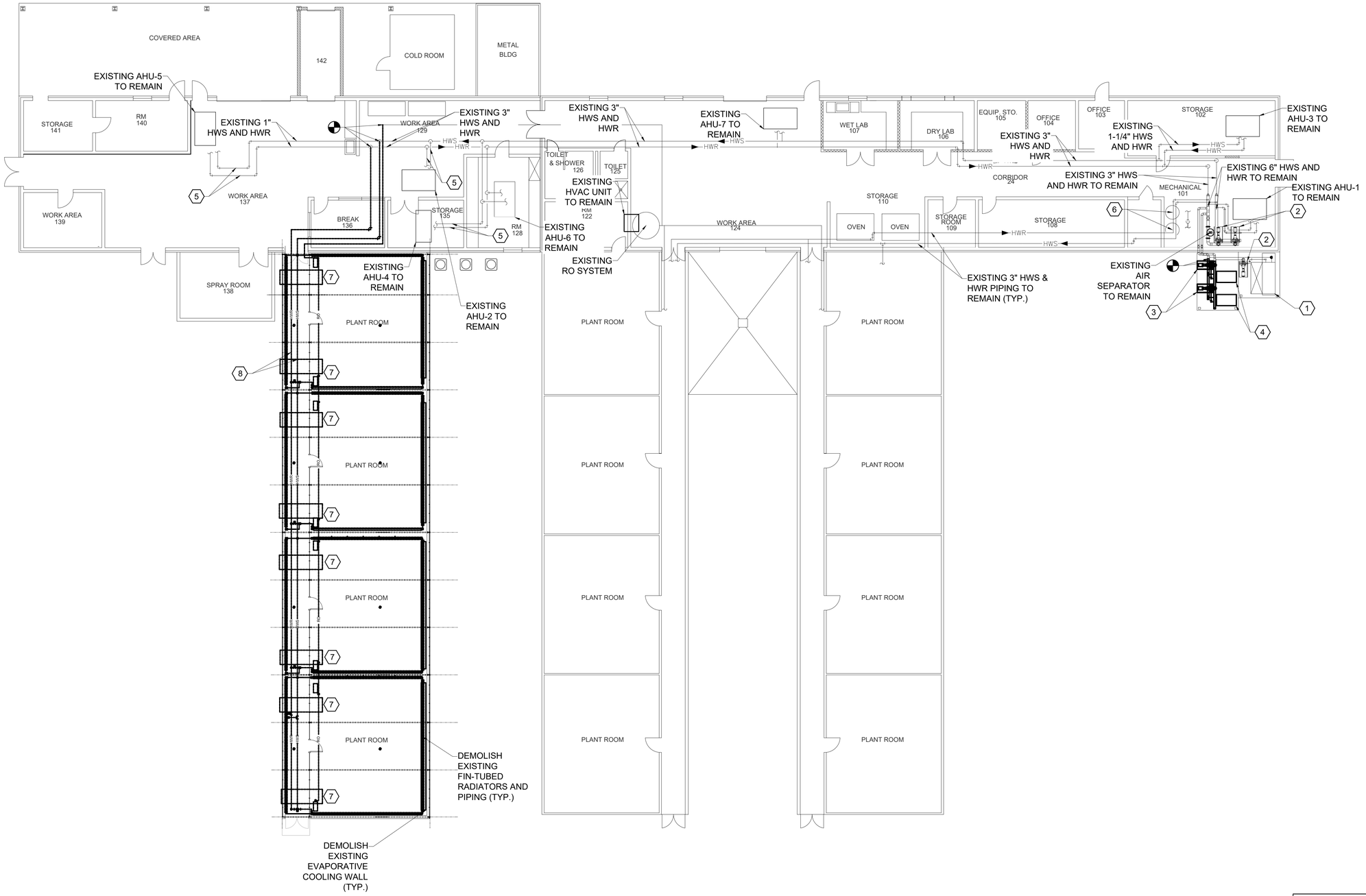

KEYED NOTES

1. EXISTING BOILER MUST REMAIN IN PLACE FOR CONTINUED USE.
2. EXISTING PUMP MUST REMAIN IN PLACE FOR CONTINUED USE.
3. DEMOLISH EXISTING PUMP AND ALL APPURTENANCES.
4. DEMOLISH EXISTING BOILER AND ALL APPURTENANCES.
5. EXISTING HYDRONIC PIPING AND INSULATION MUST BE PROTECTED FROM DAMAGE IN PLACE FOR CONTINUED USE.
6. EXISTING EXPANSION TANK MUST REMAIN IN PLACE FOR CONTINUED USE.
7. DEMOLISH EXISTING GREENHOUSE EXHAUST FAN, LOUVER, GRILLE, DUCTWORK, CONTROLS, AND ALL APPURTENANCES.
8. DEMOLISH EXISTING SUPPLY AND RETURN PIPING AND FITTINGS.

LEGEND:

POINT OF DEMOLITION

1 MD100 MECHANICAL DEMOLITION PLAN
SCALE: 3/32"=1'-0"

16' 8' 0 16'
SCALE: 3/32" = 1'-0"

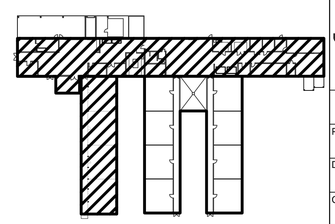

THE Johnson • McAdams FIRM F.A.
ARCHITECTS/ENGINEERS • PLANNERS • SURVEYORS • MANAGEMENT
P.O. BOX 910, GREENWOOD, MISSISSIPPI - (662) 455-9463

NO.	DATE	BY	DESCRIPTION

REVISIONS

A-E FIRM	USDA
PROJECT MANAGER RPP	EPM K. MAGEE
DESIGNER SME	PPM
CHECKED BY DRL	SAFETY & HEALTH
JOB # 3625	REAL PROPERTY

USDA Agricultural Research Service

USDA AGRICULTURAL RESEARCH SERVICE
JAMIE WHITTEN DELTA STATES RESEARCH CENTER
DESIGN TO REPLACE BUILDING 7 GREENHOUSE 3
STONEVILLE, MISSISSIPPI
MECHANICAL DEMOLITION PLAN

PROJECT NO.	AGRICULTURAL RESEARCH SERVICE	SHEET
DATE 2/24/2026	SOUTHEAST AREA STONEVILLE, MS	MD100 17 OF 42

DAVID M. ROLLINS REGISTERED PROFESSIONAL ENGINEER 02/24/26 STATE OF MISSISSIPPI

J:\greenwood\2025 Jobs\3625 USDA B7 GH3 + Head House Stoneville\07 Working Folder\Mech\MD100.dwg
Feb 24, 2026 - 2:09pm

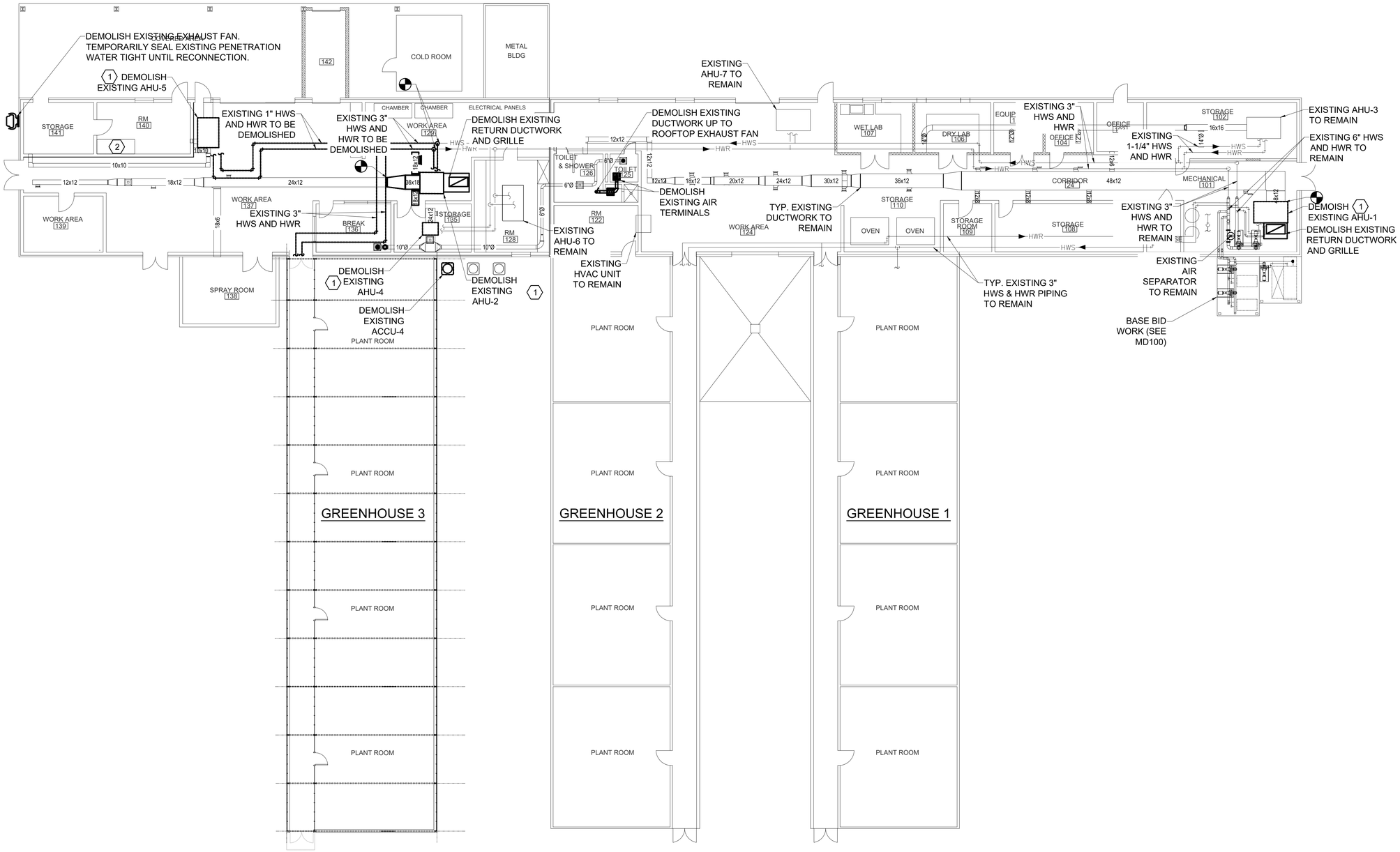

KEYED NOTES

1. DEMOLISH EQUIPMENT, THERMOSTATS, CONTROLS, ALL DUCTWORK, FITTINGS, AND ALL APPURTENANCES TO POINT SHOWN. EXISTING PIPING TO BE CAPPED FOR FUTURE CONNECTIONS. CONTRACTOR MUST PROTECT ALL EXISTING HVAC EQUIPMENT, DUCTWORK, DIFFUSERS, ETC. FROM ANY DAMAGE OR CONTAMINATION. OPEN ENDS OF ALL DUCTWORK (EXISTING AND NEW) MUST BE COVERED DURING CONSTRUCTION. CONTRACTOR MUST MECHANICALLY CLEAN ALL HVAC SYSTEM IN WORK AREA TO REMOVE ALL VISIBLE CONTAMINANTS, SUCH THAT SYSTEMS ARE CAPABLE OF PASSING NADCA CLEANING VERIFICATION TESTING STANDARDS ONCE CONSTRUCTION IS COMPLETE.
2. DEMOLISH EXISTING FUME HOOD, DUCTWORK, CONTROLS, AND ALL APPURTENANCES. DEMOLISH AND CAP ALL EXISTING UTILITIES CONNECTED TO EXISTING FUME HOOD. DEMOLISH EXISTING ASSOCIATED EXHAUST FAN LOCATED ON ROOF AND SEAL EXISTING PENETRATION WATER TIGHT. DEMOLITION OF EXISTING SYSTEM WILL REQUIRE ASBESTOS ABATEMENT.

LEGEND:

POINT OF CONNECTION

1 MD100 MECHANICAL DEMOLITION PLAN - BID OPTION #1

SCALE: 3/32"=1'-0"

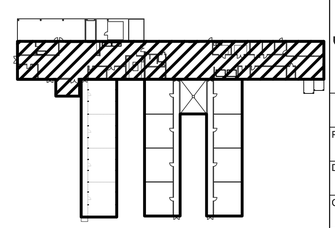

16' 8' 0 16'

SCALE: 3/32" = 1'-0"

SAMUEL E. ENGLE REGISTERED PROFESSIONAL ENGINEER 31151 02/24/26 STATE OF MISSISSIPPI

The Johnson-M^Adams PC
ARCHITECT/ENGINEER/PLANNER/SURVEYING/ENVIRONMENTAL MANAGEMENT
P.O. BOX 513, GREENWOOD, MISSISSIPPI - (662) 455-9943

NO.	DATE	BY	DESCRIPTION

REVISIONS

A-E FIRM	USDA
PROJECT MANAGER RPP	EPM K. MAGEE
DESIGNER SME	PPM
CHECKED BY DRL	SAFETY & HEALTH
JOB # 3625	REAL PROPERTY

USDA Agricultural Research Service

USDA AGRICULTURAL RESEARCH SERVICE
JAMIE WHITTEN DELTA STATES RESEARCH CENTER
DESIGN TO REPLACE BUILDING 7 GREENHOUSE 3
STONEVILLE, MISSISSIPPI

MECHANICAL DEMOLITION PLAN
BID OPTION #1

PROJECT NO.	AGRICULTURAL RESEARCH SERVICE	SHEET
DATE 2/24/2026	SOUTHEAST AREA STONEVILLE, MS	MD101 18 OF 42

L:\greenwood\2025 Jobs\3625 USDA B7 GH3 + Head House Stoneville\07 Working Folder\Mech\MD101.dwg
Feb 24, 2026 - 2:09pm

KEYED NOTES

1. DEMOLISH EXISTING FUME HOOD EXHAUST FAN LOCATED ON ROOF. EXISTING CURB MUST BE CAPPED AND SEALED WATER TIGHT.

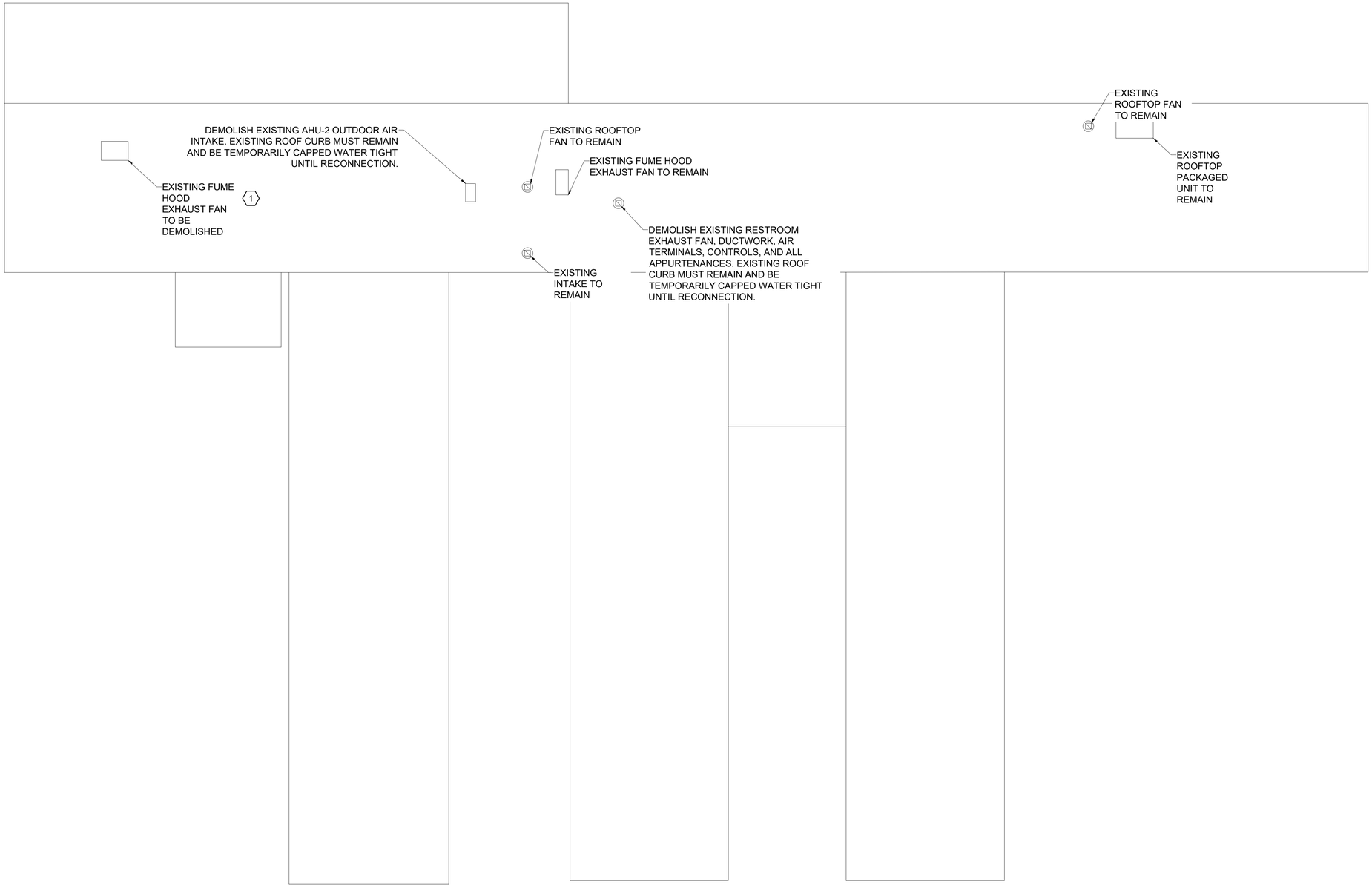

1 MD102 MECHANICAL ROOF DEMOLITION PLAN - BID OPTION #1

SCALE: 3/32"=1'-0"

16' 8' 0 16'

SCALE: 3/32" = 1'-0"

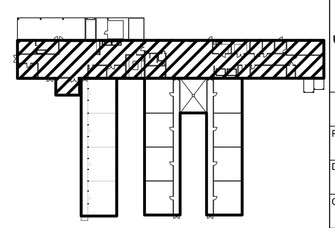

JAMES M. ENGLE REGISTERED PROFESSIONAL ENGINEER 9302 24/26 STATE OF MISSISSIPPI

THE Johnson - M'Adams FIRM P.A.
ARCHITECT·ENGINEERS • PLANNING • SURVEYING • MANAGEMENT
P.O. BOX 313, GREENWOOD, MISSISSIPPI - (662) 455-4543

NO.	DATE	BY	DESCRIPTION

REVISIONS

A-E FIRM	USDA
PROJECT MANAGER RPP	EPM K. MAGEE
DESIGNER SME	PPM
CHECKED BY DRL	SAFETY & HEALTH
JOB # 3625	REAL PROPERTY

USDA Agricultural Research Service

USDA AGRICULTURAL RESEARCH SERVICE
JAMIE WHITTEN DELTA STATES RESEARCH CENTER
DESIGN TO REPLACE BUILDING 7 GREENHOUSE 3
STONEVILLE, MISSISSIPPI

MECHANICAL ROOF DEMOLITION PLAN
BID OPTION #1

PROJECT NO.	AGRICULTURAL RESEARCH SERVICE	SHEET
DATE 2/24/2026	SOUTHEAST AREA STONEVILLE, MS	MD102 19 OF 42

J:\greenwood\2025 Jobs\3625 USDA B7 GH3 + Heat House Stoneville\07 Working Folder\Mech\MD102.dwg
Feb 24, 2026 - 2:09pm

KEYED NOTES

1. DEMOLISH EXISTING PUMP, PIPING, CONTROLS, AND ALL APPURTENANCES.
2. DEMOLISH EXISTING BOILER, PIPING, CONTROLS, AND ALL APPURTENANCES.
3. EXISTING AIR HANDLER, PIPING, CONTROLS, AND ALL APPURTENANCES TO BE DEMOLISHED UNDER BID OPTION #1.
4. DEMOLISH EXISTING HYDRONIC PIPING, HEATING EQUIPMENT, CONTROLS, AND ALL APPURTENANCES LOCATED IN GREENHOUSE.

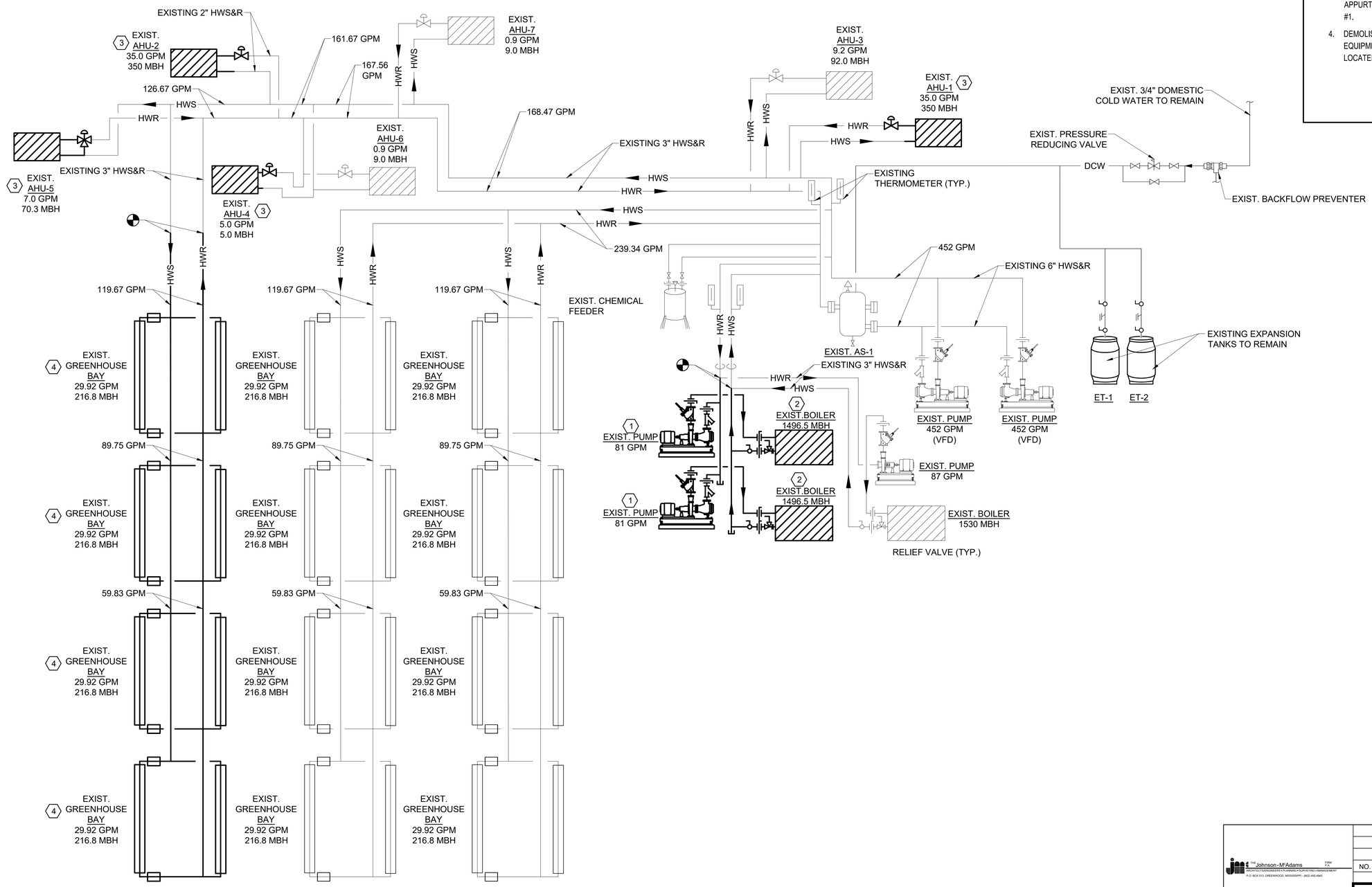

LEGEND:

POINT OF CONNECTION

1 MD800 HOT WATER PIPING DEMOLITION DIAGRAM

SCALE: NOT TO SCALE

NO.	DATE	BY	DESCRIPTION

REVISIONS

THE Johnson • McAdams PLLC
ARCHITECT/ENGINEER/PLANNING • PLUS/TREE • MANAGEMENT
P.O. BOX 910, GREENWOOD, MISSISSIPPI - (662) 455-9463

USDA Agricultural Research Service

USDA AGRICULTURAL RESEARCH SERVICE
JAMIE WHITTEN DELTA STATES RESEARCH CENTER
DESIGN TO REPLACE BUILDING 7 GREENHOUSE 3
STONEVILLE, MISSISSIPPI

HOT WATER PIPING DEMOLITION DIAGRAM

A-E FIRM	USDA
PROJECT MANAGER: RPP	EPM: K. MAGEE
DESIGNER: SME	PPM
CHECKED BY: DRL	SAFETY & HEALTH
JOB #: 3625	REAL PROPERTY

PROJECT NO.	AGRICULTURAL RESEARCH SERVICE	SHEET
DATE: 2/24/2026	SOUTHEAST AREA STONEVILLE, MS	MD800 20 OF 42

J:\greenwood\2025 John\3625 USDA B7 GH3 + Heat House Stoneville\07 Working Folder\Mech\MD800.dwg
Feb 24, 2026 - 2:09pm

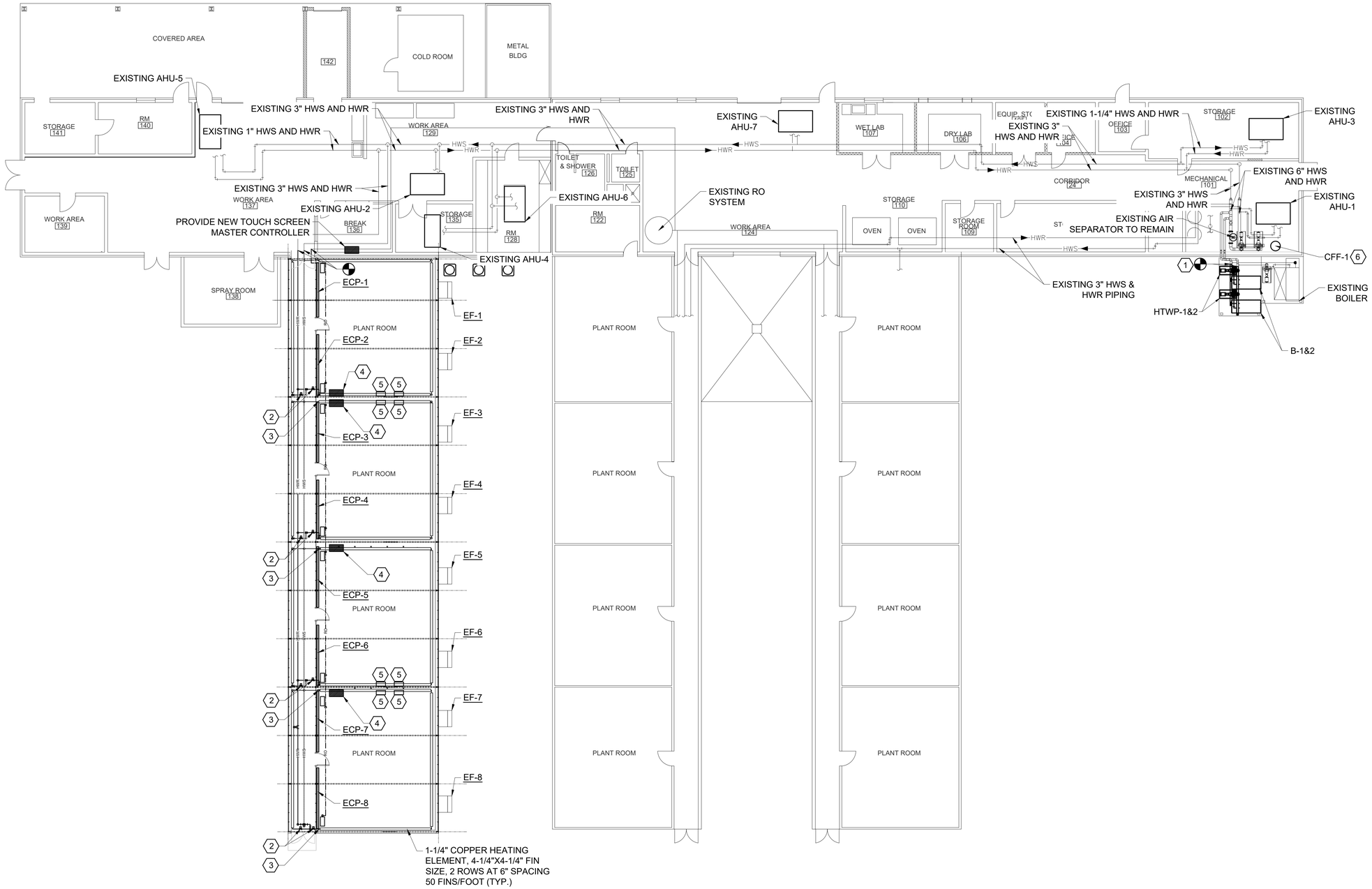

1 M100 MECHANICAL PLAN
SCALE: 3/32"=1'-0"

KEYED NOTES

1. CONNECT PIPING FROM HTWP-1&2 AND B-1&2 TO EXISTING HWS AND HWR PIPING.
2. PROVIDE MODULATING CONTROL VALVE FOR EACH GREENHOUSE BAY.
3. PROVIDE AUTOMATIC AIR VENT/BLEED VALVE.
4. PROVIDE MICRO-GROW GROW MASTER CONTROLLER SYSTEM OR APPROVED EQUAL. MASTER CONTROLLER SYSTEM MUST BE MOUNTED ON APPROXIMATELY 4'-0" X 4'-0" MARINE-GRADE PLYWOOD BASE AND MUST BE COMPLETE WITH RELAYS, CONTACTORS, ALL SENSORS, AND APPURTENANCES FOR A COMPLETE OPERATIONAL SYSTEM. PROVIDE CONTROL OF ENTIRE GREENHOUSE AND HEATING/COOLING EQUIPMENT SPECIFIED HEREIN INCLUDING EXHAUST FANS, EVAPORATIVE COOLERS, & ROOF/SIDE VENTS. SEE SHEET M600 FOR CONTROLS. TESTING: CHECK THE COMPUTERIZED CLIMATE CONTROLLER, ADJUST EQUIPMENT AND COMPUTER FOR PROPER OPERATION AND DEMONSTRATE OPERATION TO CONTRACTING OFFICER.
5. PROVIDE DRIVE UNIT AND APPURTENANCES FOR ROOF VENT FOR AUTOMATIC OPERATION OF VENT SYSTEM. PROVIDE DRIVE UNIT INCLUDING GEAR MOTOR, ROLLER BEARING PIPE HANGERS, GALVANIZED PIPE, ARM AND ROD LINKAGE, OPEN AND CLOSE LIMIT SWITCHES, SCREENS, THERMOSTAT AND OTHER COMPONENTS AS REQUIRED FOR A COMPLETE OPERATING SYSTEM WITH EMERGENCY RELEASE MECHANISM: QUICK DISCONNECT-RELEASE OF ELECTRIC-MOTOR DRIVE SYSTEM, PERMITTING MANUAL OPERATION IN THE EVENT OF OPERATING FAILURE. MOTORIZED VENT MUST BE THE FULL LENGTH OF THE GREENHOUSE BAY. INTER-COMPONENT WIRING BY THE CONTRACTOR; 110V POWER WIRING TO COMPONENTS BY ELECTRICAL. GEAR MOTORS MUST BE HIGH-STARTING-TORQUE, REVERSIBLE, CONTINUOUS-DUTY, CLASS A INSULATED, ELECTRIC MOTORS, COMPLYING WITH NEMA MG 1, WITH THERMAL-OVERLOAD PROTECTION; SIZED TO OPEN AND OPERATE SIZE AND WEIGHT OF ROOF VENT WITHOUT EXCEEDING NAMEPLATE RATINGS OR CONSIDERING SERVICE FACTOR, WITH THE FOLLOWING SPECIFICATIONS:
   - SERVICE FACTOR: ACCORDING TO NEMA MG 1, UNLESS OTHERWISE INDICATED.
   - ENCLOSURE: OPEN DRIP PROOF, UNLESS OTHERWISE INDICATED.
   - MOTORS: SINGLE PHASE, 110V, 60 HZ.
   - LIMIT SWITCHES: ADJUSTABLE SWITCHES, INTERLOCKED WITH MOTOR CONTROLS AND SET TO AUTOMATICALLY STOP ROOF VENT AT OPEN AND CLOSED POSITIONS.
6. PROVIDE CHEMICAL FILTER FEEDER CAPABLE OF INTERCONNECTION WITH EXISTING CHEMICAL SHOT SYSTEM. PROVIDE ALL SUPPORTS, WIRING, PIPING, AND ALL OTHER APPURTENANCES REQUIRED FOR A FULLY FUNCTIONING SYSTEM.

GENERAL NOTES

1. COORDINATE ALL GREENHOUSE SYSTEMS WITH GREENHOUSE MANUFACTURER.

LEGEND:

POINT OF CONNECTION

SAMUEL M. ENGLE LICENSED PROFESSIONAL ENGINEER 21515 02/24/26 STATE OF MISSISSIPPI

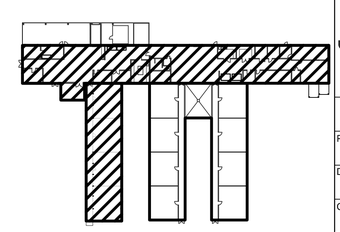

16' 8' 0 16'
SCALE: 3/32" = 1'-0"

The Johnson - M'Adams FIRM P.A.
ARCHITECT/ENGINEERS • PLANNING • SURVEYING • MANAGEMENT
P.O. BOX 515, GREENWOOD, MISSISSIPPI - (662) 455-4543

NO.	DATE	BY	DESCRIPTION

REVISIONS

A-E FIRM	USDA
PROJECT MANAGER RPP	EPM K. MAGEE
DESIGNER SME	PPM
CHECKED BY DRL	SAFETY & HEALTH
JOB # 3625	REAL PROPERTY

USDA Agricultural Research Service

USDA AGRICULTURAL RESEARCH SERVICE
JAMIE WHITTEN DELTA STATES RESEARCH CENTER
DESIGN TO REPLACE BUILDING 7 GREENHOUSE 3
STONEVILLE, MISSISSIPPI
MECHANICAL FLOOR PLAN

PROJECT NO.	AGRICULTURAL RESEARCH SERVICE	SHEET
DATE 2/24/2026	SOUTHEAST AREA STONEVILLE, MS	M100 21 OF 42

U S D A

J:\greenwood\2025 Jobs\3625 USDA B7 GH3 + Head House Stoneville\07 Working Folder\Mech\M100.dwg
Feb 24, 2026 - 2:09pm

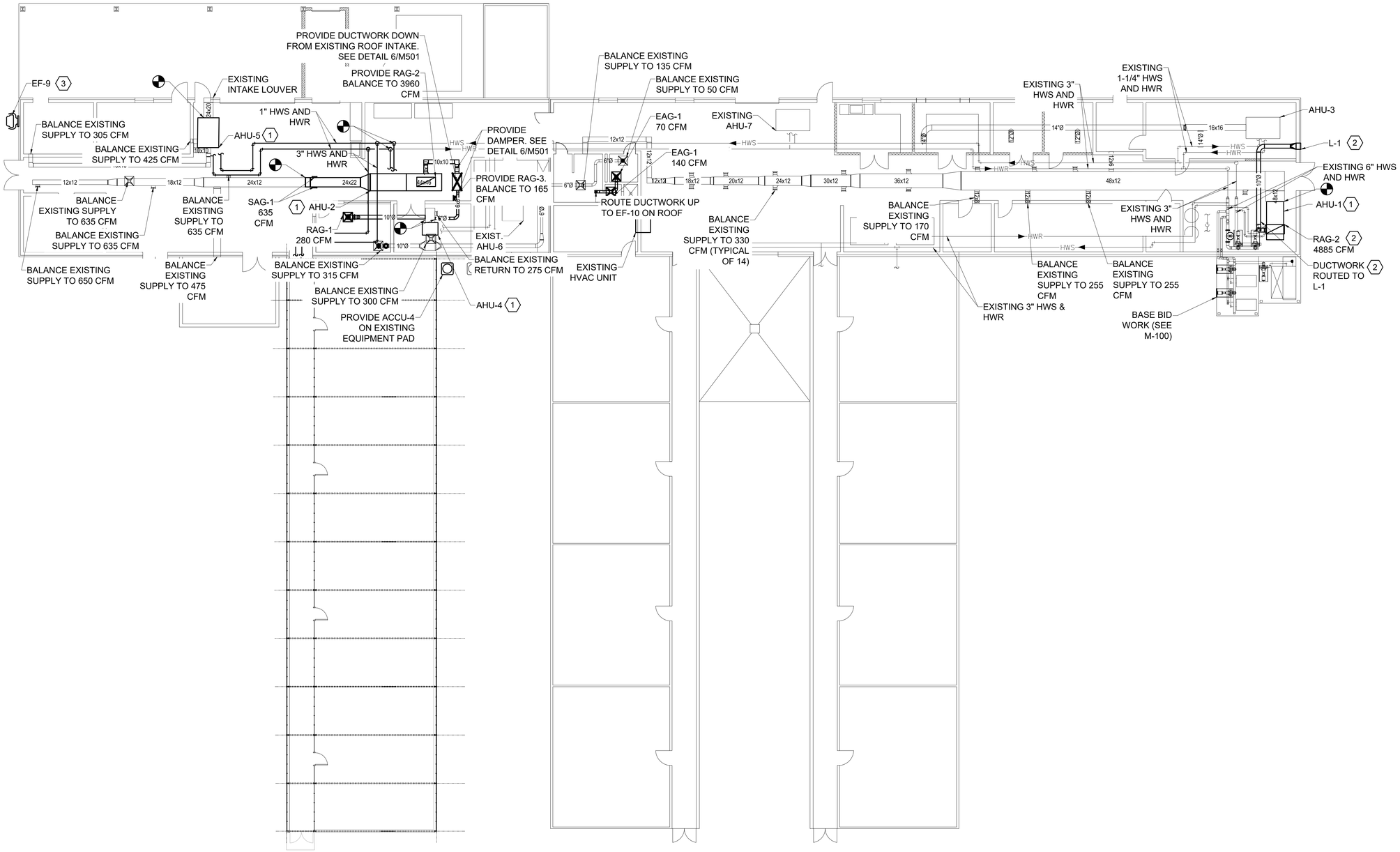

KEYED NOTES

1. PROVIDE AHU AND CONNECT TO EXISTING HOT WATER SUPPLY AND RETURN PIPING. MODIFY PIPING AS REQUIRED TO SUIT NEW HEATER LOCATION.
2. ROUTE DUCTWORK DOWN FROM AHU TO RAG-2. PROVIDE ADEQUATE SPACE TO ALLOW FOR THE CONNECTION OF THE OUTDOOR AIR DUCT ROUTED FROM L-1.
3. PROVIDE EXHAUST FAN, CONTROLS, AND ALL APPURTENANCES IN EXISTING WALL PENETRATION. CONTRACTOR MUST FIELD VERIFY EXISTING PENETRATION DIMENSIONS PRIOR TO BEGINNING OF CONSTRUCTION.

LEGEND:

POINT OF CONNECTION

1 M101 MECHANICAL PLAN BID OPTION #1

SCALE: 3/32"=1'-0"

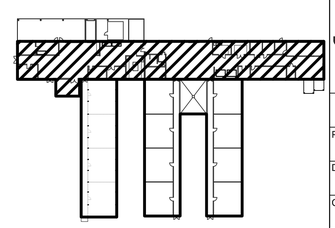

16' 8' 0 16'

SCALE: 3/32" = 1'-0"

SAMUEL M. ENGLE REGISTERED PROFESSIONAL ENGINEER 31151 STATE OF MISSISSIPPI 02/24/26

THE Johnson-M^Adams FIRM P.A. ARCHITECT/ENGINEERS • PLANNERS • SURVEYING • MANAGEMENT P.O. BOX 513, GREENWOOD, MISSISSIPPI - (662) 455-9943

NO.	DATE	BY	DESCRIPTION

REVISIONS

A-E FIRM	USDA
PROJECT MANAGER RPP	EPM K. MAGEE
DESIGNER SME	PPM
CHECKED BY DRL	SAFETY & HEALTH
JOB # 3625	REAL PROPERTY

U S D A

USDA Agricultural Research Service

USDA AGRICULTURAL RESEARCH SERVICE
JAMIE WHITTEN DELTA STATES RESEARCH CENTER
DESIGN TO REPLACE BUILDING 7 GREENHOUSE 3
STONEVILLE, MISSISSIPPI

MECHANICAL PLAN
BID OPTION #1

PROJECT NO.	AGRICULTURAL RESEARCH SERVICE	SHEET
DATE 2/24/2026	SOUTHEAST AREA STONEVILLE, MS	M101 22 OF 42

L:\greenwood\2025 Jobs\3625 USDA B7 GH3 + Head House Stoneville\07 Working Folder\Mech\M101.dwg
Feb 24, 2026 - 2:09pm

KEYED NOTES

1. PROVIDE EXHAUST FAN ON EXISTING ROOF CURB. PROVIDE ALL DUCTWORK, INSULATION, AIR TERMINALS, CONTROLS, AND ALL APPURTENANCES.
2. PROVIDE PENTHOUSE INTAKE LOUVER ON EXISTING CURB. CONTRACTOR MUST FIELD VERIFY EXISTING CURB DIMENSIONS PRIOR TO ANY CONSTRUCTION. PROVE MANUFACTURE RECOMMENDED BRACING AND FLASH SHEET METAL FROM EXISTING ROOF CURB TO PENTHOUSE LOUVER. CONTRACTOR MUST SEAL CONNECTION WATER TIGHT. SEE DETAIL 7/M501.

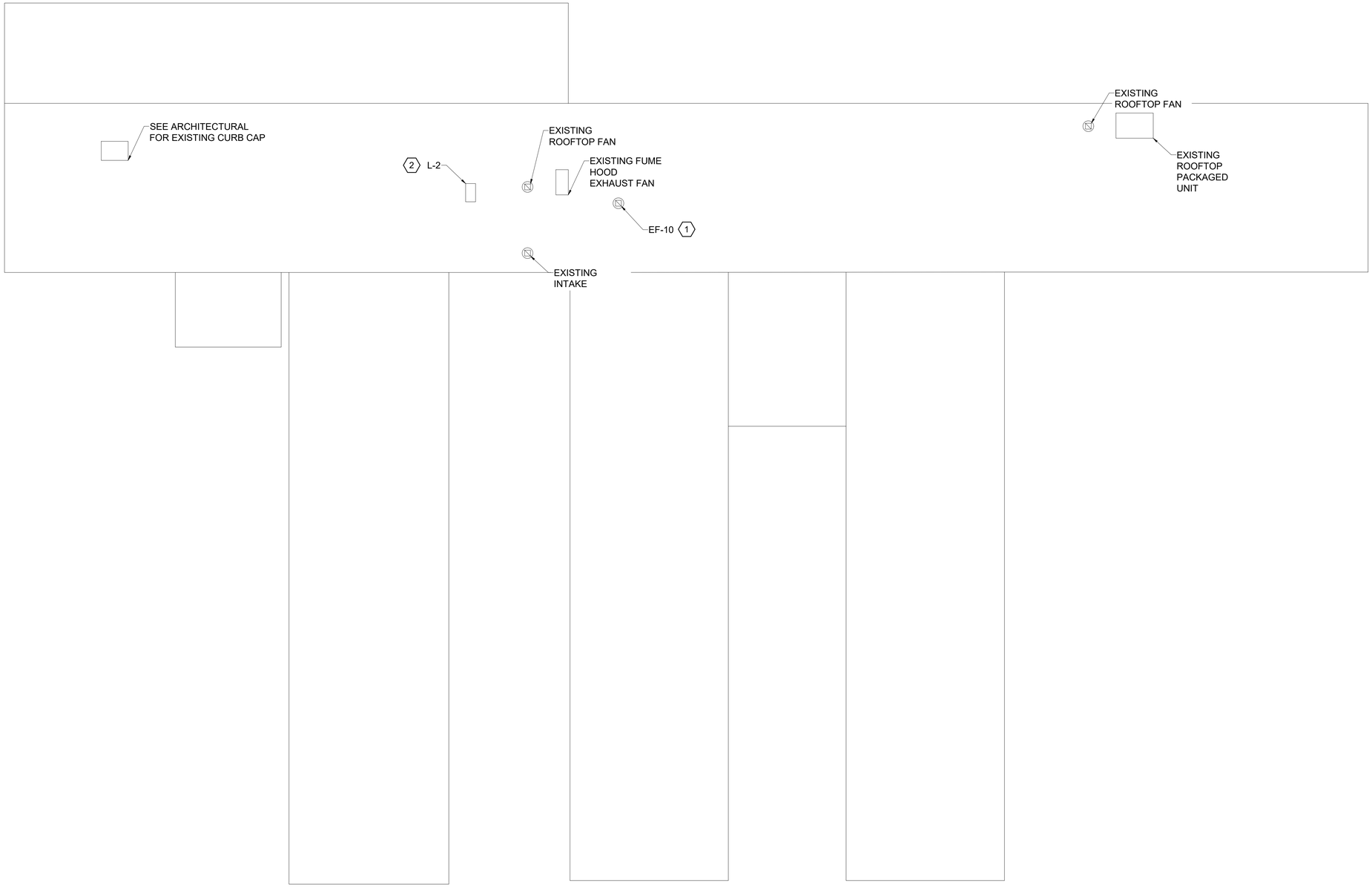

1 / M102 MECHANICAL ROOF PLAN - BID OPTION #1

SCALE: 3/32"=1'-0"

16' 8' 0 16'

SCALE: 3/32" = 1'-0"

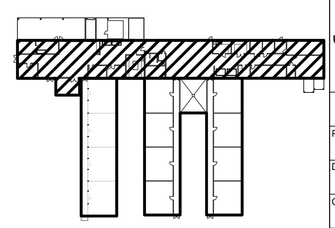

The Johnson - M'Adams FIRM P.A.
ARCHITECT/ENGINEERS • PLANNING • SURVEYING • MANAGEMENT
P.O. BOX 313, GREENWOOD, MISSISSIPPI - (662) 455-4543

NO.	DATE	BY	DESCRIPTION

REVISIONS

A-E FIRM	USDA
PROJECT MANAGER RPP	EPM K. MAGEE
DESIGNER SME	PPM
CHECKED BY DRL	SAFETY & HEALTH
JOB # 3625	REAL PROPERTY

USDA Agricultural Research Service

USDA AGRICULTURAL RESEARCH SERVICE
JAMIE WHITTEN DELTA STATES RESEARCH CENTER
DESIGN TO REPLACE BUILDING 7 GREENHOUSE 3
STONEVILLE, MISSISSIPPI

MECHANICAL ROOF PLAN
BID OPTION #1

PROJECT NO.	AGRICULTURAL RESEARCH SERVICE	SHEET
DATE 2/24/2026	SOUTHEAST AREA STONEVILLE, MS	M102 23 OF 42

J:\greenwood\2025 Jobs\3625 USDA B7 GH3 + Heat House Stoneville\07 Working Folder\Mech\M102.dwg
Feb 24, 2026 - 2:09pm

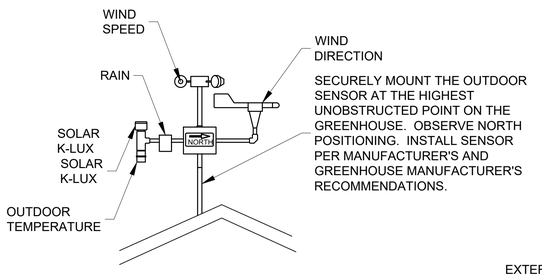

1 M500 WEATHER STATION DETAIL
SCALE: NOT TO SCALE

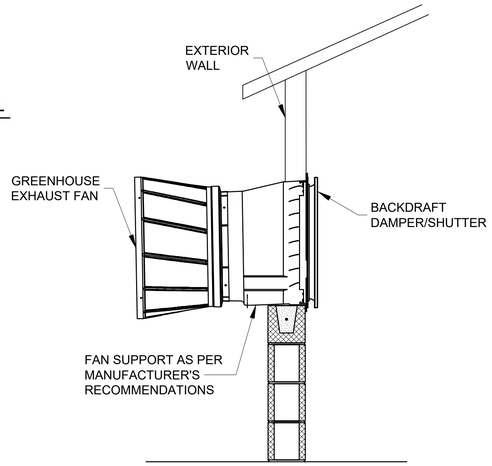

2 M500 WALL FAN MOUNTING DETAIL
SCALE: NOT TO SCALE

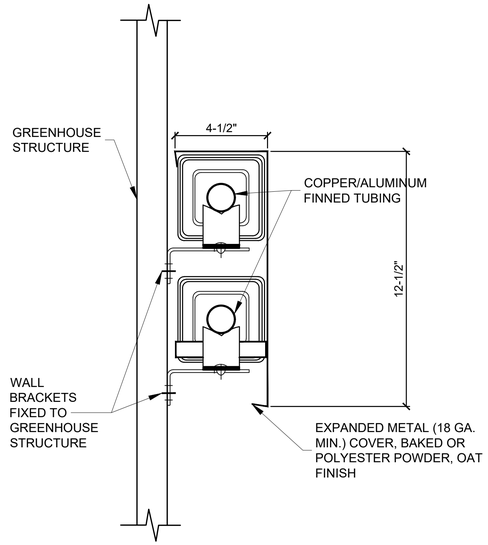

3 M500 FINNED TUBE RADIATION DETAIL
SCALE: NOT TO SCALE

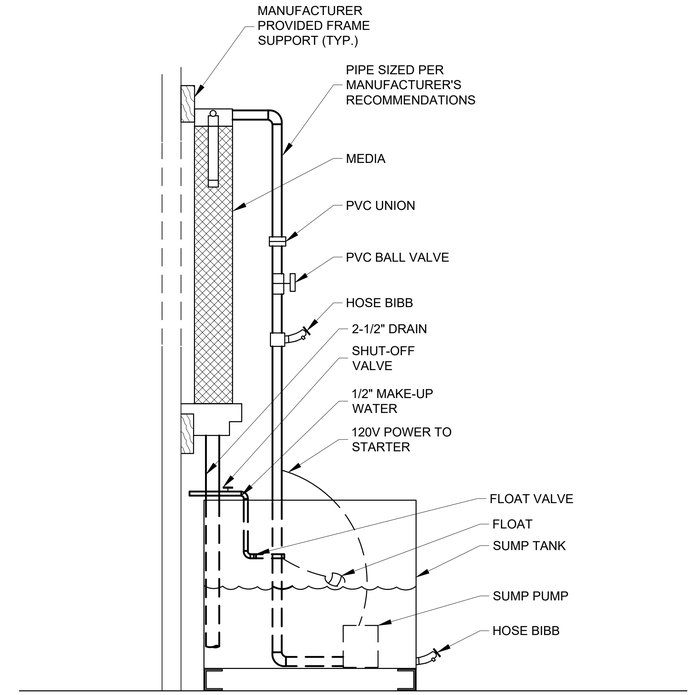

4 M500 EVAPORITIVE COOLING WALL & PUMP DETAIL
SCALE: NOT TO SCALE

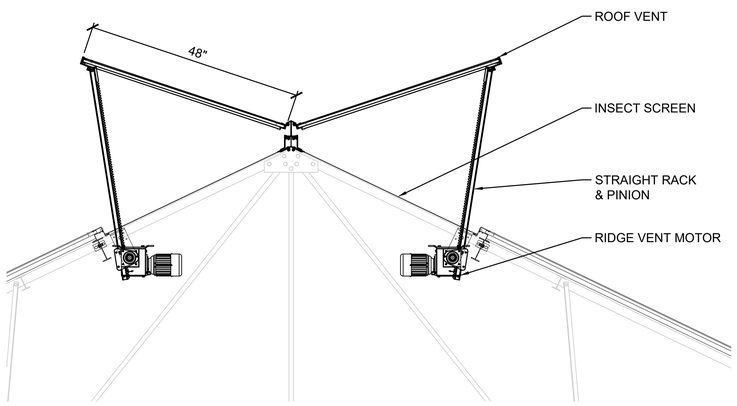

5 M500 ROOF VENT DETAIL
SCALE: NOT TO SCALE

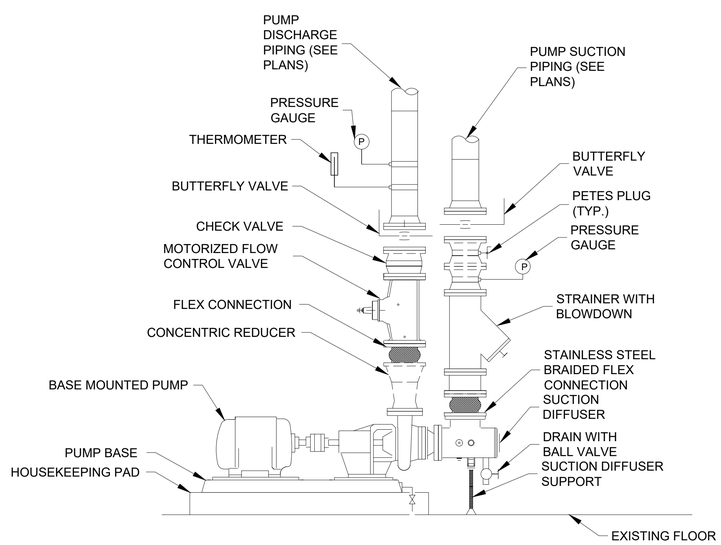

6 M500 BASE MOUNTED PUMP DETAIL
SCALE: NOT TO SCALE

The Johnson-M'Adams PC
ARCHITECT/ENGINEER/PLANNER/FIELD SERVICES/CONSTRUCTION MANAGER CERTIFIED
P.O. BOX 513, GREENWOOD, MISSISSIPPI - (662) 455-9943

NO.	DATE	BY	DESCRIPTION

REVISIONS

A-E FIRM	USDA
PROJECT MANAGER RPP	EPM K. MAGEE
DESIGNER SME	PPM
CHECKED BY DRL	SAFETY & HEALTH
JOB # 3625	REAL PROPERTY

USDA Agricultural Research Service

USDA AGRICULTURAL RESEARCH SERVICE
JAMIE WHITTEN DELTA STATES RESEARCH CENTER
DESIGN TO REPLACE BUILDING 7 GREENHOUSE 3
STONEVILLE, MISSISSIPPI
MECHANICAL DETAILS

PROJECT NO.	AGRICULTURAL RESEARCH SERVICE	SHEET
DATE 2/24/2026	SOUTHEAST AREA STONEVILLE, MS	M500 24 OF 42

J:\greenwood\2025 Jobs\3625 USDA B7 GH3 + Head House Stoneville\07 Working Folder\Mech\M500.dwg
Feb 24, 2026 - 2:09pm

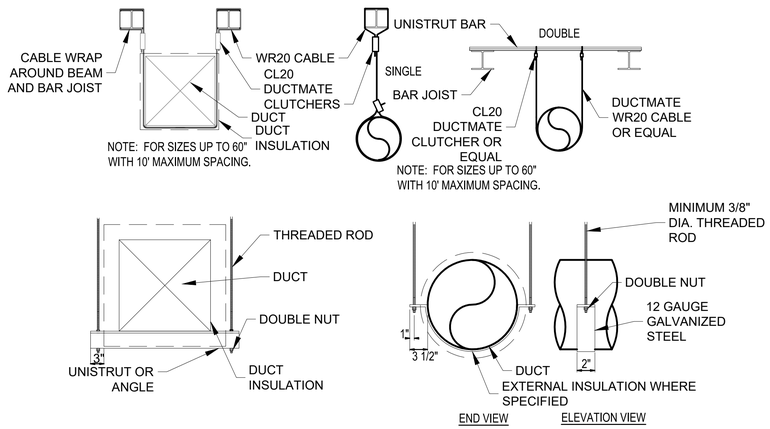

DUCT SIZE (IN.)	STRUT SIZE	ANGLE SIZE	ROD SIZE
61-72	1 5/8 X 1 5/8 X 12 GA	N/A	3/8
72-84	N/A	2 X 2 X 1/4	3/8
85-96	N/A	2 1/2 X 2 1/2 X 1/4	3/8
97-120	N/A	3 X 3 X 1/4	3/8

NOTE: 10' MAXIMUM SPACING.

1 / M501 DUCT HANGER DETAILS
SCALE: N.T.S

NOTE:
DAMPERS SHALL BE PROVIDED IN ALL BRANCH RUN-OUTS TO DIFFUSERS, R.A AND EXHAUST GRILLES, UNLESS SPECIFICALLY NOTED OTHERWISE ON DRAWINGS.
LOCATE DAMPERS SO THEY ARE ACCESSIBLE FROM LAY-IN CEILING OR ACCESS DOORS.

PROVIDE MANUAL OPPOSED DAMPER IN EACH BRANCH LINE UNLESS OTHERWISE NOTED ON DRAWINGS. DAMPERS SHALL BE INSTALLED IN ACCESSIBLE LOCATION NEAR TRUNK DUCT AND MINIMUM OF 5'-0" FROM ANY AIR INLET OR OUTLET DEVICE. COORDINATE W/ ACCESS DOORS IN NON-ACCESSIBLE CEILINGS.

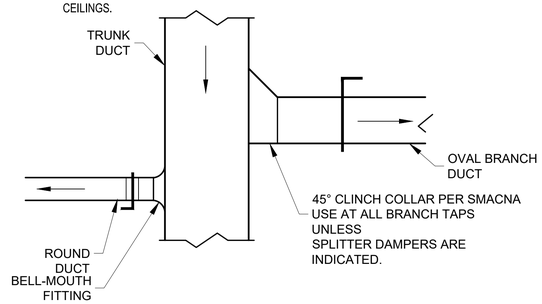

2 / M501 BRANCH DUCT TAP DETAIL
SCALE: N.T.S

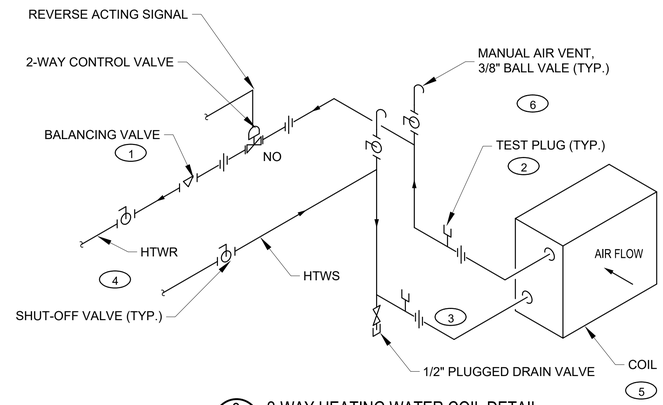

3 / M501 2-WAY HEATING WATER COIL DETAIL
SCALE: N.T.S

KEYED NOTES

1. PROVIDE BALANCING VALVE WITH MINIMUM OF 3 STRAIGHT PIPE DIAMETERS UPSTREAM AND 1 STRAIGHT PIPE DIAMETER DOWNSTREAM.
2. MAINTAIN 6" MINIMUM CLEARANCE ABOVE TEST PLUG TO ALLOW GAUGE TO BE INSERTED. DO NOT COVER PLUG WITH INSULATION.
3. PROVIDE SWING JOINTS AT COIL CONNECTIONS.
4. CONNECT BRANCH LINES FROM COIL INTO TOP OR SIDE OF SUPPLY AND RETURN MAINS. CONNECTING INTO BOTTOM OF MAIN IS NOT ACCEPTABLE.
5. PROVIDE COILS WITH INLET STRAINERS AND CAPPED HOSE CONNECTION BLOW DOWN VALVES.
6. PROVIDE MANUAL AIR VENTS IN SUPPLY AND RETURN COIL BRANCH PIPING AS FOLLOWS:
   A) IN PIPING HIGH POINT WHEN PIPING IS ABOVE MAIN.
   B) CLOSE TO COIL WHEN PIPING IS NOT ABOVE MAIN (SIDE CONNECTION).

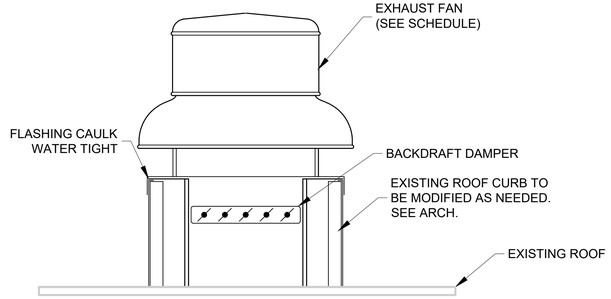

4 / M501 ROOF MOUNTED EXHAUST FAN DETAIL
SCALE: N.T.S

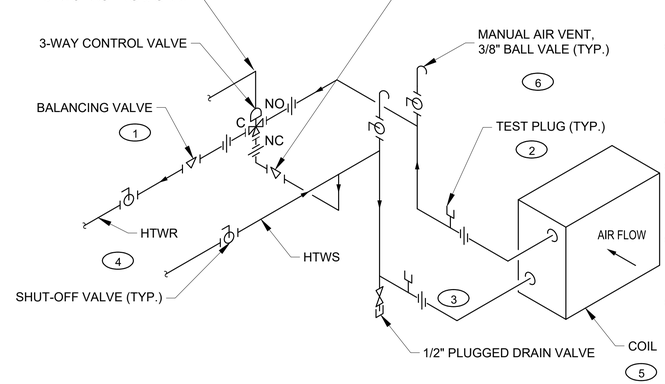

5 / M501 3-WAY HEATING WATER COIL DETAIL
SCALE: N.T.S

KEYED NOTES

1. PROVIDE BALANCING VALVE WITH MINIMUM OF 3 STRAIGHT PIPE DIAMETERS UPSTREAM AND 1 STRAIGHT PIPE DIAMETER DOWNSTREAM.
2. MAINTAIN 6" MINIMUM CLEARANCE ABOVE TEST PLUG TO ALLOW GAUGE TO BE INSERTED. DO NOT COVER PLUG WITH INSULATION.
3. PROVIDE SWING JOINTS AT COIL CONNECTIONS.
4. CONNECT BRANCH LINES FROM COIL INTO TOP OR SIDE OF SUPPLY AND RETURN MAINS. CONNECTING INTO BOTTOM OF MAIN IS NOT ACCEPTABLE.
5. PROVIDE COILS WITH INLET STRAINERS AND CAPPED HOSE CONNECTION BLOW DOWN VALVES.
6. PROVIDE MANUAL AIR VENTS IN SUPPLY AND RETURN COIL BRANCH PIPING AS FOLLOWS:
   A) IN PIPING HIGH POINT WHEN PIPING IS ABOVE MAIN.
   B) CLOSE TO COIL WHEN PIPING IS NOT ABOVE MAIN (SIDE CONNECTION).

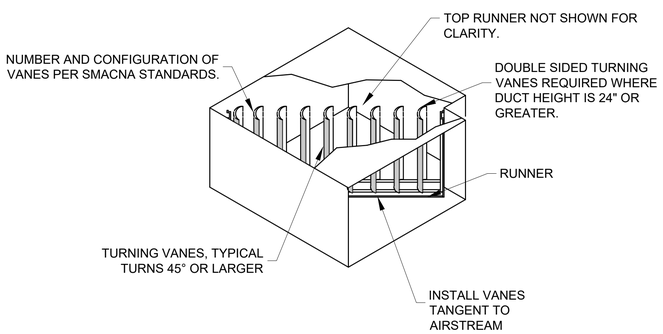

6 / M501 TURNING VANE DETAIL
SCALE: N.T.S

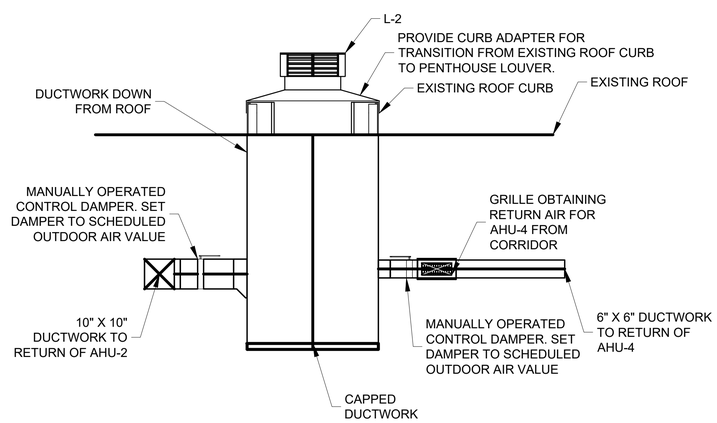

7 / M501 AHU-2 AND AHU-4 OUTDOOR AIR CONNECTION DETAIL
SCALE: N.T.S

THE Johnson • McAdams FIRM F.A.
ARCHITECT/ENGINEERING • PLANNING • SURVEYING • MANAGEMENT
P.O. BOX 910, GREENWOOD, MISSISSIPPI - (662) 455-9463

NO.	DATE	BY	DESCRIPTION

REVISIONS

A-E FIRM	USDA
PROJECT MANAGER RPP	EPM K. MAGEE
DESIGNER SME	PPM
CHECKED BY DRL	SAFETY & HEALTH
JOB # 3625	REAL PROPERTY

USDA Agricultural Research Service

USDA AGRICULTURAL RESEARCH SERVICE
JAMIE WHITTEN DELTA STATES RESEARCH CENTER
DESIGN TO REPLACE BUILDING 7 GREENHOUSE 3
STONEVILLE, MISSISSIPPI
MECHANICAL DETAILS
BID OPTION #1

PROJECT NO.	AGRICULTURAL RESEARCH SERVICE	SHEET
DATE 2/24/2026	SOUTHEAST AREA STONEVILLE, MS	M501 25 OF 42

J:\greenwood\2025 Jobs\3625 USDA B7 GH3 + Head House Stoneville\07 Working Folder\Mech\M501.dwg
Feb 24, 2026 - 2:09pm

FAN SCHEDULE

MARK	MANUFACTURER	MODEL	TYPE	AIRFLOW (CFM)	RPM	E.S.P. (IN W.G.)	DRIVE	ELECTRICAL							SONES	REMARKS
								FLA	MCA	MOP	SCCR	HP	VOLTS	PHASE		
EF-1	GREENHECK	AER-42-03-0305-VG	SIDEWALL	7,800	855	0.27"	DIRECT	13	16.2	25	5 KA	1	115	1	30	SEE NOTES
EF-2	GREENHECK	AER-42-03-0305-VG	SIDEWALL	7,800	855	0.27"	DIRECT	13	16.2	25	5 KA	1	115	1	30	SEE NOTES
EF-3	GREENHECK	AER-42-03-0305-VG	SIDEWALL	7,800	855	0.27"	DIRECT	13	16.2	25	5 KA	1	115	1	30	SEE NOTES
EF-4	GREENHECK	AER-42-03-0305-VG	SIDEWALL	7,800	855	0.27"	DIRECT	13	16.2	25	5 KA	1	115	1	30	SEE NOTES
EF-5	GREENHECK	AER-42-03-0305-VG	SIDEWALL	7,800	855	0.27"	DIRECT	13	16.2	25	5 KA	1	115	1	30	SEE NOTES
EF-6	GREENHECK	AER-42-03-0305-VG	SIDEWALL	7,800	855	0.27"	DIRECT	13	16.2	25	5 KA	1	115	1	30	SEE NOTES
EF-7	GREENHECK	AER-42-03-0305-VG	SIDEWALL	7,800	855	0.27"	DIRECT	13	16.2	25	5 KA	1	115	1	30	SEE NOTES
EF-8	GREENHECK	AER-42-03-0305-VG	SIDEWALL	7,800	855	0.27"	DIRECT	13	16.2	25	5 KA	1	115	1	30	SEE NOTES

NOTES:

1. PROVIDE WITH TWO-SPEED MOTOR AND UNIT MOUNTED STARTER.
2. PROVIDE WITH INLET MOUNTED GRAVITY SHUTTERS TO CLOSE WHEN FAN IS NOT IN OPERATION.
3. PROVIDE DRY CONTACT FOR REMOTE START/STOP OF EXHAUST FAN TO INTERFACE WITH GREENHOUSE CONTROL SYSTEM.
4. PROVIDE WITH WALL-MOUNTED SWITCH FOR ACTIVATION.

EVAPORATIVE COOLING PAD

MARK	MANUFACTURER	MODEL	LENGTH	HEIGHT	GPM	EAT		MEDIA THICKNESS	MAX. FACE VELOCITY	ELECTRICAL			REMARKS
						DB(°F)	WB(°F)			HP	VOLT	AMPS	
ECP-1	ACME OR EQUAL	KOOL-CEL CSBG	13'	3'	10.0	97	77.2	6"	200	1/3	115	2.9	SEE NOTES
ECP-2	ACME OR EQUAL	KOOL-CEL CSBG	13'	3'	10.0	97	77.2	6"	200	1/3	115	2.9	SEE NOTES
ECP-3	ACME OR EQUAL	KOOL-CEL CSBG	13'	3'	10.0	97	77.2	6"	200	1/3	115	2.9	SEE NOTES
ECP-4	ACME OR EQUAL	KOOL-CEL CSBG	13'	3'	10.0	97	77.2	6"	200	1/3	115	2.9	SEE NOTES
ECP-5	ACME OR EQUAL	KOOL-CEL CSBG	13'	3'	10.0	97	77.2	6"	200	1/3	115	2.9	SEE NOTES
ECP-6	ACME OR EQUAL	KOOL-CEL CSBG	13'	3'	10.0	97	77.2	6"	200	1/3	115	2.9	SEE NOTES
ECP-7	ACME OR EQUAL	KOOL-CEL CSBG	13'	3'	10.0	97	77.2	6"	200	1/3	115	2.9	SEE NOTES
ECP-8	ACME OR EQUAL	KOOL-CEL CSBG	13'	3'	10.0	97	77.2	6"	200	1/3	115	2.9	SEE NOTES

NOTES:

1. PROVIDE MAKE-UP WATER AS RECOMMENDED BY MANUFACTURER TO EACH COOLING WALL.
2. PROVIDE MANUFACTURER PROVIDED TANK AND PUMPING SYSTEM.
3. PROVIDE CONTROLS TO ALLOW FOR AUTOMATED EVAPORATIVE COOLING PAD DRYING EVERY 24 HOURS IN ACCORDANCE WITH MANUFACTURER'S REQUIREMENTS AND RECOMMENDATIONS.

PUMP SCHEDULE

MARK	SERVICE	FLOW	DESIGN HEAD	MOTOR POWER	MOTOR SPEED	MOTOR VOLTAGE	TYPE	BASIS OF DESIGN	FLUID	REMARKS
		GPM	FT HD	HP	RPM	V/PH				
HTWP-1	PRIMARY HOT WATER	111	25	1.5	1,800	208/3	BASE MOUNTED END SUCTION	BELL & GOSSETT, SERIES: E-1510	30% GLYCOL	SEE NOTES
HTWP-2	PRIMARY HOT WATER	111	25	1.5	1,800	208/3	BASE MOUNTED END SUCTION	BELL & GOSSETT, SERIES: E-1510	30% GLYCOL	SEE NOTES

NOTES:

1. PROVIDE WITH BUNA-N SEALS.
2. PROVIDE STRAIGHT THROUGH SUCTION DIFFUSER.
3. CONNECT BOILER TO EXISTING BOILER CONTROL PANEL IN MECHANICAL ROOM.
4. PUMPS MUST BE SUITABLE FOR OUTDOOR INSTALLATION AND CONTINUOUS EXPOSURE TO AMBIENT WEATHER CONDITIONS.
5. PUMPS, MOTORS, COUPLINGS, BEARINGS, SEALS, AND ALL ASSOCIATED COMPONENTS MUST BE RATED FOR OUTDOOR SERVICE AND MUST BE CAPABLE OF OPERATING IN FREEZING TEMPERATURES TYPICAL OF THE PROJECT LOCATION. PROVIDE WEATHERPROOF MOTOR ENCLOSURES (MINIMUM NEMA 3R UNLESS OTHERWISE REQUIRED), CORROSION-RESISTANT COATINGS, AND FREEZE PROTECTION MEASURES AS REQUIRED FOR A COMPLETE AND OPERABLE INSTALLATION.

BOILER SCHEDULE

MARK	SERVICE	FUEL	INPUT MIN./MAX.	OUTPUT MIN./MAX.	FLOW	E.W.T.	L.W.T.	ELECTRICAL				BASIS OF DESIGN	FLUID	REMARKS
			MBH	MBH	GPM	°F	°F	FLA	MCA	MOP	V/PH			
B-1	HOT WATER	N. GAS	100/1999.9	95/1900	111	165	200	7.8	9.7	20	120/1	MAGNATHERM FT 2000	30% GLCOL	SEE NOTES.
B-2	HOT WATER	N. GAS	100/1999.9	95/1900	111	165	200	7.8	9.7	20	120/1	MAGNATHERM FT 2000	30% GLCOL	SEE NOTES.

NOTES:

1. PROVIDE WITH HIGH LIMIT AQUASTAT SET FOR 200°F.
2. PROVIDE WITH PRESSURE RELIEF VALVE SET FOR 75 PSIG.
3. PROVIDE WITH FACTORY FLOW SWITCH.
4. PROVIDE WITH MANUFACTURER'S SEQUENCER CONTROL SYSTEM FOR OUTDOOR AIR RESET.
5. PROVIDE WITH MINIMUM 95% THERMAL EFFICIENCY AT FACTORY CONDITIONS AND ENERGY STAR RATING .
6. PROVIDE WITH OUTSIDE MANUFACTURER'S VENT AND INLET AIR ATTACHMENT FOR OUTDOOR INSTALLATION.
7. CONNECT BOILER TO EXISTING BOILER CONTROL PANEL IN MECHANICAL ROOM.

GREENHOUSE BAY CONTROLLER INPUT/ OUTPUT SUMMARY

	ANALOG INPUT	ANALOG OUTPUT	BINARY INPUT	BINARY OUTPUT
TEMPERATURE SENSOR	X			
HUMIDITY SENSOR	X			
FAN #1 START/STOP				X
FAN #2 START/STOP (LOW SPEED)				X
FAN #2 START/STOP (HIGH SPEED)				X
VENT WALL MOTOR (OPEN)				X
VENT WALL MOTOR (CLOSE)				X
VENT ROOF MOTOR (OPEN)				X
VENT ROOF MOTOR (CLOSE)				X
EVAPORATING COOLING WALL START/STOP				X
HEATING VALVE		X		
WALL VENT WALL OPEN LIMIT			X	
WALL VENT CLOSE WALL LIMIT			X	
ROOF VENT WALL OPEN LIMIT			X	
ROOF VENT CLOSE WALL LIMIT			X	

NOTE: PROVIDE CONTROLLERS AS REQUIRED FOR THE INPUT/OUTPUT/OUTPUT SUMMARY ABOVE.

WEATHER STATION CONTROLLER INPUT/ OUTPUT SUMMARY

	ANALOG INPUT	ANALOG OUTPUT	BINARY INPUT	BINARY OUTPUT
RAIN			X	
WIND DIRECTION	X			
WIND SPEED	X			
SOLAR K-LUX	X			
OUTDOOR TEMPERATURE	X			

NOTE: PROVIDE CONTROLLERS AS REQUIRED FOR THE INPUT/OUTPUT/OUTPUT SUMMARY ABOVE. WEATHER STATION CONTROLLER TO BE BY SAME MANUFACTURER TO GREENHOUSE BAY CONTROLLER.

SEQUENCE OF OPERATION

OCCUPIED COOLING: STEPS TO MAINTAIN ADJUSTABLE SETPOINT AS MEASURED BY TEMPERATURE SENSOR

- STEP 1: OPEN SIDE VENTS.
- STEP 2: COOLING 1 - ACTIVATE LOW SPEED OF TWO SPEED FANS.
- STEP 3: COOLING 2 - ACTIVATE HIGH SPEED OF TWO SPEED FANS.
- STEP 4: COOLING 3 - ACTIVATE EVAPORATIVE COOLING WALL SYSTEM.

HEATING: STEPS TO MAINTAIN ADJUSTABLE SETPOINT

- STEP 1: CLOSE ROOF AND SIDE VENTS.
- STEP 2: HEATING 1 - MODULATE THE NEW ELECTRONIC VALVE ACTUATOR TO MAINTAIN TEMPERATURE SETPOINT.

CONTROL SYSTEM SHALL MONITOR INDOOR AIR TEMPERATURE AND HUMIDITY, OUTDOOR AIR TEMPERATURE, RAIN CONDITIONS, WIND DIRECTION AND SPEED, AND SOLAR KLUX. CONTROL SYSTEM SHALL PROTECT GREENHOUSE VENTILATION SYSTEMS FROM HIGH WINDS AND RAIN DAMAGE. PROVIDE MANUAL OVERRIDE FOR ROOF VENTS. COORDINATION OF CONTROLS TO GROW LIGHTS SHOWN ON ELECTRICAL IS REQUIRED. PROVIDE ALL WIRING AND CONTROLS FOR A COMPLETE OPERATIONAL SYSTEM.

MICHAEL M. ENGLE
LICENSED PROFESSIONAL ENGINEER
ENGINEER
9/02/24/26
STATE OF MISSISSIPPI

THE Johnson - M'Adams FIRM P.A.
ARCHITECTS/ENGINEERS • PLANNING • SURVEYING • MANAGEMENT
P.O. BOX 510, GREENWOOD, MISSISSIPPI - (662) 455-4943

NO.	DATE	BY	DESCRIPTION

REVISIONS

USDA Agricultural Research Service

USDA AGRICULTURAL RESEARCH SERVICE
JAMIE WHITTEN DELTA STATES RESEARCH CENTER
DESIGN TO REPLACE BUILDING 7 GREENHOUSE 3
STONEVILLE, MISSISSIPPI

BASE BID
MECHANICAL SCHEDULE

A-E FIRM	USDA
PROJECT MANAGER RPP	EPM K. MAGEE
DESIGNER SME	PPM
CHECKED BY DRL	SAFETY & HEALTH
JOB # 3625	REAL PROPERTY

PROJECT NO.
DATE 2/24/2026
AGRICULTURAL RESEARCH SERVICE
SOUTHEAST AREA
STONEVILLE, MS
SHEET M600

J:\greenwood\2025 Jobs\3625 USDA B7 GH3 + Head House Stoneville\07 Working Folder\Mech\M600.dwg
Feb 24, 2026 - 2:09pm

HEATING ONLY AIR HANDLING UNIT SCHEDULE

MARK	BASIS OF DESIGN	AIRFLOW DATA							HEATING COIL											ELECTRICAL			OPER. WEIGHT (LBS)	REMARKS
		OA FLOW (CFM)	SA FLOW (CFM)	ESP (IN H2O)	TSP (IN H2O)	FAN SPEED (RPM)	FAN TYPE	MOTOR HP	CAPACITY	AIR SIDE			WATER SIDE					# ROWS	FILTER	MCA	MOP	VOLTS/ PHASE		
									TOTAL MBH	EAT °F (DB)	LAT °F (DB)	APD (IN WC)	FLUID	EWT (°F)	LWT (°F)	FLOW (GPM)	WPD (FT)							
AHU-1	GREENHECK MSX-P122-H22-D1	415	5300	1.0	1.351	1144	DIRECT	2	337.9	45	103.9	-	WATER	200	180	34.8	0.27	2	MERV 8	17	30	208/1	1098	ALL NOTES APPLY
AHU-2	GREENHECK MSX-P116-H22-MF	340	4300	1.0	1.254	1686	DIRECT	2	294.7	45	108.3	-	WATER	200	180	30.3	0.2	2	MERV 8	17	30	208/1	931	ALL NOTES APPLY
AHU-5	DAIKIN UAHF9H07	750	750	0.4	-	-	3-SPEED	0.333	62.3	22.9	99.4	-	WATER	200	180	6.0	6.14	1	MERV 8	6.3	15	208/1	385	ALL NOTES APPLY

NOTES:
1. ALL UNITS TO BE DOUBLE WALL WITH HINGED ACCESS DOORS.
2. EQUIPMENT SHALL COMPLY "BUY AMERICAN ACT". EQUIPMENT SHOWN IN SCHEDULE TO ESTABLISH A STANDARD OF QUALITY, NOT TO LIMIT COMPETITION. EQUIVALENT EQUIPMENT BY OTHER MANUFACTURER'S SHALL BE ACCEPTABLE.
3. MODIFY EXISTING PIPING AND DUCTWORK AS NEEDED FOR CONNECTION TO NEW EQUIPMENT.

AIR HANDLING UNIT SCHEDULE

MARK	BASIS OF DESIGN	AIRFLOW DATA							DX COOLING COIL						HEATING COIL										ELECTRICAL			OPER. WEIGHT (LBS)	REMARKS
		OA FLOW (CFM)	SA FLOW (CFM)	ESP (IN H2O)	TSP (IN H2O)	FAN SPEED (RPM)	FAN TYPE	MOTOR HP	CAPACITY		EAT °F (DB)	EAT °F (WB)	LAT °F (DB)	LAT °F (WB)	CAPACITY	AIR SIDE		WATER SIDE				# ROWS	DRAIN (INCH)	FILTER	MCA	MROPD	VOLTS/ PHASE		
									TOTAL BTU/HR	SENS. BTU/HR					TOTAL MBH	EAT °F (DB)	LAT °F (DB)	FLUID	EWT (°F)	LWT (°F)	FLOW (GPM)	WPD (FT)							
AHU-4	DAIKIN BCHD0101	55	800	1.0	1.56	1339	DIRECT DRIVE	1/2	36995	24503	81.2	67.8	53.2	52.7	71.8	45	127.0	WATER	200	180	7.4	13.9	1	3/4"	MERV 8	5.2	15	208/1	397	ALL NOTES APPLY

NOTES:
1. ALL UNITS TO BE DOUBLE WALL WITH HINGED ACCESS DOORS.
2. EQUIPMENT SHALL COMPLY "BUY AMERICAN ACT". EQUIPMENT SHOWN IN SCHEDULE TO ESTABLISH A STANDARD OF QUALITY, NOT TO LIMIT COMPETITION. EQUIVALENT EQUIPMENT BY OTHER MANUFACTURER'S SHALL BE ACCEPTABLE.
3. MODIFY EXISTING PIPING AND DUCTWORK AS NEEDED FOR CONNECTION TO NEW EQUIPMENT.

AIR COOLED CONDENSING UNIT SCHEDULE

MARK	LOCATION	BASIS OF DESIGN	TYPE	NOMINAL SIZE (TONS)	SEER2 RATING	CONDENSER AMBIENT	REFRIGERANT TYPE	VOLTS/ PHASE	OPER. WEIGHT (LBS)	MCA	MOCP	REMARKS
ACCU-4	OUTDOOR	DAIKIN	COOLING ONLY	4.0	13.4	105	R-32	208/3	183	16.6	25	SEE NOTES

NOTES:
1. PROVIDE WITH MANUFACTURER PROVIDE LINE SET AND INSULATION.
2. EXTERIOR PIPING INSULATION MUST BE COVERED BY ALUMINUM JACKETING.

CHEMICAL FILTER FEEDER (CFF-1)

NOTES:
1. PROVIDE ONE (1) FILTER FEEDER FOR THE HEATING WATER LOOP WITH THE CAPABILITY TO INTEGRATE WITH THE EXISTING SHOT FEEDER.
2. BASIS OF DESIGN - JL WINGERT 5HD
3. FURNISH AND INSTALL A PACKAGED, CHEMICAL FILTER FEEDER UNIT FOR DISPENSING PRE-MIXED CHEMICAL TREATMENT TO MAINTAIN CONSTANT MIXTURE IN HEATING WATER LOOP.
4. THE UNIT MUST CONSIST OF A BASE, 5 GALLON CAPACITY (MAXIMUM) FILTER FEEDER.

EXHAUST FAN SCHEDULE

MARK	BASIS OF DESIGN	FAN DATA						ELECTRICAL DATA					CONTROL INTERLOCKS		OPER. WEIGHT (LBS)	REMARKS
		CFM	S.P.	DRIVE	FAN TYPE	RPM	MAX SONES	POWER HP	VOLTS/ PHASE	FLA	MCA	MOP	SWITCH	OTHER AS NOTED		
EF-9	GREENHECK CUBE-120-4	800	0.5	BELT	CENTRIFUGAL	1048	7.1	1/4	115/1	5.8	7.25	15	NO	CONSTANT	76	ALL
EF-10	GREENHECK CUE-070-VG	210	0.2	DIRECT	CENTRIFUGAL	1313	2.9	1/60	115/1	1.3	1.6	15	NO	CONSTANT	38	1,3

NOTES:
1. PROVIDE WITH MAGNETIC MOTOR STARTER WITH COIL VOLTAGE MATCHING OUTPUT OF THE BUILDING MANAGEMENT SYSTEM. PROVIDE POWER TRANSFORMERS AS REQUIRED.
2. PROVIDE SPARK B RESISTANT EXPLOSION PROOF FANS.
3. EXHAUST FAN MUST OPERATE CONTINUOUSLY.

AIR TERMINALS SCHEDULE

MARK	SYSTEM	DESCRIPTION	GRILLE SIZE	NECK SIZE	MATERIAL	COLOR	MAX PRESSURE DROP (in-wg)
RAG-1	RETURN	CEILING MOUNTED	24" x 24"	10"	ALUMINUM	MATCH CEILING	0.09
RAG-2	RETURN	CEILING MOUNTED	48" x 24"	48" x 24"	ALUMINUM	MATCH CEILING	0.09
RAG-3	RETURN	DUCT MOUNTED	10" x 4"	10" x 4"	ALUMINUM	MATCH DUCT	0.09
SAG-1	SUPPLY	DUCT MOUNTED	12" x 10"	12" x 10"	ALUMINUM	MATCH DUCT	0.09
EAG-1	EXHAUST	CEILING MOUNTED	24" x 24"	10"	ALUMINUM	MATCH CEILING	0.09

LOUVER SCHEDULE

MARK	DESCRIPTION	APPLICATION	WIDTH (IN)	HEIGHT (IN)	DEPTH (IN)	FREE AREA (SF)	VOLUME (CFM)	PRESSURE DROP (IN WG)	FREE AREA VELOCITY (FPM)	BEGINNING POINT OF WATER PENETRATION, BPWP (FPM)	BASIS OF DESIGN MAKE	BASIS OF DESIGN MODEL	REMARKS
L-1	3" DRAINABLE	OUTSIDE AIR INTAKE	16	16	3	0.5	415	0.12	841	1250	GREENHECK	EVH-302	ALL

NOTES:
1. PROVIDE LOUVER WITH ALUMINUM INSECT SCREEN.
2. INTAKE LOUVERS SHALL NOT BE SIZED FOR ANY MORE THAN 80% OF THE LOUVER MANUFACTURER'S BPWP RATING.

PENTHOUSE LOUVER SCHEDULE

MARK	DESCRIPTION	APPLICATION	WIDTH (IN)	HEIGHT (IN)	LENGHT (IN)	THROAT AREA (SF)	VOLUME (CFM)	PRESSURE DROP (IN WG)	THROAT AREA VELOCITY (FPM)	BEGINNING POINT OF WATER PENETRATION, BPWP (FPM)	BASIS OF DESIGN MAKE	BASIS OF DESIGN MODEL	REMARKS
L-2	PENTHOUSE	OUTSIDE AIR INTAKE	26	24	26	1	395	0.06	395	800	GREENHECK	ESD-635PD	ALL

NOTES:
1. PROVIDE LOUVER WITH ALUMINUM INSECT SCREEN.
2. INTAKE LOUVERS SHALL NOT BE SIZED FOR ANY MORE THAN 80% OF THE LOUVER MANUFACTURER'S BPWP RATING.

THE Johnson • McAdams FIRM P.A.
ARCHITECTS/ENGINEERS/PLANNERS • BUILDING • MANAGEMENT
P.O. BOX 910, GREENWOOD, MISSISSIPPI - (662) 455-9463

NO.	DATE	BY	DESCRIPTION

REVISIONS

A-E FIRM	USDA
PROJECT MANAGER RPP	EPM K. MAGEE
DESIGNER SME	PPM
CHECKED BY DRL	SAFETY & HEALTH
JOB # 3625	REAL PROPERTY

USDA Agricultural Research Service

USDA AGRICULTURAL RESEARCH SERVICE
JAMIE WHITTEN DELTA STATES RESEARCH CENTER
DESIGN TO REPLACE BUILDING 7 GREENHOUSE 3
STONEVILLE, MISSISSIPPI

MECHANICAL SCHEDULE AND DETAILS
BID OPTION #1

PROJECT NO.	AGRICULTURAL RESEARCH SERVICE	SHEET
DATE 2/24/2026	SOUTHEAST AREA STONEVILLE, MS	M601 27 OF 42

J:\greenwood\2025 Jobs\3625 USDA B7 GH3 + Head House Stoneville\07 Working Folder\Mech\M601.dwg
Feb 24, 2026 - 2:09pm

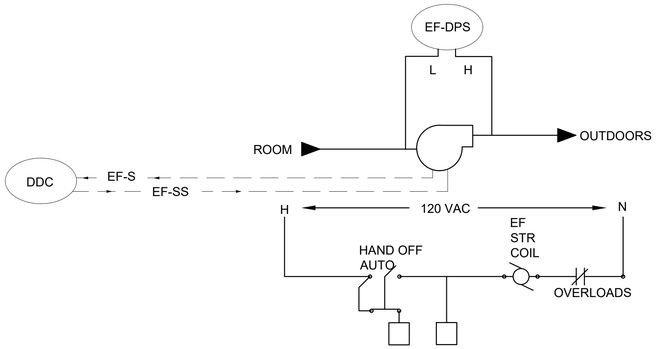

SEQUENCE OF OPERATION

EXHAUST FAN MUST BE IN OPERATION CONTINUOUSLY.

						ALARMING	
FUNCTION	POINT NAME	DESCRIPTION	SETTING (WITH UNITS)	RANGE (WITH UNITS)	IO TYPE	ALARM CONDITION (SEE NOTES)	ALARM PRIORITY
PROOFS & SAFETIES	EF-S	EXHAUST FAN STATUS		ON/OFF	BI	EXHAUST FAN FAILED TO START	INFO
START/STOP	EF-SS	EXHAUST FAN START/STOP COMMAND		ON/OFF	BO		

NOTES:

1. THE CONTRACTOR MUST COMPLETE THE POINTS SCHEDULE AS INDICATED IN THE SPECIFICATION AND IN ACCORDANCE WITH THIS DRAWING.

1 / M700 EXHAUST FAN CONTROLS

SCALE: NTS

The Johnson - M^Adams FIRM P.A.
ARCHITECT/ENGINEERS • PLANNING • SURVEYING • MANAGEMENT
P.O. BOX 510, GREENWOOD, MISSISSIPPI - (662) 455-4543

NO.	DATE	BY	DESCRIPTION

REVISIONS

A-E FIRM	USDA
PROJECT MANAGER RPP	EPM K. MAGEE
DESIGNER SME	PPM
CHECKED BY DRL	SAFETY & HEALTH
JOB # 3625	REAL PROPERTY

USDA Agricultural Research Service

USDA AGRICULTURAL RESEARCH SERVICE
JAMIE WHITTEN DELTA STATES RESEARCH CENTER
DESIGN TO REPLACE BUILDING 7 GREENHOUSE 3
STONEVILLE, MISSISSIPPI

MECHANICAL CONTROLS
BID OPTION #1

PROJECT NO.	AGRICULTURAL RESEARCH SERVICE	SHEET
DATE 2/24/2026	SOUTHEAST AREA STONEVILLE, MS	M700 28 OF 42

L:\greenwood\2025 Jobs\3625 USDA B7 GH3 + Head House Stoneville\07 Working Folder\Mech\M700.dwg
Feb 24, 2026 - 2:10pm

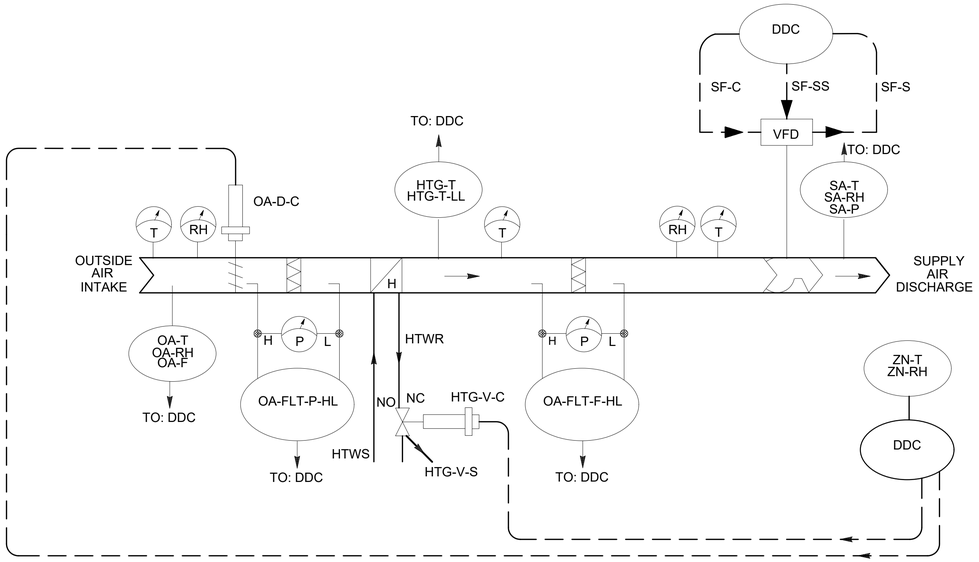

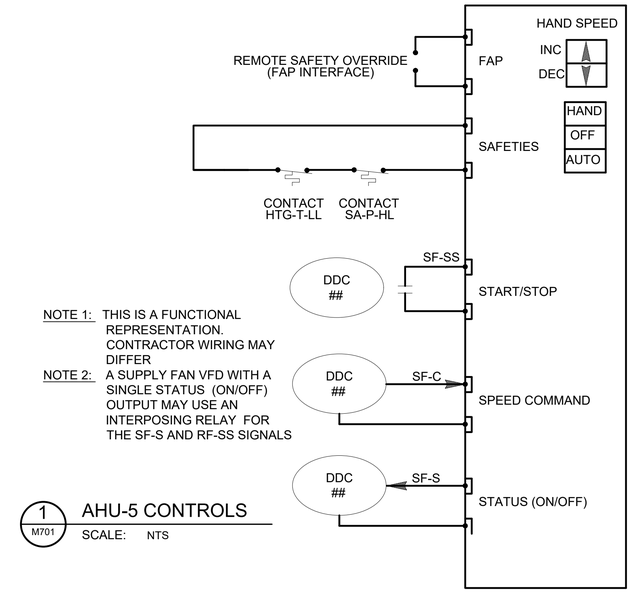

NOTE 1: THIS IS A FUNCTIONAL REPRESENTATION. CONTRACTOR WIRING MAY DIFFER

NOTE 2: A SUPPLY FAN VFD WITH A SINGLE STATUS (ON/OFF) OUTPUT MAY USE AN INTERPOSING RELAY FOR THE SF-S AND RF-SS SIGNALS

1 M701 AHU-5 CONTROLS

SCALE: NTS

						ALARMING	
FUNCTION	POINT NAME	DESCRIPTION	SETTING (WITH UNITS)	RANGE (WITH UNITS)	IO TYPE	ALARM CONDITION (SEE NOTES)	ALARM PRIORITY
PROOFS & SAFETIES	SF-S	SUPPLY FAN STATUS		ON/OFF	BI	ALM	INFO
	HTG-V-S	HEATING VALVE POSITION STATUS		0-100% OPEN	AI		INFO
	OA-RH	OUTDOOR AIR RELATIVE HUMIDITY		ALM/NORMAL	BI	ALM	CRITICAL
	SA-DP	SUPPLY AIR DEW POINT TEMPERATURE		ALM/NORMAL	BI	ALM	INFO
	OA-F	OUTSIDE AIR FLOW MEASURING STATION		ALM/NORMAL	BI		INFO
	OA-FLT-P-HL	PREFILTER PRESSURE HIGH LIMIT		ALM/NORMAL	BI		INFO
	OA-FLT-F-HL	FINAL FILTER PRESSURE HIGH LIMIT		ALM/NORMAL	BI		INFO
	ZN-T-HL	ZONE TEMPERATURE HIGH LIMIT		ALM/NORMAL	BI		CRITICAL
	ZN-RH-HL	ZONE RELATIVE HUMIDITY HIGH LIMIT		ALM/NORMAL	BI		CRITICAL
	ZN-T-LL	ZONE TEMPERATURE LOW LIMIT		ALM/NORMAL	BI		CRITICAL
	ZN-RH-LL	ZONE RELATIVE HUMIDITY LOW LIMIT		ALM/NORMAL	BI		CRITICAL
	SA-P-HL	SUPPLY AIR STATIC PRESSURE HIGH LIMIT		ALM/NORMAL	BI		CRITICAL
START/STOP	SF-SS	SUPPLY FAN START/STOP		ON/OFF	BI		
FAN CONTROL	SF-C	SUPPLY FAN COMMAND	SCHEDULED	ENABLE/DISABLE	BO		
	SA-P	SUPPLY AIR STATIC PRESSURE	TBD	0-5 IN. WC.	AI		
TEMPERATURE CONTROL	SA-T/RH	SUPPLY AIR DISCHARGE TEMPERATURE / HUMIDITY	60°F-110°F 15-60% RH	45-95°F/0-100% RH	AI		INFO
	OA-T/RH	INLET TEMPERATURE / HUMIDITY		0-130°F/0-100% RH	AI		INFO
	HTG-T	DISCHARGE TEMPERATURE	100°F	0-130°F	AI		INFO
	HTG-V-C	HEATING VALVE COMMAND		0-100% OPEN	AO		
	ZN-T-SP	ZONE TEMPERATURE SETPOINT	60°F	55-95 °F	AI		INFO
	ZN-RH-SP	ZONE RELATIVE HUMIDITY SETPOINT	35% RH	20-45% RH	AI		INFO
OUTSIDE AIR DAMPER	OA-D-C	OUTSIDE AIR DAMPER COMMAND			0-100%		

NOTES:

1. THE CONTRACTOR MUST COMPLETE THE POINTS SCHEDULE AS INDICATED IN THE SPECIFICATION AND IN ACCORDANCE WITH THIS DRAWING.
2. UNIT MANUFACTURERS PROOFS AND SAFETIES: THE CONTRACTOR MUST SHOW EACH PROOF AND SAFETY AS A SEPARATE ROW.
3. UNIT STATUS: SERVES AS A MONITORED POINT AT THE M&C SOFTWARE (FRONT-END) AND AS A HEATING/COOLING REQUEST TO THE BOILER AND/OR CHILLER SERVING THIS SYSTEM.
4. THE UNIT CONTROLS MUST INITIATE ALARM UPON DETECTION OF COOLING COIL LEAVING AIR TEMPERATURE BEING EQUAL TO OR GREATER THAN 5 DEG ABOVE DESIGN DEWPOINT TEMPERATURE.
5. TEMPERATURE SENSORS MUST BE ACCURATE TO 1%. HUMIDITY SENOSR MUST BE ACCURATE TO WITHIN 2.5%.
6. "TBD" = TO BE DETERMINED DURING TAB

SEQUENCE OF OPERATION

AHU-5:

RUN CONDITIONS - SCHEDULED:

THE UNIT MUST RUN ACCORDING TO A USER DEFINABLE TIME SCHEDULE IN THE FOLLOWING MODES:

- OCCUPIED MODE: THE UNIT MUST MAINTAIN
- A 60°F (ADJ.) HEATING SETPOINT.

ALARMS MUST BE PROVIDED AS FOLLOWS:

- LOW ZONE TEMP: IF THE ZONE TEMPERATURE IS LESS THAN THE HEATING SETPOINT BY -6 DEGF (ADJ.).

SUPPLY FAN:

IN THE OCCUPIED MODE, THE SUPPLY FAN MUST OPERATE CONTINUOUSLY. VFD MUST MODULATE FAN TO MAINTAIN STATIC PRESSURE SETPOINT SET BY TAB PERSONNEL. IF THE SUPPLY FAN FAILS TO PROVE STATUS FOR 30 SECONDS (ADJ.), THE FAN MUST BE DISABLED AND AN ALARM MUST BE ANNUNCIATED AT THE BAS. A MANUAL SOFTWARE RESET MUST BE REQUIRED TO RESTART THE FAN. A HARDWIRED, HIGH STATIC PRESSURE CUT-OFF SWITCH MUST BE ELECTRICALLY INTERLOCKED WITH THE SUPPLY FAN VARIABLE SPEED DRIVE. IF THE HIGH STATIC PRESSURE CUT-OFF SWITCH IS TRIPPED, THE FAN MUST BE DISABLED, THE OUTSIDE AIR DAMPER MUST CLOSE, ALL HEATING MUST BE DISABLED, AND AN ALARM MUST BE ANNUNCIATED AT THE A MANUAL RESET OF THE HIGH STATIC PRESSURE CUT-OFF SWITCH MUST BE REQUIRED TO RESTART THE FANS.

ZONE SETPOINT ADJUST:

THE OCCUPANT MUST BE ABLE TO ADJUST THE ZONE TEMPERATURE HEATING SETPOINTS AT THE ZONE SENSOR.

OCCUPIED PERIODS

THE SUPPLY FAN MUST RUN CONTINUOUSLY. OUTDOOR AIR DAMPER MUST MODULATE TO THE OPEN POSITION DETERMINED BY THE TAB PERSONNEL. WHEN STARTING UNIT IN SUB-FREEZING WEATHER, THE HEATING WATER VALVE WILL BE COMMANDED OPEN FOR 1 MINUTE BEFORE THE UNIT BEGINS THE STARTUP SEQUENCE.

DISCHARGE AIR TEMPERATURE:

THE CONTROLLER MUST MONITOR THE DISCHARGE AIR TEMPERATURE.

ALARMS MUST BE PROVIDED AS FOLLOWS:

- HIGH DISCHARGE AIR TEMP: IF THE DISCHARGE AIR TEMPERATURE IS GREATER THAN 120°F (ADJ.).

FREEZE PROTECTION:

A HARDWIRED, LOW LIMIT TEMPERATURE SWITCH MUST BE ELECTRICALLY INTERLOCKED WITH THE VARIABLE SPEED DRIVE. IF THE LOW LIMIT TEMPERATURE SWITCH IS TRIPPED 38.0 DEG. F (ADJ.), THE FAN MUST BE COMMANDED OFF. ALL VALVES MUST BE COMMANDED OPEN TO 100% (ADJUST PER CLIMATE). AN ALARM MUST ANNUNCIATE AT THE BAS AND MANUAL RESET OF THE LOW LIMIT TEMPERATURE SWITCH MUST BE REQUIRED TO RESTART THE FAN.

FILTER STATUS:

A DIFFERENTIAL PRESSURE SWITCH MUST MONITOR THE DIFFERENTIAL PRESSURE ACROSS THE FILTER(S) WHEN THE FAN IS RUNNING. IF THE SWITCH CLOSES DURING NORMAL OPERATION A DIRTY FILTER ALARM MUST ANNUNCIATE AT THE BAS. CONDENSATE OVERFLOW MONITORING: IF THE CONDENSATE LEVEL REACHES THE TRIP POINT, A CONDENSATE OVERFLOW DIAGNOSTIC MUST ANNUNCIATE AT THE BAS. TO PREVENT THE CONDENSATE DRAIN PAN FROM OVERFLOWING AND CAUSING WATER DAMAGE TO THE BUILDING THE FAN MUST BE DISABLED AND THE CHILLED WATER VALVE MUST CLOSE.

NO.	DATE	BY	DESCRIPTION

REVISIONS

The Johnson-M'Adams, PLLC P.A.
ARCHITECT/ENGINEERS • PLANNING • SURVEYING • MANAGEMENT
P.O. BOX 510, GREENWOOD, MISSISSIPPI - (662) 455-4543

USDA Agricultural Research Service

USDA AGRICULTURAL RESEARCH SERVICE
JAMIE WHITTEN DELTA STATES RESEARCH CENTER
DESIGN TO REPLACE BUILDING 7 GREENHOUSE 3
STONEVILLE, MISSISSIPPI

MECHANICAL CONTROLS
BID OPTION #1

A-E FIRM	USDA
PROJECT MANAGER RPP	EPM K. MAGEE
DESIGNER SME	PPM
CHECKED BY DRL	SAFETY & HEALTH
JOB # 3625	REAL PROPERTY

PROJECT NO.	AGRICULTURAL RESEARCH SERVICE SOUTHEAST AREA STONEVILLE, MS	SHEET M701
DATE 2/24/2026		29 OF 42

J:\greenwood\2025 Jobs\3625 USDA B7 GH3 + Head House Stoneville\07 Working Folder\Mech\M701.dwg
Feb 24, 2026 - 2:10pm

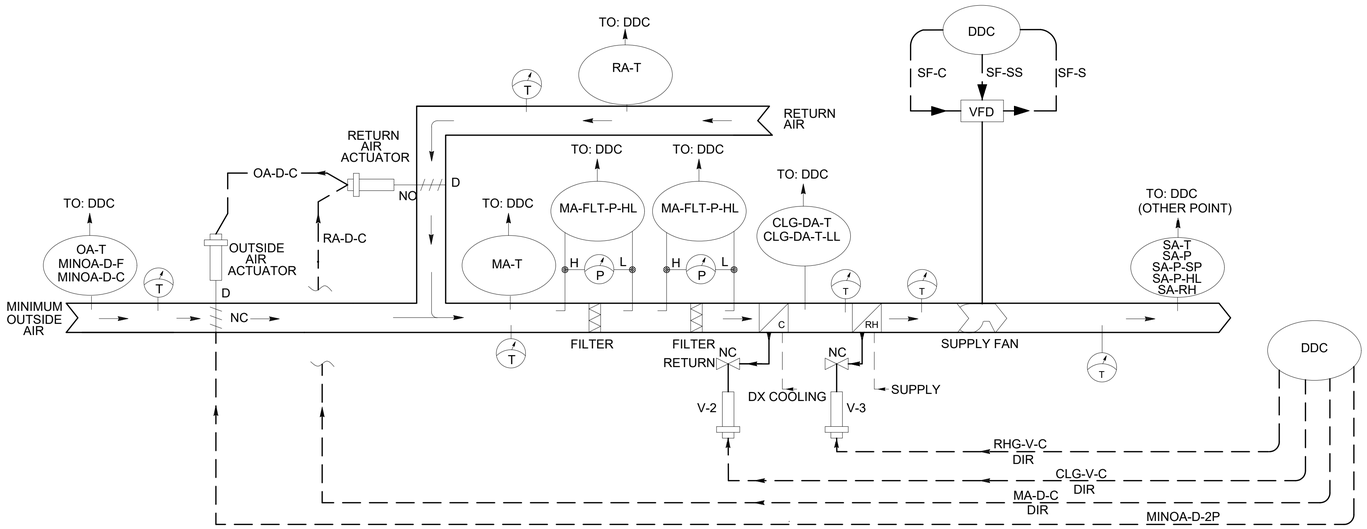

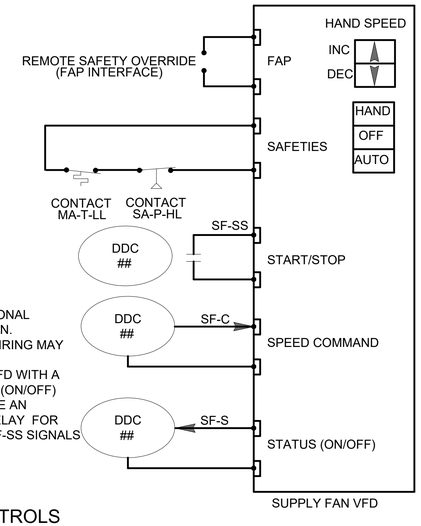

NOTE 1: THIS IS A FUNCTIONAL REPRESENTATION. CONTRACTOR WIRING MAY DIFFER

NOTE 2: A SUPPLY FAN VFD WITH A SINGLE STATUS (ON/OFF) OUTPUT MAY USE AN INTERPOSING RELAY FOR THE SF-S AND RF-SS SIGNALS

1 M702 AHU-4 CONTROLS

SCALE: NTS

FUNCTION	POINT NAME	DESCRIPTION	SETTING (WITH UNITS)	RANGE (WITH UNITS)	IO TYPE	ALARMING: ALARM CONDITION (SEE NOTES)	ALARMING: ALARM PRIORITY
PROOFS & SAFETIES	SF-S	SUPPLY FAN STATUS		ON/OFF	BI	SUPPLY FAN PROOF FAILED	INFO
	CLG-DA-T-LL	COOLING COIL DISCHARGE AIR TEMP LOW LIMIT (FREEZESTAT)	39°F	ALM/NORMAL	BI	ALM	CRITICAL
	SA-P-HL	SUPPLY AIR PRESSURE HIGH LIMIT	3" W.C.	ALM/NORMAL	BI	ALM	CRITICAL
START/STOP	SYS-OCC-C	OCCUPANCY COMMAND		OCCUPIED(1)/UNOCCUPIED(2)	NET-IN		
	SYS-OCC	SYSTEM OCCUPANCY (ACTUAL)		OCCUPIED(1)/UNOCCUPIED(2)	NET-OUT		
	SF-SS	SUPPLY FAN START/STOP		ON/OFF	BO		
	BLDG-T	BUILDING TEMPERATURE (NIGHT STAT)		0 - 130°F	AI, NET-IN	BLDG-T LESS THAN BLDG-T-LL	CRITICAL
	BLDG-T-LL	BUILDING TEMPERATURE LOW LIMIT	55°F				
SUPPLY FAN SPEED CONTROL	SF-C	SUPPLY FAN COMMAND		0-100%	AO		
	SA-P	SUPPLY AIR PRESSURE		0 - 5" W.C.	AI, NET-OUT	SYSTEM HAS BEEN IN OCCUPIED MODE FOR MORE THAN 5 MINUTES AND SA-P IS MORE THAN 20% ABOVE OR BELOW SA-P-SP	CRITICAL
	SA-P-SP	SUPPLY AIR PRESSURE SETPOINT	SEE AHU SCHEDULE				
	SUPPLY FAN CONTROL LOOP CONFIGURATION SETTINGS	PROPORTIONAL CONSTANT	TBD				
		INTEGRAL CONSTANT	TBD				
		BIAS	TBD				
		MAXIMUM OUTPUT	TBD				
		MINIMUM OUTPUT	TBD				
OUTDOOR AIR	OA-D-C	OUTSIDE AIR DAMPER COMMAND	0-100%				
	RA-D-C	RETURN AIR DAMPER COMMAND	0-100%				
	OUTSIDE AIR DAMPER CONTROL LOOP SETTINGS	PROPORTIONAL CONSTANT	TBD				
		INTEGRAL CONSTANT	TBD				
		BIAS	TBD				
SUPPLY AIR TEMPERATURE		MAXIMUM OUTPUT	TBD				
		MINIMUM OUTPUT	TBD				
	SA-T	SUPPLY AIR TEMPERATURE		0 - 130°F	AI	SYSTEM HAS BEEN IN OCCUPIED MODE FOR MORE THAN 5 MINUTES AND SA-T MORE THAN 10 DEG F ABOVE OR BELOW SETPOINT	INFO
	SA-RH	SUPPLY AIR RELATIVE HUMIDITY		0-100% RH	AO		
	CLG-V-C	COOLING VALVE COMMAND		0-100% OPEN	AO		
	RHG-V-C	REHEAT VALVE COMMAND		0-100% OPEN	AO		
	CLG-DA-T	COOLING COIL DISCHARGE AIR TEMPERATURE	AS SCHEDULED (ADJ.)	0 - 130°F	AI	ALM	CRITICAL
	SA-T-SP	SUPPLY AIR TEMPERATURE SETPOINT	AS SCHEDULED (ADJ.)	0 - 130°F	AI		
	COOLING VALVE CONTROL LOOP CONFIGURATION SETTINGS	THROTTLING RANGEPROPORTIONAL GAIN	TBD				
		INTEGRAL CONSTANT	TBD				
		BIAS	TBD				
		MAXIMUM OUTPUT MINIMUM OUTPUT	TBD				
OTHER POINTS	RA-T	RETURN AIR TEMPERATURE		0 - 130°F	AI		
	OA-T	OUTDOOR AIR TEMPERATURE		0 - 130°F	AI		
	MA-T	MIXED AIR TEMPERATURE		0 - 130°F	AI		
	MA-PFLT-P-HL	PRE-FILTER PRESSURE HIGH LIMIT SWITCH	1" W.C.	ALM/NORMAL	BI	ALM	CRITICAL
	MA-FLT-P-HL	MIXED AIR FILTER PRESSURE HIGH LIMIT SWITCH	1" W.C.	ALM/NORMAL	BI	ALM	CRITICAL

NOTES:

1. THE CONTRACTOR MUST COMPLETE THE POINTS SCHEDULE AS INDICATED IN THE SPECIFICATION AND IN ACCORDANCE WITH THIS DRAWING.
2. UNIT MANUFACTURERS PROOFS AND SAFETIES: THE CONTRACTOR MUST SHOW EACH PROOF AND SAFETY AS A SEPARATE ROW.
3. UNIT STATUS: SERVES AS A MONITORED POINT AT THE M&C SOFTWARE (FRONT-END) AND AS A HEATING REQUEST TO THE BOILER SERVING THIS SYSTEM.
4. "TBD" = TO BE DETERMINED DURING TAB

SEQUENCE OF OPERATION

AHU-4:

GENERAL OPERATING MODES: ALL NORMAL MODES ARE COMMANDED BY THE DDC SYSTEM AND THE FIRE ALARM SHUTDOWN MODE WILL BE COMMANDED BY A SIGNAL FROM THE FIRE ALARM SYSTEM. THE DDC SYSTEM WILL HAVE OPTIMUM START/STOP SCHEDULES, NIGHTTIME HIGH AND LOW SETPOINTS, OPERATOR ADJUSTABLE OVERRIDE TIMES, AND DEMAND LIMIT PARAMETERS.

1. WARMUP/COOLDOWN MODE: WHEN SCHEDULED BY THE DDC, THE SYSTEM OPERATION WILL BE ENABLED FOR COOLING AND HEATING ONLY. AFTER THE DIFFERENTIAL PROVES FAN OPERATION, ENABLE THE TEMPERATURE CONTROL. THE OUTDOOR AIR DAMPERS WILL REMAIN CLOSED DURING THIS OPERATION.
2. OCCUPIED MODE: WHEN SCHEDULED BY THE DDC, THE SYSTEM ENTERS THE OCCUPIED MODE. THE OPERATION MODE IS IDENTICAL TO THE WARM/COOLDOWN MODE EXCEPT THAT THE MINIMUM OUTSIDE AIR DAMPER IS OPENED.
3. UNOCCUPIED MODE: WHEN SCHEDULED BY THE DDC, THE SYSTEM OPERATION WILL BE DISABLED. THE FAN WILL STOP, OUTDOOR DAMPER CLOSES, AND ALL CONTROL DEACTIVATED. NIGHT TIME SETBACK TEMPERATURES MUST BE 10 DEGF (ADJ.) BELOW INDOOR DESIGN HEATING CONDITIONS BUT NOT LOWER THAN 55 DEGF AND 5 DEGF (ADJ.) ABOVE INDOOR COOLING DESIGN CONDITIONS BUT NOT HIGHER THAN 85 DEGF. (UNITS MUST BE PROGRAMMED TO RUN IN THE OCCUPIED MODE AT ALL TIMES). UNOCCUPIED MODE MUST ONLY BE PROVIDED AS A SYSTEM FEATURE FOR THE USER.
4. FIRE ALARM SHUTDOWN MODE: ALL FANS WILL STOP AND THROUGH AN ADJUSTABLE DELAY ALL SYSTEM DAMPERS WILL CLOSE.

AHU START CONTROL: WHEN THE HAND OFF AUTO (H-O-A) SWITCH INITIATES A START SIGNAL IN THE HAND POSITION, OR THE DDC INITIATES A START SIGNAL WITH THE H-O-A IN THE AUTO POSITION, THE SYSTEM WILL ENTER THE WARM-UP/COOLDOWN MODE. THE SUPPLY FAN WILL START AND RUN CONTINUOUSLY. THE VOLUME CONTROL WILL BE AS DESCRIBED IN THE VARIABLE AIR VOLUME CONTROL SEQUENCE THROUGH A 15 MINUTE TIME DELAY (0 TO 60 MINUTES ADJ.). THE SYSTEM WILL ENTER THE OCCUPIED MODE UPON A SIGNAL FROM THE DDC SYSTEM. THE OUTDOOR AIR DAMPER WILL OPEN AND INTERLOCKED EXHAUST FANS WILL START. THE OCCUPIED MODE WILL BE INITIATED THOUGH A PREPROGRAMMED SCHEDULE IN THE DDC SYSTEM OR BY A MANUAL COMMAND THROUGH THE DDC SYSTEM.

VARIABLE VOLUME CONTROL: THE STATIC PRESSURE SENSOR/TRANSMITTER IN THE MAIN SUPPLY DUCT WILL BE LOCATED APPROXIMATELY 3/4 OF THE DUCTWORK DISTANCE DOWNSTREAM OF THE AHU. WITH THE SUPPLY AIR OPERATING, THE DDC SYSTEM WILL MODULATE THE SUPPLY PLUG FAN ACTUATOR TO MAINTAIN THE DUCT SYSTEM PRESSURE. SETPOINT MUST BE REDUCED TO 25% (ADJ.) DURING OCCUPIED MODE.

OUTDOOR AIR DAMPER CONTROL: WHEN THE SYSTEM IS IN THE OCCUPIED MODE, THE OUTDOOR AIR DAMPER MUST REMAIN OPEN. AS SUPPLY AND RETURN AIR QUANTITIES DECREASE UPON VAV TURNDOWN THE RETURN AIR DAMPER WILL MODULATE CLOSED BASED ON A PRESSURE SENSOR IN THE MIXED AIR PLENUM TO PROVIDE A CONSTANT VOLUME OF OUTDOOR AIR REGARDLESS OF THE SUPPLY AIR QUANTITY SETPOINT.

COOLING COIL CONTROL: WHEN THE FAN STATUS IS PROVEN, THE TEMPERATURE CONTROL IS ACTIVATED,THE DISCHARGE AIR SENSOR WILL MODULATE THE DX COIL VALVE TO MAINTAIN A DISCHARGE AIR DEWPOINT TEMPERATURE AS SCHEDULED (ADJ.).

REHEAT COIL CONTROL: WHEN THE FAN STATUS IS PROVEN, THE TEMPERATURE CONTROL IS ACTIVATED, THE DISCHARGE AIR SENSOR WILL MODULATE THE REHEAT HEATING WATER COIL VALVE TO MAINTAIN A DISCHARGE AIR SETPOINT TEMPERATURE OF 60 DEG. F (ADJ).

AHU SHUTDOWN CONTROL: WHEN THE H-O-A SWITCH INITIATES A STOP SIGNAL THROUGH THE OFF POSITION OR THE DDC INITIATES A STOP SIGNAL WITH THE H-O-A IN THE AUTO POSITION OF THE DUCT WORK STATIC PRESSURE EXCEEDS THE SETPOINT OF THE MANUAL RESET HIGH STATIC SWITCH. THE SUPPLY FAN WILL STOP THROUGH AN ADJUSTABLE TIME DELAY SET FOR 15 SECONDS (0 TO 60 SECONDS ADJ.) THE OUTDOOR AIR DAMPER WILL CLOSE. THE SAME SEQUENCE FOR FAN SHUTDOWN CONTROL WILL ALSO OCCUR ON A SIGNAL FROM THE FIRE ALARM SYSTEM.

A. A MANUALLY RESET DIFFERENTIAL PRESSURE SWITCH ON THE AHU DISCHARGE AIR PLENUM WILL BE WIRED THROUGH THE HAND AND AUTO POSITION OF THE H-O-A SWITCH TO STOP THE AHU FAN IF THE DUCT PRESSURE EXCEEDS ITS SETPOINT.

LOW TEMP CONTROL: A TEMPERATURE SENSOR IN THE MIXED AIR DUCTWORK WILL DIRECT THE LOW TEMPERATURE SHUTDOWN. ACCORDING TO THE FOLLOWING THREE ADJUSTABLE SETTINGS.

A. SETTING #1 (40 DEG.F.) DDC PRINTS A LEVEL ONE DIAGNOSTIC ALARM.
B. SETTING #2 (38 DEG.F.) DDC PRINTS A LEVEL TWO DIAGNOSTIC ALARM, STOPS SUPPLY FAN, CLOSES OUTDOOR AIR DAMPER. AUTOMATIC RESET AFTER A 5 MINUTE (0 TO 60 MINUTE ADJ.) SHUTDOWN.
C. SETTING #3 (35 DEG.F.) DDC PRINTS A LEVEL THREE DIAGNOSTIC ALARM, STOPS SUPPLY FAN, CLOSES OUTDOOR AIR DAMPER. MANUAL RESET ON LOW LIMIT STAT

FILTER STATUS: A DIFFERENTIAL PRESSURE SENSOR ACROSS THE AHU FILTER SECTION WILL INDICATE STATUS FROM CLEAN MEDIA AT STARTUP TO SOILED MEDIA CONDITION.

A. THE DDC WILL INDICATE PERCENTAGE LOADED. INITIAL PRESSURE DROP IN ACCORDANCE WITH FILTER MEDIA MANUFACTURER'S RECOMMENDATION, SOILED FILTER VALUE OF 10 INCHES WATER COLUMN.
B. THE DDC WILL SET A MAINTENANCE ALARM AT A PRESSURE DROP OF 0 INCHES (0-2" ADJ.).

ALARMS: PRINT DIAGNOSTIC ALARM TO DDC IF SEQUENCE OF OPERATION CANNOT BE ACCOMPLISHED DURING NORMAL SCHEDULED HOURS OF OPERATION. OPERATORS WILL BE ABLE TO VIEW ALL POINTS OF CONTROL PRIOR TO FAILURE.

THE Johnson • M^Adams PWM P.A.
ARCHITECTS•ENGINEERS•PLANNERS•SURVEYING•MANAGEMENT
P.O. BOX 913, GREENWOOD, MISSISSIPPI - (662) 455-6943

NO.	DATE	BY	DESCRIPTION

REVISIONS

USDA Agricultural Research Service

USDA AGRICULTURAL RESEARCH SERVICE
JAMIE WHITTEN DELTA STATES RESEARCH CENTER
DESIGN TO REPLACE BUILDING 7 GREENHOUSE 3
STONEVILLE, MISSISSIPPI

MECHANICAL CONTROLS
BID OPTION #1

A-E FIRM	USDA
PROJECT MANAGER: RPP	EPM: K. MAGEE
DESIGNER: SME	PPM
CHECKED BY: DRL	SAFETY & HEALTH
JOB #: 3625	REAL PROPERTY

SAMUEL M. ENGLE LICENSED PROFESSIONAL ENGINEER 21157 02/24/26 STATE OF MISSISSIPPI

PROJECT NO.	AGRICULTURAL RESEARCH SERVICE	SHEET
DATE 2/24/2026	SOUTHEAST AREA STONEVILLE, MS	M702 30 OF 42

J:\greenwood\2025 Jobs\3625 USDA B7 GH3 + Head House Stoneville\07 Working Folder\Mech\M702.dwg
Feb 24, 2026 - 2:10pm

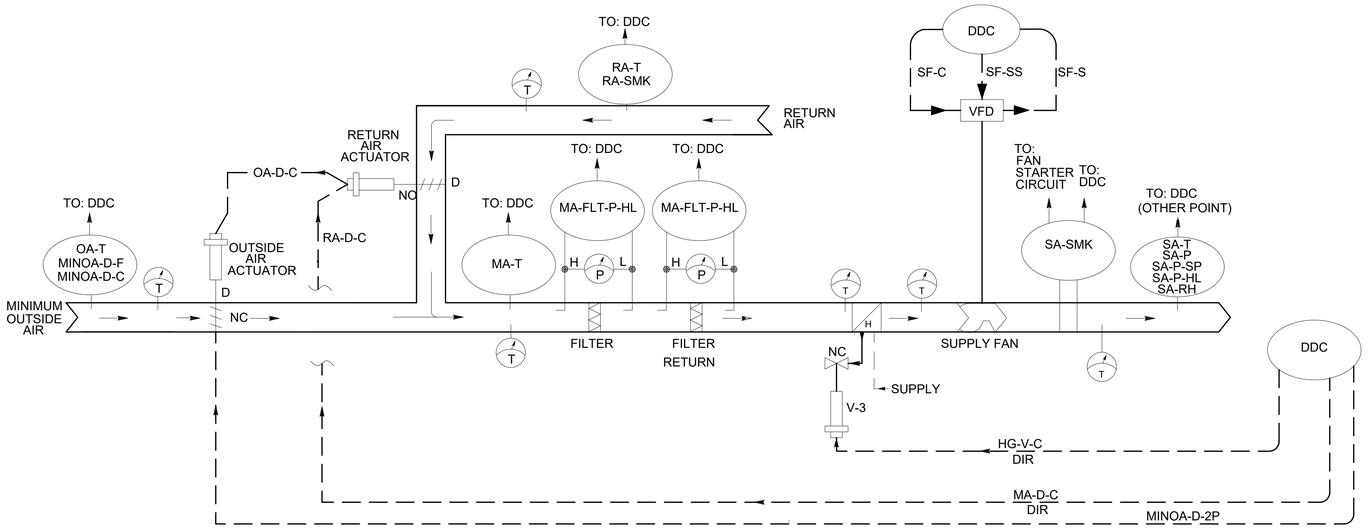

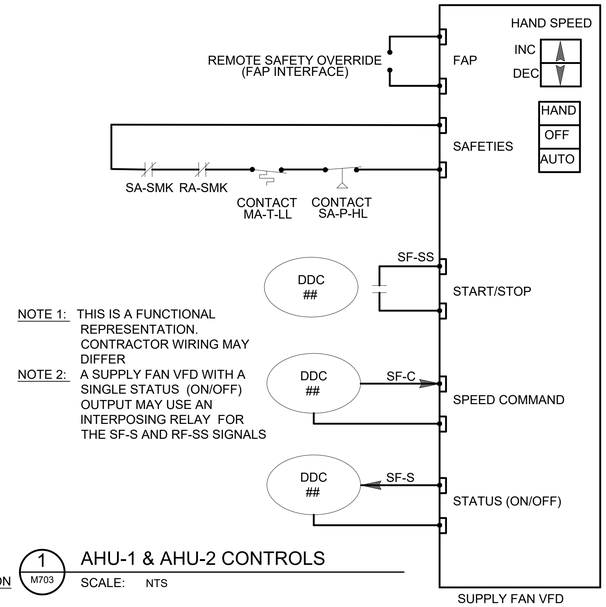

NOTE 1: THIS IS A FUNCTIONAL REPRESENTATION. CONTRACTOR WIRING MAY DIFFER

NOTE 2: A SUPPLY FAN VFD WITH A SINGLE STATUS (ON/OFF) OUTPUT MAY USE AN INTERPOSING RELAY FOR THE SF-S AND RF-SS SIGNALS

1 M703 AHU-1 & AHU-2 CONTROLS

SCALE: NTS

FUNCTION	POINT NAME	DESCRIPTION	SETTING (WITH UNITS)	RANGE (WITH UNITS)	IO TYPE	ALARMING: ALARM CONDITION (SEE NOTES)	ALARMING: ALARM PRIORITY
PROOFS & SAFETIES	SF-S	SUPPLY FAN STATUS		ON/OFF	BI	SUPPLY FAN PROOF FAILED	INFO
	SA-SMK	SUPPLY AIR SMOKE		ALM/NORMAL	BI	ALM	CRITICAL
	RA-SMK	RETURN AIR SMOKE		ALM/NORMAL	BI	ALM	CRITICAL
	SA-P-HL	SUPPLY AIR PRESSURE HIGH LIMIT	3" W.C.	ALM/NORMAL	BI	ALM	CRITICAL
START/STOP	SYS-OCC-C	OCCUPANCY COMMAND		OCCUPIED(1)/UNOCCUPIED(2)	NET-IN		
	SYS-OCC	SYSTEM OCCUPANCY (ACTUAL)		OCCUPIED(1)/UNOCCUPIED(2)	NET-OUT		
	SF-SS	SUPPLY FAN START/STOP		ON/OFF	BO		
	BLDG-T	BUILDING TEMPERATURE (NIGHT STAT)		0 - 130°F	AI, NET-IN	BLDG-T LESS THAN BLDG-T-LL	CRITICAL
	BLDG-T-LL	BUILDING TEMPERATURE LOW LIMIT	55°F				
SUPPLY FAN SPEED CONTROL	SF-C	SUPPLY FAN COMMAND		0-100%	AO		
	SA-P	SUPPLY AIR PRESSURE		0 - 5" W.C.	AI, NET-OUT	SYSTEM HAS BEEN IN OCCUPIED MODE FOR MORE THAN 5 MINUTES AND SA-P IS MORE THAN 20% ABOVE	CRITICAL
	SA-P-SP	SUPPLY AIR PRESSURE SETPOINT	SEE AHU SCHEDULE			OR BELOW SA-P-SP	
	SUPPLY FAN CONTROL LOOP CONFIGURATION SETTINGS	PROPORTIONAL CONSTANT	TBD				
		INTEGRAL CONSTANT	TBD				
		BIAS	TBD				
		MAXIMUM OUTPUT	TBD				
		MINIMUM OUTPUT	TBD				
OUTDOOR AIR	OA-D-C	OUTSIDE AIR DAMPER COMMAND	0-100%				
	RA-D-C	RETURN AIR DAMPER COMMAND	0-100%				
	OUTSIDE AIR DAMPER CONTROL LOOP SETTINGS	PROPORTIONAL CONSTANT	TBD				
		INTEGRAL CONSTANT	TBD				
		BIAS	TBD				
SUPPLY AIR TEMPERATURE		MAXIMUM OUTPUT	TBD				
		MINIMUM OUTPUT	TBD				
	SA-T	SUPPLY AIR TEMPERATURE		0 - 130°F	AI	SYSTEM HAS BEEN IN OCCUPIED MODE FOR MORE THAN 5 MINUTES AND SA-T MORE THAN 10 DEG F	INFO
	SA-RH	SUPPLY AIR RELATIVE HUMIDITY		0-100% RH	AO	ABOVE OR BELOW SETPOINT	
	HG-V-C	HEATING VALVE COMMAND		0-100% OPEN	AO		
							CRITICAL
	SA-T-SP	SUPPLY AIR TEMPERATURE SETPOINT	AS SCHEDULED (ADJ.)	0 - 130°F	AI		
OTHER POINTS	RA-T	RETURN AIR TEMPERATURE		0 - 130°F	AI		
	OA-T	OUTDOOR AIR TEMPERATURE		0 - 130°F	AI		
	MA-T	MIXED AIR TEMPERATURE		0 - 130°F	AI		
	MA-PFLT-P-HL	PRE-FILTER PRESSURE HIGH LIMIT SWITCH	1" W.C.	ALM/NORMAL	BI	ALM	CRITICAL
	MA-FLT-P-HL	MIXED AIR FILTER PRESSURE HIGH LIMIT SWITCH	1" W.C.	ALM/NORMAL	BI	ALM	CRITICAL

NOTES:

1. THE CONTRACTOR MUST COMPLETE THE POINTS SCHEDULE AS INDICATED IN THE SPECIFICATION AND IN ACCORDANCE WITH THIS DRAWING.
2. UNIT MANUFACTURERS PROOFS AND SAFETIES: THE CONTRACTOR MUST SHOW EACH PROOF AND SAFETY AS A SEPARATE ROW.
3. UNIT STATUS: SERVES AS A MONITORED POINT AT THE M&C SOFTWARE (FRONT-END) AND AS A HEATING REQUEST TO THE BOILER SERVING THIS SYSTEM.
4. "TBD" = TO BE DETERMINED DURING TAB

SEQUENCE OF OPERATION
AHU-1 & AHU-2:

GENERAL OPERATING MODES: ALL NORMAL MODES ARE COMMANDED BY THE DDC SYSTEM AND THE FIRE ALARM SHUTDOWN MODE WILL BE COMMANDED BY A SIGNAL FROM THE FIRE ALARM SYSTEM. THE DDC SYSTEM WILL HAVE OPTIMUM START/STOP SCHEDULES, NIGHTTIME HIGH AND LOW SETPOINTS, OPERATOR ADJUSTABLE OVERRIDE TIMES, AND DEMAND LIMIT PARAMETERS.

1. WARMUPMODE: WHEN SCHEDULED BY THE DDC, THE SYSTEM OPERATION WILL BE ENABLED FOR HEATING ONLY. AFTER THE DIFFERENTIAL PROVES FAN OPERATION, ENABLE THE TEMPERATURE CONTROL. THE OUTDOOR AIR DAMPERS WILL REMAIN CLOSED DURING THIS OPERATION.
2. OCCUPIED MODE: WHEN SCHEDULED BY THE DDC, THE SYSTEM ENTERS THE OCCUPIED MODE. THE OPERATION MODE IS IDENTICAL TO THE WARMUP MODE EXCEPT THAT THE MINIMUM OUTSIDE AIR DAMPER IS OPENED.
3. UNOCCUPIED MODE: WHEN SCHEDULED BY THE DDC, THE SYSTEM OPERATION WILL BE DISABLED. THE FAN WILL STOP, OUTDOOR DAMPER CLOSES, AND ALL CONTROL DEACTIVATED. NIGHT TIME SETBACK TEMPERATURES MUST BE 10 DEGF (ADJ.) BELOW INDOOR DESIGN HEATING CONDITIONS BUT NOT LOWER THAN 55 DEGF. (UNITS MUST BE PROGRAMMED TO RUN IN THE OCCUPIED MODE AT ALL TIMES). UNOCCUPIED MODE MUST ONLY BE PROVIDED AS A SYSTEM FEATURE FOR THE USER.
4. FIRE ALARM SHUTDOWN MODE: ALL FANS WILL STOP AND THROUGH AN ADJUSTABLE DELAY ALL SYSTEM DAMPERS WILL CLOSE.

AHU START CONTROL: WHEN THE HAND OFF AUTO (H-O-A) SWITCH INITIATES A START SIGNAL IN THE HAND POSITION, OR THE DDC INITIATES A START SIGNAL WITH THE H-O-A IN THE AUTO POSITION, THE SYSTEM WILL ENTER THE WARM-UP MODE. THE SUPPLY FAN WILL START AND RUN CONTINUOUSLY. THE VOLUME CONTROL WILL BE AS DESCRIBED IN THE VARIABLE AIR VOLUME CONTROL SEQUENCE THROUGH A 15 MINUTE TIME DELAY (0 TO 60 MINUTES ADJ.). THE SYSTEM WILL ENTER THE OCCUPIED MODE UPON A SIGNAL FROM THE DDC SYSTEM. THE OUTDOOR AIR DAMPER WILL OPEN. THE OCCUPIED MODE WILL BE INITIATED THOUGH A PREPROGRAMMED SCHEDULE IN THE DDC SYSTEM OR BY A MANUAL COMMAND THROUGH THE DDC SYSTEM.

VARIABLE VOLUME CONTROL: THE STATIC PRESSURE SENSOR/TRANSMITTER IN THE MAIN SUPPLY DUCT WILL BE LOCATED APPROXIMATELY 3/4 OF THE DUCTWORK DISTANCE DOWNSTREAM OF THE AHU. WITH THE SUPPLY AIR OPERATING, THE DDC SYSTEM WILL MODULATE THE SUPPLY PLUG FAN ACTUATOR TO MAINTAIN THE DUCT SYSTEM PRESSURE. SETPOINT MUST BE REDUCED TO 25% (ADJ.) DURING OCCUPIED MODE.

OUTDOOR AIR DAMPER CONTROL: WHEN THE SYSTEM IS IN THE OCCUPIED MODE, THE OUTDOOR AIR DAMPER MUST REMAIN OPEN. AS SUPPLY AND RETURN AIR QUANTITIES DECREASE UPON VAV TURNDOWN THE RETURN AIR DAMPER WILL MODULATE CLOSED BASED ON A PRESSURE SENSOR IN THE MIXED AIR PLENUM TO PROVIDE A CONSTANT VOLUME OF OUTDOOR AIR REGARDLESS OF THE SUPPLY AIR QUANTITY SETPOINT.

HEATING COIL CONTROL: WHEN THE FAN STATUS IS PROVEN, THE TEMPERATURE CONTROL IS ACTIVATED, THE DISCHARGE AIR SENSOR WILL MODULATE THE REHEAT HEATING WATER COIL VALVE TO MAINTAIN A DISCHARGE AIR SETPOINT TEMPERATURE OF 60 DEG. F (ADJ).

AHU SHUTDOWN CONTROL: WHEN THE H-O-A SWITCH INITIATES A STOP SIGNAL THROUGH THE OFF POSITION OR THE DDC INITIATES A STOP SIGNAL WITH THE H-O-A IN THE AUTO POSITION OF THE DUCT WORK STATIC PRESSURE EXCEEDS THE SETPOINT OF THE MANUAL RESET HIGH STATIC SWITCH. THE SUPPLY FAN WILL STOP THROUGH AN ADJUSTABLE TIME DELAY SET FOR 15 SECONDS (0 TO 60 SECONDS ADJ.) THE OUTDOOR AIR DAMPER WILL CLOSE. THE SAME SEQUENCE FOR FAN SHUTDOWN CONTROL WILL ALSO OCCUR ON A SIGNAL FROM THE FIRE ALARM SYSTEM.

A. A MANUALLY RESET DIFFERENTIAL PRESSURE SWITCH ON THE AHU DISCHARGE AIR PLENUM WILL BE WIRED THROUGH THE HAND AND AUTO POSITION OF THE H-O-A SWITCH TO STOP THE AHU FAN IF THE DUCT PRESSURE EXCEEDS ITS SETPOINT.

LOW TEMP CONTROL: A TEMPERATURE SENSOR IN THE MIXED AIR DUCTWORK WILL DIRECT THE LOW TEMPERATURE SHUTDOWN. ACCORDING TO THE FOLLOWING THREE ADJUSTABLE SETTINGS.

A. SETTING #1 (40 DEG.F.) DDC PRINTS A LEVEL ONE DIAGNOSTIC ALARM.
B. SETTING #2 (38 DEG.F.) DDC PRINTS A LEVEL TWO DIAGNOSTIC ALARM, STOPS SUPPLY FAN, CLOSES OUTDOOR AIR DAMPER. AUTOMATIC RESET AFTER A 5 MINUTE (0 TO 60 MINUTE ADJ.) SHUTDOWN.
C. SETTING #3 (35 DEG.F.) DDC PRINTS A LEVEL THREE DIAGNOSTIC ALARM, STOPS SUPPLY FAN, CLOSES OUTDOOR AIR DAMPER. MANUAL RESET ON LOW LIMIT STAT

FILTER STATUS: A DIFFERENTIAL PRESSURE SENSOR ACROSS THE AHU FILTER SECTION WILL INDICATE STATUS FROM CLEAN MEDIA AT STARTUP TO SOILED MEDIA CONDITION.

A. THE DDC WILL INDICATE PERCENTAGE LOADED. INITIAL PRESSURE DROP IN ACCORDANCE WITH FILTER MEDIA MANUFACTURER'S RECOMMENDATION, SOILED FILTER VALUE OF 10 INCHES WATER COLUMN.
B. THE DDC WILL SET A MAINTENANCE ALARM AT A PRESSURE DROP OF 0 INCHES (0-2" ADJ.).

ALARMS: PRINT DIAGNOSTIC ALARM TO DDC IF SEQUENCE OF OPERATION CANNOT BE ACCOMPLISHED DURING NORMAL SCHEDULED HOURS OF OPERATION. OPERATORS WILL BE ABLE TO VIEW ALL POINTS OF CONTROL PRIOR TO FAILURE.

THE Johnson · M'Adams FIRM P.A.
ARCHITECT·ENGINEERS • PLANNING • SURVEYING • MANAGEMENT
P.O. BOX 510, GREENWOOD, MISSISSIPPI - (662) 455-9543

NO.	DATE	BY	DESCRIPTION

REVISIONS

SAMUEL M. ENGLISH LICENSED PROFESSIONAL ENGINEER 31151 02/24/26 STATE OF MISSISSIPPI

A-E FIRM	USDA
PROJECT MANAGER RPP	EPM K. MAGEE
DESIGNER SME	PPM
CHECKED BY DRL	SAFETY & HEALTH
JOB # 3625	REAL PROPERTY

USDA Agricultural Research Service

USDA AGRICULTURAL RESEARCH SERVICE
JAMIE WHITTEN DELTA STATES RESEARCH CENTER
DESIGN TO REPLACE BUILDING 7 GREENHOUSE 3
STONEVILLE, MISSISSIPPI

MECHANICAL CONTROLS
BID OPTION #1

PROJECT NO.	AGRICULTURAL RESEARCH SERVICE	SHEET
DATE 2/24/2026	SOUTHEAST AREA STONEVILLE, MS	M703

J:\greenwood\2025 Jobs\3625 USDA B7 GH3 + Head House Stoneville\07 Working Folder\Mech\M703.dwg
Feb 24, 2026 - 2:10pm

KEYED NOTES

1. PROVIDE TEMPERATURE AND PRESSURE GAUGES ON INLET AND OUTLET PIPING OF PUMP.
2. PROVIDE AIR HANDLER, PIPING, CONTROLS, DUCTWORK, INSULATION, AND ALL APPURTENANCES UNDER BID OPTION #1.

GENERAL NOTES

1. ENTIRE HYDRONIC HEATING SYSTEM MUST BE FILLED WITH 30% INHIBITED PROPYLENE GLYCOL SOLUTION. CONTRACTOR MUST BE RESPONSIBLE FOR FLUSHING, FILLING, TESTING, AND DOCUMENTING FINAL CONCENTRATION.

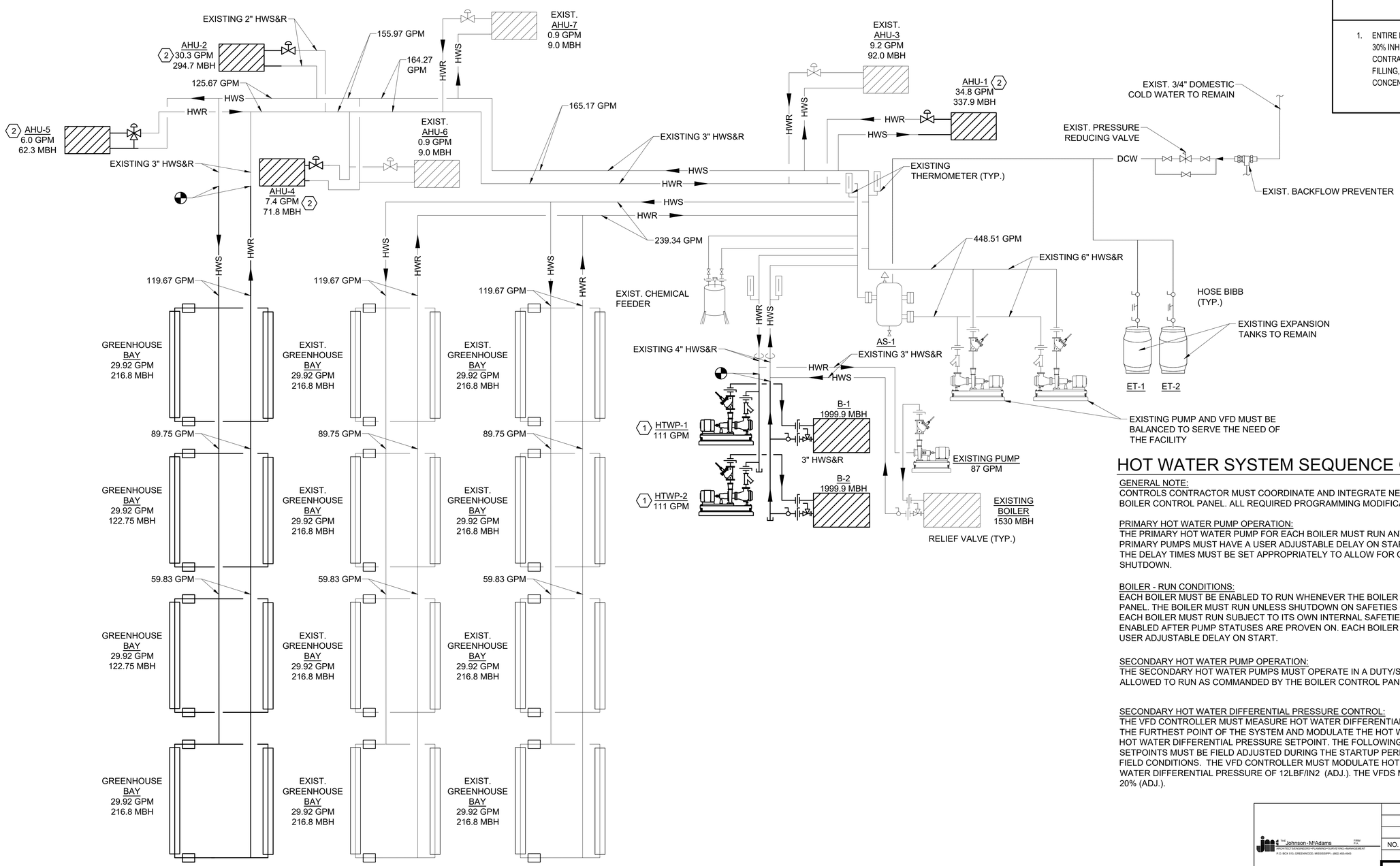

LEGEND:

POINT OF CONNECTION

HOT WATER SYSTEM SEQUENCE OF OPERATION

GENERAL NOTE:
CONTROLS CONTRACTOR MUST COORDINATE AND INTEGRATE NEW HEATING EQUIPMENT WITH THE EXISTING BOILER CONTROL PANEL. ALL REQUIRED PROGRAMMING MODIFICATIONS ARE PART OF THIS CONTRACT.

PRIMARY HOT WATER PUMP OPERATION:
THE PRIMARY HOT WATER PUMP FOR EACH BOILER MUST RUN ANYTIME THE BOILER IS CALLED TO RUN. THE PRIMARY PUMPS MUST HAVE A USER ADJUSTABLE DELAY ON START AND A USER ADJUSTABLE DELAY ON STOP. THE DELAY TIMES MUST BE SET APPROPRIATELY TO ALLOW FOR ORDERLY HOT WATER SYSTEM START-UP AND SHUTDOWN.

BOILER - RUN CONDITIONS:
EACH BOILER MUST BE ENABLED TO RUN WHENEVER THE BOILER IS COMMANDED ON BY THE BOILER CONTROL PANEL. THE BOILER MUST RUN UNLESS SHUTDOWN ON SAFETIES OR BY THE BOILER CONTROL PANEL. EACH BOILER MUST RUN SUBJECT TO ITS OWN INTERNAL SAFETIES AND CONTROLS. EACH BOILER MUST BE ENABLED AFTER PUMP STATUSES ARE PROVEN ON. EACH BOILER MUST THEREFORE HAVE A USER ADJUSTABLE DELAY ON START.

SECONDARY HOT WATER PUMP OPERATION:
THE SECONDARY HOT WATER PUMPS MUST OPERATE IN A DUTY/STANDY FASHION. ONLY ONE PUMP MUST BE ALLOWED TO RUN AS COMMANDED BY THE BOILER CONTROL PANEL.

SECONDARY HOT WATER DIFFERENTIAL PRESSURE CONTROL:
THE VFD CONTROLLER MUST MEASURE HOT WATER DIFFERENTIAL PRESSURE FROM APPROXIMATELY 2/3 DOWN OF THE FURTHEST POINT OF THE SYSTEM AND MODULATE THE HOT WATER PUMP VFDS IN SEQUENCE TO MAINTAIN ITS HOT WATER DIFFERENTIAL PRESSURE SETPOINT. THE FOLLOWING SETPOINTS ARE RECOMMENDED VALUES. ALL SETPOINTS MUST BE FIELD ADJUSTED DURING THE STARTUP PERIOD TO MEET THE REQUIREMENTS OF ACTUAL FIELD CONDITIONS. THE VFD CONTROLLER MUST MODULATE HOT WATER PUMP SPEEDS TO MAINTAIN A HOT WATER DIFFERENTIAL PRESSURE OF 12LBF/IN2 (ADJ.). THE VFDS MINIMUM SPEED MUST NOT DROP BELOW 20% (ADJ.).

1 M800 HOT WATER PIPING DIAGRAM
SCALE: 3/32"=1'-0"

16' 8' 0 16'
SCALE: 3/32" = 1'-0"

JAMES M. ENGLE REGISTERED PROFESSIONAL ENGINEER 2/24/26 STATE OF MISSISSIPPI

THE Johnson-M'Adams FIRM P.A.
ARCHITECT, ENGINEERS, PLANNERS & SURVEYORS • MANAGEMENT
P.O. BOX 513, GREENWOOD, MISSISSIPPI - (662) 455-4943

NO.	DATE	BY	DESCRIPTION

REVISIONS

A-E FIRM	USDA
PROJECT MANAGER RPP	EPM K. MAGEE
DESIGNER SME	PPM
CHECKED BY DRL	SAFETY & HEALTH
JOB # 3625	REAL PROPERTY

USDA Agricultural Research Service

USDA AGRICULTURAL RESEARCH SERVICE
JAMIE WHITTEN DELTA STATES RESEARCH CENTER
DESIGN TO REPLACE BUILDING 7 GREENHOUSE 3
STONEVILLE, MISSISSIPPI

HOT WATER PIPING DIAGRAM

PROJECT NO.	AGRICULTURAL RESEARCH SERVICE	SHEET
DATE 2/24/2026	SOUTHEAST AREA STONEVILLE, MS	M800
		32 OF 42

J:\greenwood\2025 Jobs\3625 USDA B7 GH3 + Head House Stoneville\07 Working Folder\Mech\M800.dwg
Feb 24, 2026 - 2:10pm

GENERAL PROJECT NOTES:

1. THE DRAWINGS INDICATE THE GENERAL EXTENT OF WORK. THE DRAWINGS ARE NOT INTENDED TO INDICATE OR DESCRIBE ALL WORK REQUIRED FOR THE FULL PERFORMANCE AND COMPLETION OF THE REQUIREMENTS OF THE CONTRACT.

2. THE CONTRACTOR IS RESPONSIBLE FOR THE COORDINATION OF ALL PARTS OF THE WORK SO THAT NO WORK SHALL BE LEFT IN AN UNFINISHED OR INCOMPLETE CONDITION. INSTALLATION OF ELECTRICAL WORK SHALL BE COORDINATED WITH OTHER TRADES BEFORE ANY INSTALLATION IS DONE. CONDUIT AND DEVICES SHOWN ON PLANS ARE SCHEMATIC.

3. ALL WORK SHALL CONFORM TO APPLICABLE INDUSTRY AND MANUFACTURER'S PUBLISHED STANDARDS FOR QUALITY OF MATERIALS AND WORKMANSHIP, AS WELL AS, ALL REQUIREMENTS IN THESE DRAWINGS AND SPECIFICATIONS. ANY CONFLICTING REQUIREMENTS OF THE SOURCES LISTED ABOVE SHALL BE BROUGHT TO THE CONTRACTING OFFICER'S ATTENTION PRIOR TO PROCEEDING WITH THE WORK.

4. THE CONTRACTOR SHALL PROTECT ALL EXISTING, IN-PLACE, AND NEW WORK.

5. ONCE ON SITE, THE CONTRACTOR SHALL VERIFY ALL DIMENSIONS AND SHALL VERIFY ALL NEW AND EXISTING CONDITIONS SHOWN ON THESE DRAWINGS. THE CONTRACTOR SHALL NOTIFY THE C.O. IN WRITING OF ANY DIFFERING CONDITIONS BEFORE COMMENCEMENT OF WORK.

6. THE CONTRACTOR SHALL PLAN WORK TO PROVIDE ADEQUATE PROTECTION FOR PERSONS AND PROPERTY AT ALL TIMES, AND EXECUTE THE WORK IN SUCH A MANNER TO AVOID ANY HAZARD TO PERSONS AND PROPERTY AS NECESSARY.

7. MINIMUM RACEWAY SIZE SHALL BE 3/4-IN. INCREASE RACEWAY SIZE AS REQUIRED TO LIMIT RACEWAY FILL RATIO TO LESS THAN 40% FULL.

8. ALL CONDUCTORS SHALL BE COPPER.

9. ALL FEEDERS AND BRANCH CIRCUITS SHALL INCLUDE A GREEN INSULATED GROUND CONDUCTOR, SIZE PER NATIONAL ELECTRICAL CODE, OR AS SHOWN, CONNECTED TO EACH DEVICE AND OUTLET BOX ON THE CIRCUIT AND TO THE PANELBOARD GROUND BUS. PROVIDE A DEDICATED NEUTRAL CONDUCTOR FOR EACH BRANCH CIRCUIT. MULTIPLE BRANCH CIRCUITS IN ONE RACEWAY REQUIRE ONLY ONE GROUND CONDUCTOR.

10. ALL SAFETY DISCONNECTS SHALL BE HEAVY DUTY NEMA 3R NON-FUSED TYPE.

11. REFER TO ONE-LINE DIAGRAMS, SCHEDULES, AND TABLES FOR CONDUCTOR AND CONDUIT SIZES NOT SHOWN ON PLANS.

12. PROVIDE LABELS ON ALL RECEPTACLES, WALL MOUNTED LIGHT SWITCHES/OCCUPANCY SENSORS AND JUNCTION BOXES INDICATING THE SOURCE PANEL AND CIRCUIT(S). TEXT SHALL BE BLACK 1/4-IN IN HEIGHT PRINTED ON A CLEAR LABEL. HANDWRITTEN LABELS ARE NOT PERMITTED.

13. COORDINATE WALL, FLOOR AND ROOF PENETRATIONS WITH THE CONTRACTING OFFICER.

14. SUPPLEMENTAL STEEL MEMBERS REQUIRED TO SUPPORT ELECTRICAL EQUIPMENT FROM MAIN STRUCTURE SHALL BE PROVIDED BY THE ELECTRICAL CONTRACTOR UNLESS SPECIFICALLY NOTED OTHERWISE.

15. EXACT LOCATIONS OF PANELBOARDS, DISCONNECTS, TIMERS, AND SWITCHES SHALL BE COORDINATED WITH FINAL LOCATIONS OF WALL-MOUNTED ARCHITECTURAL AND MECHANICAL EQUIPMENT. MOUNT DISCONNECTS AND SWITCHES MINIMUM 48" AFF. MOUNT TIMERS MINIMUM 40" AFF.

16. SPECIFICATIONS TAKE PRECEDENCE OVER DRAWINGS. HOWEVER, ITEMS SHOWN ON DRAWING BUT NOT IN THE SPECIFICATIONS ARE REQUIRED WITHIN THE PROJECT SCOPE. IN ADDITION, SPECIFIC ITEMS SHOWN ON THE DRAWINGS TAKE PRECEDENCE OVER SPECIFICATIONS IN CASES WHERE THE SPECIFICATION HAS OPTIONS.

17. ALL EQUIPMENT INSTALLED IN THIS PROJECT SHALL COMPLY WITH THE "BUY AMERICAN ACT". BASIS OF DESIGN SHOWN ON SCHEDULES IS TO ESTABLISH A STANDARD OF QUALITY, NOT TO LIMIT COMPETITION. EQUIVALENT EQUIPMENT FROM ANOTHER MANUFACTURER IS ACCEPTABLE.

18. EQUIPMENT AND FIXTURES MUST HAVE INGRESS PROTECTION (IP) RATINGS SUITABLE FOR A WET ENVIRONMENT.

19. PROVIDE WEATHERPROOF COVERS FOR ALL SWITCHES.

20. THE CONTRACTOR SHALL COORDINATE WITH THE ARCHITECTURAL, MECHANICAL, CIVIL DRAWINGS AND SPECIFICATIONS FOR EXACT LOCATION OF EQUIPMENT. ALL WORK SHALL BE COORDINATED WITH THE WORK OF OTHER TRADES TO AVOID INTERFERENCE. REFER TO MECHANICAL DRAWINGS FOR PIPES, DUCTS, AND MECHANICAL EQUIPMENT.

ABBREVIATIONS

ABBR.	DESCRIPTION	ABBR.	DESCRIPTION
A / AMP	AMPERE(S)	HP	HORSE POWER : HEAT PUMP
ACCU	AIR COOLED CONDENSING UNIT	IMC	INTERMEDIATE METAL CONDUIT
AC	ALTERNATING CURRENT	JB	JUNCTION BOX
AC	AIR CURTAIN : ABOVE COUNTER	K	KILO
AF	AMPERE FRAME	KAIC	THOUSAND AMPERE INTERRUPT CAPACITY
AFF	ABOVE FINISHED FLOOR	KCMIL	THOUSANDS OF CIRCULAR MILS
AFG	ABOVE FINISHED GRADE	KV	KILOVOLT
AHU	AIR HANDLING UNIT	KVA	KILOVOLT-AMPERES
AIC	AMPERE INTERRUPT CAPACITY	KW	KILOWATT
AL	ALUMINUM	KWHR	KILOWATT - HOUR
AT	AMP TRIP	L	LENGTH
ATS	AUTOMATIC TRANSFER SWITCH	LAN	LOCAL AREA NETWORK
AUTO	AUTOMATIC	LTG	LIGHTING
AUX	AUXILIARY	MAX	MAXIMUM
AWG	AMERICAN WIRE GUAGE	MCA	MINIMUM CIRCUIT AMPACITY
BRKR	BREAKER	MCB	MAIN CIRCUIT BREAKER
BLDG	BUILDING	MCC	MOTOR CONTROL CENTER
C	CONDUIT	MGB	MAIN GROUND BAR
CAT	CATEGORY	MH	MANHOLE / MOUNTING HEIGHT
CB	CIRCUIT BREAKER	MIN	MINIMUM
CCT	CORRELATED COLOR TEMPERATURE	MLO	MAIN LUGS ONLY
CCTV	CLOSED CIRCUIT TELEVISION	MTD	MOUNTED
CFCI	CONTRACTOR FURNISHED/ INSTALLED	N	NEUTRAL
CKT	CIRCUIT	NAT	NATIONAL
CLG	CEILING	NEC	NATIONAL ELEC CODE
CMH	COMMUNICATIONS MANHOLE	NEMA	NATIONAL ELEC MANUFACTURER'S ASSOCIATION
COMM	COMMUNICATIONS	NFPA	NATIONAL FIRE PROTECTION ASSOCIATION
CP	CONDENSATE PUMP	NC	NORMALLY CLOSED
CPT	CONTROL POWER TRANSFORMER	NESC	NATIONAL ELEC SAFETY CODE
CRI	COLOR RENDERING INDEX	NL	NIGHT LIGHT
CT	CURRENT TRANSFORMER	NO	NORMALLY OPEN
CTR	COUNTER	NTS	NOT TO SCALE
CU	COPPER : CONDENSING UNIT	P	POLE(S)
D	DEPTH	PF	POWER FACTOR
DC	DIRECT CURRENT	PH	PHASE
DISC	DISCONNECT	PNL	PANEL : PANELBOARD
DIST	DISTRIBUTION	PTAC	PACKAGED THRU-WALL AIR CONDITIONER
DPST	DOUBLE POLE SINGLE THROW	PVC	POLYVINYL CHLORIDE
DPDT	DOUBLE POLE DOUBLE THROW	QTY	QUANTITY
EC	EMPTY CONDUIT	REC	RECEPTACLE
EF	EXHAUST FAN	RMC	RIGID METAL CONDUIT
ELEC	ELECTRICAL	RTU	ROOF TOP UNIT
EMER	EMERGENCY	RVNR	REDUCED VOLTAGE NON-REVERSING
EMH	ELECTRICAL MANHOLE	SA	SURGE ARRESTORS
EMT	ELECTRICAL METALLIC TUBING	SBB	SUPPLEMENTAL BONDING BUSBAR
EPA	EFFECTIVE PROJECTED AREA	SCCR	SHORT CIRCUIT CURRENT RATING
EQUIP	EQUIPMENT	SF	SUPPLY FAN
ETC.	ETCETERA	SPD	SURGE PROTECTIVE DEVICE
ETR	EXISTING TO REMAIN	SPDT	SINGLE POLE DOUBLE THROW
EUH	ELECTRIC UNIT HEATER	SPEC	SPECIFICATIONS
EWH / EWC	ELECTRIC WATER HEATER / COOLER	SPST	SINGLE POLE SINGLE THROW
EX / EXIST	EXISTING	SWBD	SWITCHBOARD
EXP	EXPLOSION PROOF	SWGR	SWITCHGEAR
EXT	EXTERIOR	TBB	TELECOMMUNICATION BONDING BUSBAR
F	FUSE	TMGB	TELECOMMUNICATION MAIN GROUNDING BUSBAR
FACP	FIRE ALARM CONTROL PANEL	TOL	THERMAL OVERLOAD
FCU	FAN COIL UNIT	TYP	TYPICAL
FLEX	FLEXIBLE	UH	UNIT HEATER
G / GND	GROUND	UOI	UNLESS OTHERWISE INDICATED
GFGI	GOVERNMENT FURNISHED / INSTALLED	UL	UNDERWRITERS LABORATORY
GFI / GFCI	GROUND FAULT (CIRCUIT) INTERRUPTER	W	WATTS : WIDTH
GRS	GALVANIZED RIGID STEEL	WP	WEATHERPROOF
GUH	GAS UNIT HEATER	XFMR	TRANSFORMER
GWH	GAS WATER HEATER	Z	IMPEDANCE
H / HT	HEIGHT	***	*ABBREVIATIONS ABOVE ARE FOR ELECTRICAL SHEETS ONLY. NOT ALL MAY BE USED.*
HOA	HAND-OFF AUTOMATIC		

GENERAL SYMBOLS LEGEND

(NOT ALL SYMBOLS MAY APPLY, TYP.)

SYMBOL / KEY	DESCRIPTION
LA1:13	PANELBOARD AND CIRCUIT DESIGNATION
	RACEWAY CONCEALED IN WALL OR CEILING OR EXPOSED ON STRUCTURE AS REQUIRED
	RACEWAY CONCEALED UNDER FLOOR OR BELOW GRADE. UNDER SLAB APPLICATIONS: RUN BELOW GRAVEL
LA1:13	HOMERUN TO PANELBOARD - LETTERS INDICATE PANEL, NUMBERS INDICATE CIRCUIT
	EXISTING WORK LINEWEIGHT
	NEW WORK LINE WEIGHT

POWER OUTLET AND COMMUNICATIONS LEGEND

SYMBOL / KEY	DESCRIPTION
	DUPLEX RECEPTACLE, 20A, 120V, MH = 18" AFF UOI
(42)	ELECTRICAL OR COMMUNICATION DEVICE, MH = AT ELEVATION AFF INDICATED (42" AFF SHOWN)
	TWO 20A, 120V DUPLEX RECEPTACLES MTD. IN A TWO GANG BOX, MH=18" AFF UOI
	WATERTIGHT LOCKABLE RECEPTACLE, 20A, 208V, MOUNTED TO CEILING STRUCTURE
	DUPLEX RECEPTACLE, 20A, 120V, GROUND FAULT INTERRUPTING, MH=44" AFF UOI
	DUPLEX RECEPTACLE, 20A, 120V, GROUND FAULT INTERRUPT, WP WHILE IN USE COVER, MH=18" AFF UOI
	DATA OUTLET WITH 3/4" C. STUBBED 6" ABOVE CLG OR TO JOIST. MH=18" AFF UOI
	BACKBOARD

LIGHTING AND SWITCHING LEGEND

SYMBOL / KEY	DESCRIPTION
	LIGHT FIXTURE, RECESSED, PENDANT OR SURFACE MTD.
	LIGHT FIXTURE, STRIP LUMINARE, SURFACE MTD.
	LIGHT FIXTURE, RECESSED TYPE DOWLIGHT.
	LIGHT FIXTURE, WALL MTD.
$*	SWITCH (* = TYPE)
$	SINGLE POLE SWITCH
$2	DOUBLE POLE
$3	THREE WAY
$4	FOUR WAY
$3P	THREE POLE
$VS	WALL BOX VACANCY SENSOR
$OS	WALL BOX OCCUPANCY SENSOR
$D	DIMMER
$VS,D	WALL BOX VACANCY SENSOR W/ DIMMER

SYMBOL / KEY	DESCRIPTION
	EXIT LUMINAIRE, WALL OR CEILING MTD. ARROWS INDICATE DIRECTION, SHADING INDICATES LIGHTED FACES
	LUMINAIRE CONNECTED TO EMERGENCY CIRCUIT. TO INCLUDE BATTERY BACK-UP, GENERATOR, INVERTER, ETC. SEE PLANS
A a $a	UPPERCASE LETTER INDICATES LUMINAIRE TYPE. LOWERCASE LETTER INDICATES CONTROLS/ SWITCH SYSTEM.
TC	TIME CLOCK
VS	VACANCY SENSOR
OS	OCCUPANCY SENSOR
PES	PHOTOELECTRIC SWITCH
C	LOCAL CONTACTOR
$a	LOWERCASE LETTER INDICATES EQUIPMENT CONTROLLED

ONE-LINE DIAGRAM, SCHEDULE, AND DISTRIBUTION LEGEND

SYMBOL / KEY	DESCRIPTION
####	FEEDER KEY
	DISCONNECT SWITCH DIST
	CKT BREAK DIST BOARD MTD.
	FUSE DIST BOARD MTD.
	FUSED DISC SWITCH UNDER 600V
	GROUND
	XFMR
	GENERATOR
M	METER
SPD	SURGE PROTECTIVE DEVICE
GFI	GROUND FAULT INTERRUPTER
TC	TIMECLOCK
PES	PHOTOELECTRIC SWITCH
VFD	VARIABLE FREQUENCY DRIVE
PB	PULL BOX
T	TRANSFORMER (PLAN VIEW)

SYMBOL / KEY	DESCRIPTION
#*	CONTINUATION, UPSTREAM LABEL
	LOCAL DISCONNECT
C	LOCAL CONTACTOR
PNL	PANELBOARD (ONE-LINE)
*	TRANSFER SWITCH (* = TYPE) (ATS : AUTOMATIC) (MTS: MANUAL)
*	ELECTRICAL DISTRIBUTION EQUIPMENT (* = TYPE) (MDB : MAIN DIST BOARD) (MCC : MOTOR CONTROL CENTER) (DB: DIST BOARD) (BR: BUS RISER)
	PANELBOARD (PLAN VIEW)
	MOTOR
J	JUNCTION BOX

THE Johnson • M'Adams FIRM P.A.
ARCHITECTS | ENGINEERS | PLANNERS | SURVEYING | MANAGEMENT
P.O. BOX 513, GREENWOOD, MISSISSIPPI - (662) 455-4943

NO.	DATE	BY	DESCRIPTION

REVISIONS

A-E FIRM	USDA
PROJECT MANAGER: RFP	EPM: K. MAGEE
DESIGNER: TMT	PPM: XXX
CHECKED BY: DRL	SAFETY & HEALTH: XXX
JOB #: 3625	REAL PROPERTY: XXX

STATE OF MISSISSIPPI — STEPHEN T. DUKE — ENGINEER — 35781 — 02/23/26

USDA Agricultural Research Service

USDA AGRICULTURAL RESEARCH SERVICE
JAMIE WHITTEN DELTA STATES RESEARCH CENTER
DESIGN TO REPLACE BLDG. 7 GREENHOUSE 3
STONEVILLE, MISSISSIPPI

ELECTRICAL LEGEND AND NOTES

PROJECT NO.	AGRICULTURAL RESEARCH SERVICE	SHEET
XXX	SOUTHEAST AREA	E001
DATE: 2/24/26	STONEVILLE, MS	33 OF 42

J:\greenwood\2025 Jobs\3625 USDA B7 R43 + Head House Stoneville\07 Working Folder\Elec\E001.dwg
Feb 24, 2026 - 9:08am

KEYED NOTES:

1. DEMOLISH EXISTING CONDUIT/CIRCUITRY BACK TO PANEL. TURN BREAKER OFF AND LABEL AS SPARE.
2. BID OPTION #1: DEMOLISH EXISTING CONDUIT/CIRCUITRY BACK TO PANEL. TURN BREAKER OFF AND LABEL AS SPARE.
3. BID OPTION #1: THE CONTRACTOR SHALL DEMOLISH ALL EXISTING LIGHT FIXTURES. PROTECT EXISTING CIRCUITRY AND LIGHTING CONTROLS THROUGHOUT DEMOLITION AND RECONNECT TO NEW FIXTURES. SEE E100 FOR NEW FIXTURE LAYOUT.

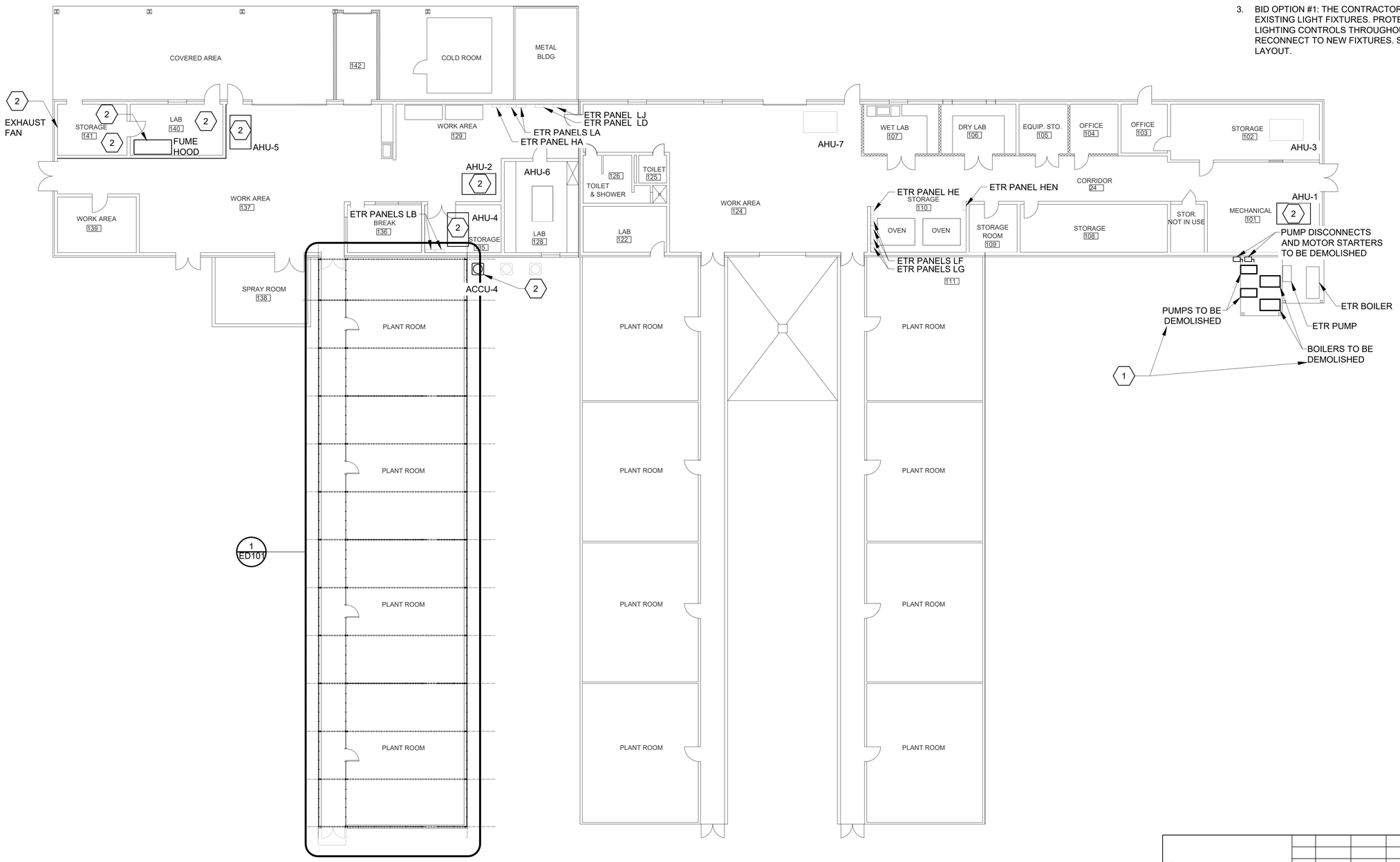

1 ED100 OVERALL ELECTRICAL DEMO PLAN
SCALE: 3/32"=1'-0"

16' 8' 0 16'
SCALE: 3/32" = 1'-0"

THE Johnson • M'Adams FIRM P.A.
ARCHITECT•ENGINEER•PLANNER•SURVEYING•MANAGEMENT
P.O. BOX 513, GREENWOOD, MISSISSIPPI - (662) 455-4943

NO.	DATE	BY	DESCRIPTION

REVISIONS

A-E FIRM	USDA
PROJECT MANAGER: RFP	EPM: K. MAGEE
DESIGNER: TMT	PPM: XXX
CHECKED BY: DRL	SAFETY & HEALTH: XXX
JOB #: 3625	REAL PROPERTY: XXX

USDA Agricultural Research Service

USDA AGRICULTURAL RESEARCH SERVICE
JAMIE WHITTEN DELTA STATES RESEARCH CENTER
DESIGN TO REPLACE BLDG. 7 GREENHOUSE 3
STONEVILLE, MISSISSIPPI

OVERALL ELECTRICAL DEMO PLAN

PROJECT NO.	AGRICULTURAL RESEARCH SERVICE	SHEET
XXX	SOUTHEAST AREA	ED100
DATE: 2/24/26	STONEVILLE, MS	34 OF 42

BRADEN T. DUKES
ENGINEER
02/24/26
35781
STATE OF MISSISSIPPI

J:\greenwood\2025 Jobs\3625 USDA B7 GH3 + Heat House Stoneville\07 Working Folder\Elec\ED100.dwg
Feb 24, 2026 - 9:09am

GENERAL NOTES:

A. SEE ARCHITECTURAL AND MECHANICAL DRAWINGS FOR ADDITIONAL DEMOLITION.

B. INFORMATION SHOWN ON THESE DRAWINGS IS PROVIDED TO SHOW THE GENERAL SCOPE OF THE WORK. ALL EQUIPMENT, LIGHTING, RACEWAYS, AND CIRCUITRY IN GREENHOUSE 3 SHALL BE DEMOLISHED IN THEIR ENTIRETY UNLESS OTHERWISE NOTED.

C. THE OWNER RESERVES THE FIRST RIGHT OF REFUSAL FOR ALL DEMOLISHED EQUIPMENT AND MATERIALS. REMOVE AND STORE SUCH MATERIALS ON SITE WHERE DIRECTED BY THE CONTRACTING OFFICER. ALL EQUIPMENT AND MATERIALS THAT THE OWNER DOES NOT CHOOSE TO KEEP SHALL BECOME THE PROPERTY OF THE CONTRACTOR AND SHALL BE REMOVED FROM THE PROPERTY AND DISCARDED IN ACCORDANCE WITH ALL FEDERAL, STATE, AND LOCAL LAWS AND REGULATIONS.

KEYED NOTES:

1. PLYWOOD BACK BOARD SHALL BE DEMOLISHED ALONG WITH ALL ELECTRICAL EQUIPMENT INCLUDING, TIMERS, FANS, PUMPS, DISCONNECTS, AND CONTROLS.

DEMO LEGEND:

- PS — PORCELAIN SOCKET FIXTURE TO BE DEMOLISHED
- EXISTING RECEPTACLE TO BE DEMOLISHED
- EF — EXISTING EXHAUST FAN TO BE DEMOLISHED
- WO — EXISTING MOTORIZED WINDOW OPERATOR TO BE DEMOLISHED
- DISCONNECT SWITCH TO BE DEMOLISHED
- TIME CLOCK TO BE DEMOLISHED
- PLYWOOD BACK BOARD TO BE DEMOLISHED

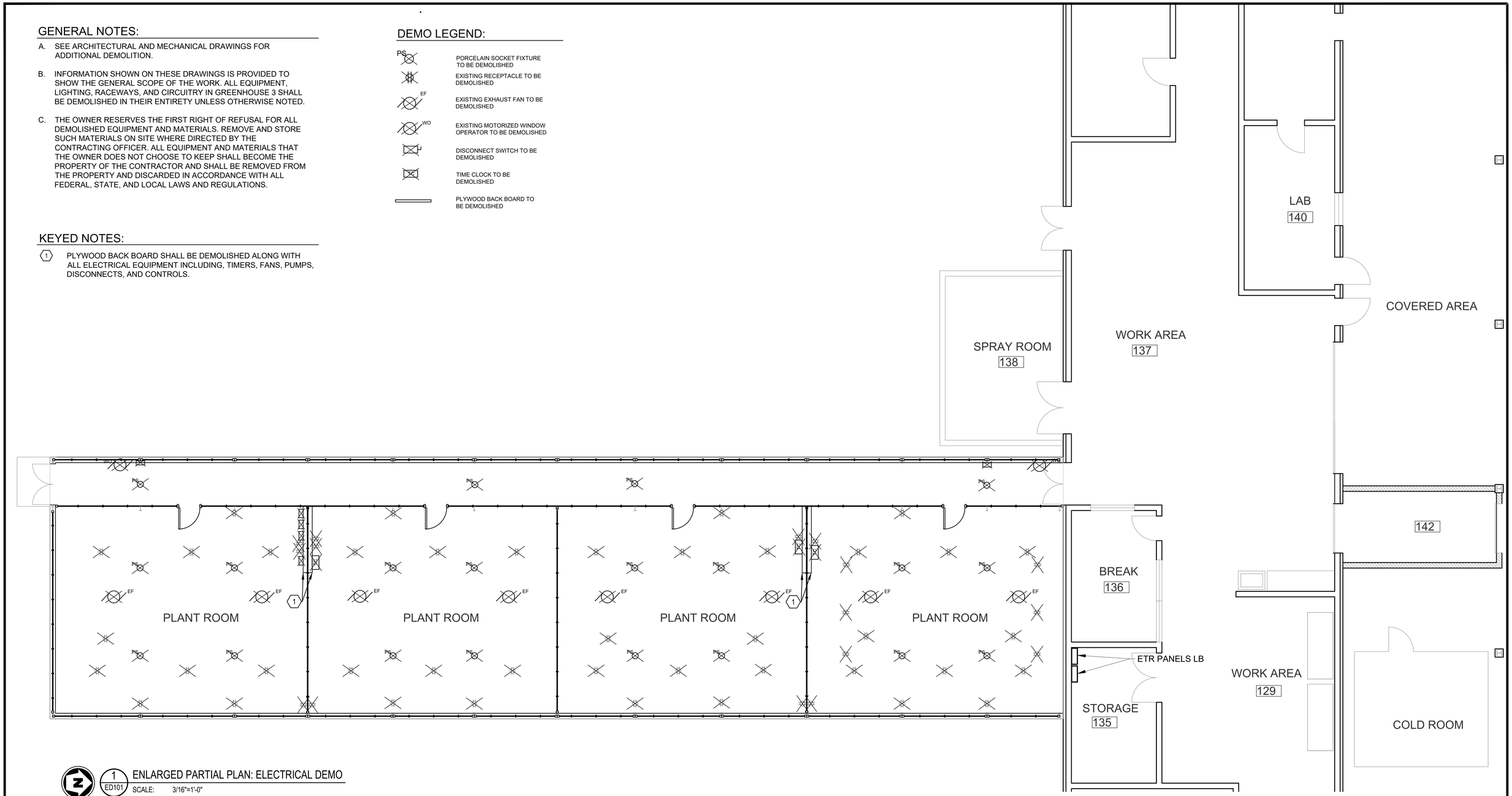

1 / ED101 ENLARGED PARTIAL PLAN: ELECTRICAL DEMO

SCALE: 3/16"=1'-0"

0 2' 4' 8' 16'

SCALE: 3/16"= 1'-0"

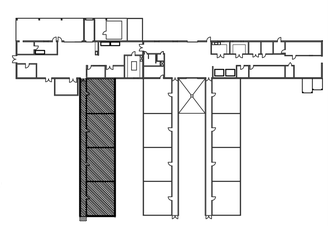

BRADEN T. DUNN — ENGINEER — 02/23/26 — 35781 — STATE OF MISSISSIPPI

THE Johnson-McAdams FIRM P.A.
ARCHITECTS/ENGINEERS • PLANNING • SURVEYING • MANAGEMENT
P.O. BOX 910, GREENWOOD, MISSISSIPPI - (662) 455-4443

NO.	DATE	BY	DESCRIPTION

REVISIONS

A-E FIRM	USDA
PROJECT MANAGER: RFP	EPM: K. MAGEE
DESIGNER: TMT	PPM: XXX
CHECKED BY: DRL	SAFETY & HEALTH: XXX
JOB #: 3625	REAL PROPERTY: XXX

USDA — Agricultural Research Service

USDA AGRICULTURAL RESEARCH SERVICE
JAMIE WHITTEN DELTA STATES RESEARCH CENTER
DESIGN TO REPLACE BLDG. 7 GREENHOUSE 3
STONEVILLE, MISSISSIPPI

ENLARGED PARTIAL PLAN: ELECTRICAL DEMO

PROJECT NO.	AGRICULTURAL RESEARCH SERVICE	SHEET
XXX	SOUTHEAST AREA	ED101
DATE: 2/24/26	STONEVILLE, MS	35 OF 42

J:\greenwood\2025 Jobs\3625 USDA B7 GH3 + Head House Stoneville\07 Working Folder\Elec\ED101.dwg
Feb 24, 2026 - 9:09am

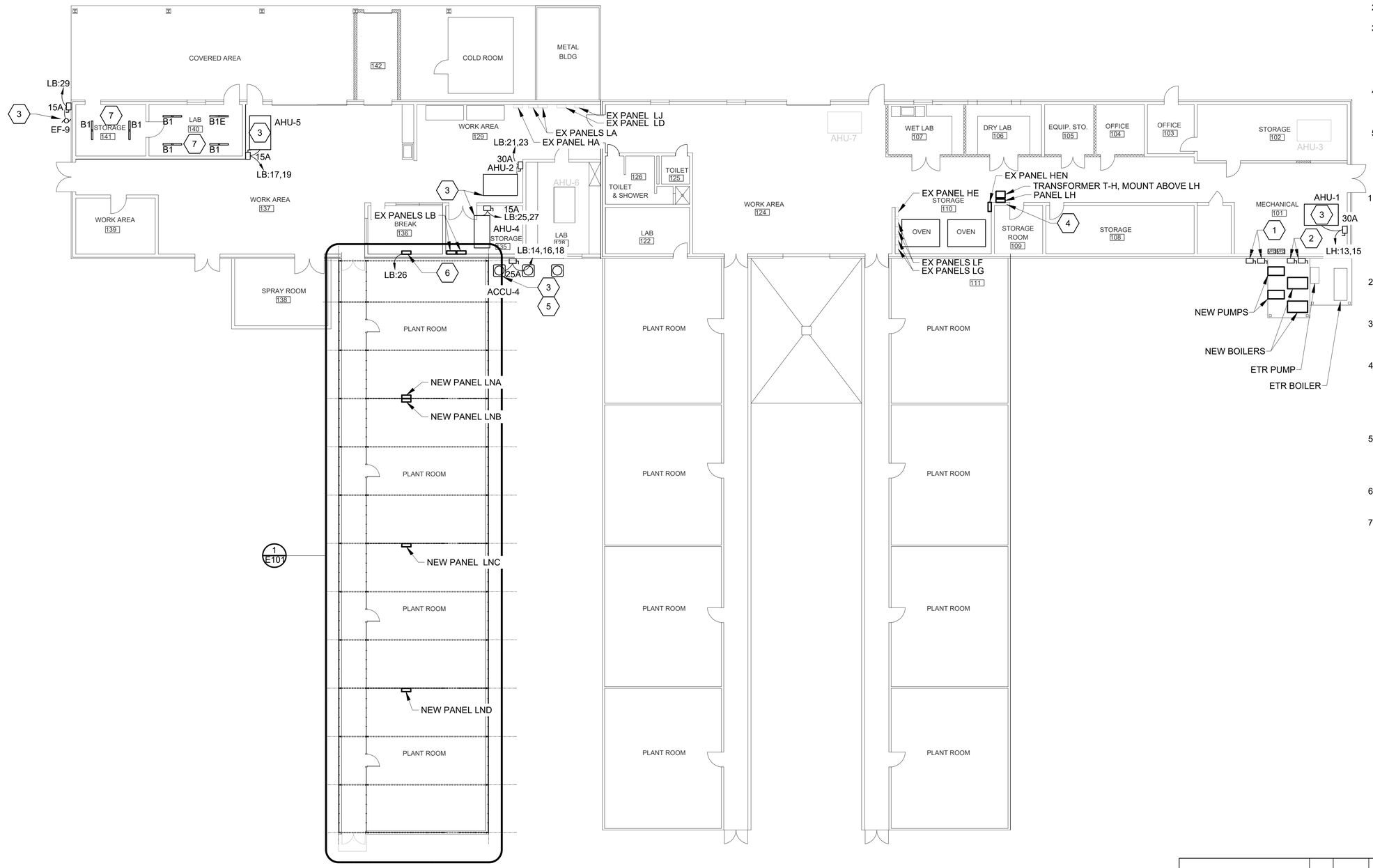

1 E100 OVERALL ELECTRICAL PLAN
SCALE: 3/32"=1'-0"

16' 8' 0 16'
SCALE: 3/32" = 1'-0"

GENERAL NOTES:

1. ALL CONDUIT ASSOCIATED WITH THE GREENHOUSES MUST BE UV RESISTANT, SCHEDULE 80 PVC.
2. ALL CIRCUITRY MUST BE XHHW-2.
3. ALL JUNCTION BOXES ASSOCIATED WITH THE GREENHOUSES MUST BE NONMETALLIC PVC, NEMA 4X RATED. BOXES MUST BE UV RESISTANT AND FURNISHED WITH GASKETED COVERS.
4. ALL RECEPTACLES MUST HAVE A WEATHERPROOF COVER AND BE GFI TYPE OR FED WITH A GFI BREAKER.
5. ALL WALL PENETRATIONS MUST BE WEATHER-TIGHT SEALED AND CAULKED.

KEYED NOTES:

1. NEW PUMP DISCONNECTS (30/3/3R). HOME RUN TO BREAKERS LH:17,19,21 AND LH:23,25,27. VFD PROVIDED BY THE MECHANICAL CONTRACTOR AND INSTALLED BY THE ELECTRICAL CONTRACTOR. REFER TO DETAIL 4/E500.
2. NEW BOILER DISCONNECTS (30/1/3R). HOME RUN TO BREAKERS LH:29 AND LH:2.
3. ALL WORK ASSOCIATED WITH UNIT MUST BE ADDED UNDER BID OPTION #1.
4. TRANSFORMER T-H MUST BE MOUNTED ABOVE PANEL LH. MOUNT TRANSFORMER T-H IN A MANNER TO ALLOW FOR CONDUITS TO EXIT THE TOP OF PANEL LH. REFER TO DETAIL 6/E500.
5. EXISTING DISCONNECT IS LOCATED DIRECTLY BEHIND UNIT. MOVE DISCONNECT TO HAVE AT LEAST 3 FT IN FRONT OF IT.
6. GROWLINK ANNUNCIATOR BOX. REFER TO DETAIL 5/E500.
7. BID OPTION #1: RECONNECT EXISTING CIRCUITRY AND LIGHTING CONTROLS MADE AVAILABLE DURING DEMOLITION IN THIS ROOM.

BRADEN T. DUKES
DATE SIGNED 02/24/26
35781
STATE OF MISSISSIPPI

THE Johnson - M^Adams FIRM P.A.
ARCHITECT-ENGINEERS • PLANNERS • SURVEYORS • MANAGEMENT
P.O. BOX 510, GREENWOOD, MISSISSIPPI - (662) 455-4943

NO.	DATE	BY	DESCRIPTION

REVISIONS

A-E FIRM	USDA
PROJECT MANAGER RFP	EPM K. MAGEE
DESIGNER TMT	PPM XXX
CHECKED BY DRL	SAFETY & HEALTH XXX
JOB # 3625	REAL PROPERTY XXX

USDA

USDA Agricultural Research Service

USDA AGRICULTURAL RESEARCH SERVICE
JAMIE WHITTEN DELTA STATES RESEARCH CENTER
DESIGN TO REPLACE BLDG. 7 GREENHOUSE 3
STONEVILLE, MISSISSIPPI

OVERALL ELECTRICAL PLAN

PROJECT NO. XXX	AGRICULTURAL RESEARCH SERVICE	SHEET
DATE 2/24/26	SOUTHEAST AREA STONEVILLE, MS	E100

36 OF 42

J:\greenwood\2025 Jobs\3625 USDA B7 GH3 + Head House Stoneville\07 Working Folder\Elec\E100.dwg
Feb 24, 2026 – 9:09am

GENERAL NOTES:

1. ALL CONDUIT ASSOCIATED WITH THE GREENHOUSES MUST BE UV RESISTANT, SCHEDULE 80 PVC.
2. ALL CIRCUITRY MUST BE XHHW-2.
3. ALL JUNCTION BOXES ASSOCIATED WITH THE GREENHOUSES MUST BE NONMETALLIC PVC, NEMA 4X RATED BOXES MUST BE UV RESISTANT AND FURNISHED WITH GASKETED COVERS.
4. ALL RECEPTACLES MUST HAVE A WEATHERPROOF COVER AND BE GFI TYPE OR FED WITH A GFI BREAKER.
5. ALL WALL PENETRATIONS MUST BE WEATHER-TIGHT PROPERLY SEALED AND CAULKED.
6. PROVIDE JUNCTION BOX AND LIQUID TIGHT FLEXIBLE NONMETALLIC CONDUIT WITHIN 3' OF ALL EXHAUST FAN AND MOTOR CONNECTIONS.

KEYED NOTES:

1. MARINE GRADE PLYWOOD BACKBOARD.
2. CONTROLLER GROW MASTER MICRO GROW. PROVIDED BY THE MECHANICAL CONTRACTOR AND INSTALLED BY THE ELECTRICAL CONTRACTOR.
3. 30A, 1-POLE, NEMA 4X HEAVY DUTY DISCONNECT.

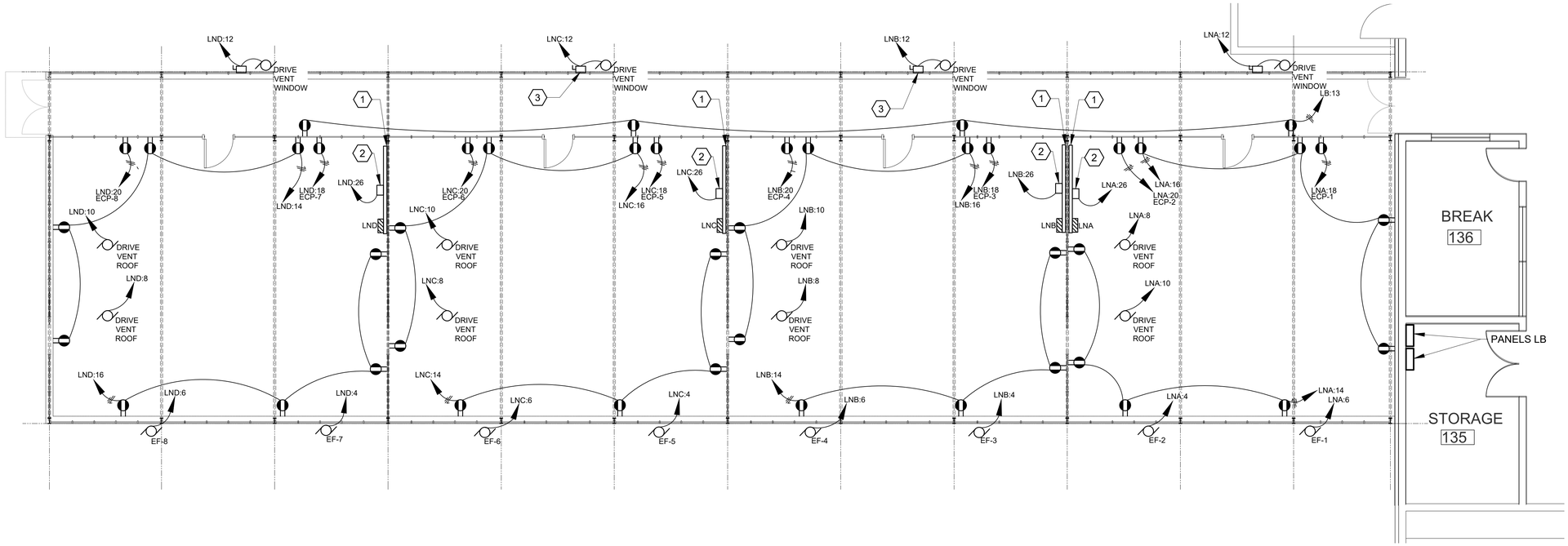

1 E101 ENLARGED PARTIAL PLAN: ELECTRICAL

SCALE: 3/16"=1'-0"

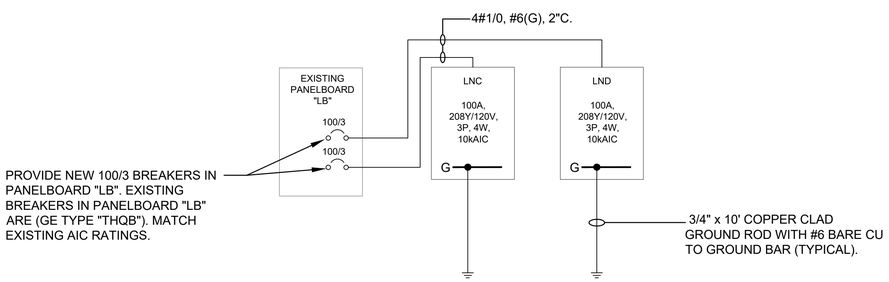

2 E101 PARTIAL ELECTRICAL RISER DIAGRAM FOR LNA AND LNB

SCALE: N.T.S.

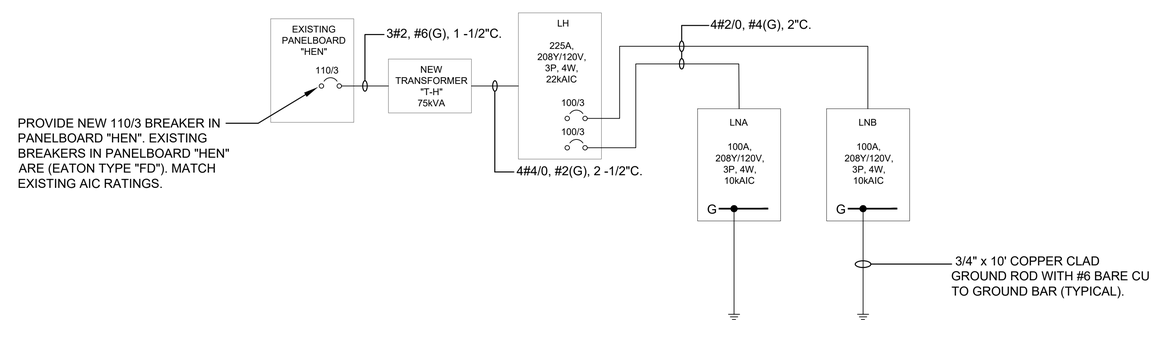

3 E101 PARTIAL ELECTRICAL RISER DIAGRAM FOR LNC AND LND

SCALE: N.T.S.

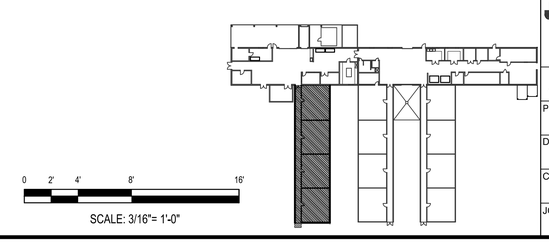

0 2' 4' 8' 16'

SCALE: 3/16"= 1'-0"

THE Johnson-McAdams FIRM P.A.
ARCHITECTS/ENGINEERS / PLANNERS / SURVEYING / MANAGEMENT
P.O. BOX 513, GREENWOOD, MISSISSIPPI - (662) 455-4943

NO.	DATE	BY	DESCRIPTION

REVISIONS

A-E FIRM	USDA
PROJECT MANAGER: RFP	EPM: K. MAGEE
DESIGNER: TMT	PPM: XXX
CHECKED BY: DRL	SAFETY & HEALTH: XXX
JOB #: 3625	REAL PROPERTY: XXX

USDA Agricultural Research Service

USDA AGRICULTURAL RESEARCH SERVICE
JAMIE WHITTEN DELTA STATES RESEARCH CENTER
DESIGN TO REPLACE BLDG. 7 GREENHOUSE 3
STONEVILLE, MISSISSIPPI

ENLARGED PARTIAL PLAN: ELECTRICAL

PROJECT NO.	AGRICULTURAL RESEARCH SERVICE	SHEET
XXX	SOUTHEAST AREA	E101
DATE: 2/24/26	STONEVILLE, MS	37 OF 42

BRADEN T. DUNN OWNER 02/24/26 35781 STATE OF MISSISSIPPI

J:\greenwood\2025 Jobs\3625 USDA B7 0143 + Hood House Stoneville\07 Working Folder\Dwg\E101.dwg
Feb 24, 2026 - 8:09am

KEYED NOTES:

1. ALL WORK WITH ASSOCIATED UNIT SHALL BE ADDED UNDER BID OPTION #1. MOUNT DISCONNECT ON METAL STRUT RACK.

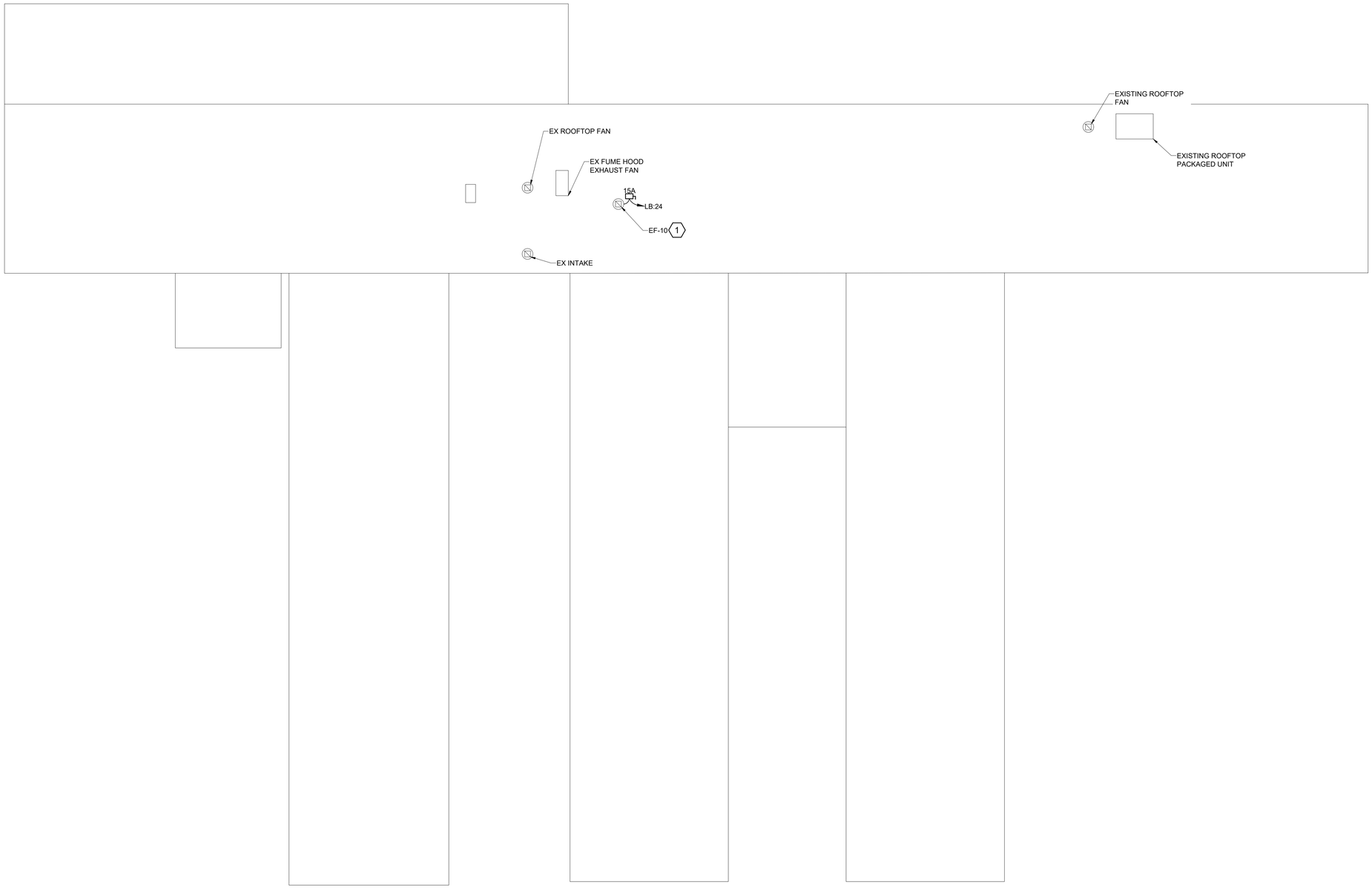

1 / E102 ELECTRICAL ROOF PLAN

SCALE: 3/32"=1'-0"

16' 8' 0 16'

SCALE: 3/32" = 1'-0"

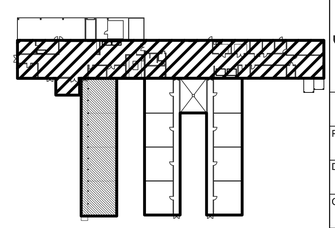

BRADEN T. DUKES ENGINEER 02/24/26 35781 STATE OF MISSISSIPPI

THE Johnson · M'Adams FIRM P.A.
ARCHITECT·ENGINEER·S • PLANNING • SURVEYING • MANAGEMENT
P.O. BOX 313, GREENWOOD, MISSISSIPPI - (662) 455-4543

NO.	DATE	BY	DESCRIPTION

REVISIONS

A-E FIRM	USDA
PROJECT MANAGER RPP	EPM K. MAGEE
DESIGNER TMT	PPM
CHECKED BY DRL	SAFETY & HEALTH
JOB # 3625	REAL PROPERTY

USDA

USDA Agricultural Research Service

USDA AGRICULTURAL RESEARCH SERVICE
JAMIE WHITTEN DELTA STATES RESEARCH CENTER
DESIGN TO REPLACE BUILDING 7 GREENHOUSE 3
STONEVILLE, MISSISSIPPI

ELECTRICAL ROOF PLAN

PROJECT NO.	AGRICULTURAL RESEARCH SERVICE	SHEET
DATE 2/24/26	SOUTHEAST AREA STONEVILLE, MS	E102
		38 OF 42

J:\greenwood\2025 Jobs\3625 USDA B7 GH3 + Heat House Stoneville\07 Working Folder\Elec\E102.dwg
Feb 24, 2026 - 9:09am

GENERAL NOTES:

1. CONTACTORS SHALL BE MOUNTED IN NEMA 3R BOX.
2. LIGHT SWITCHES SHALL HAVE WATER PROOF COVERS.
3. THE ELECTRICAL CONTRACTOR SHALL INCLUDE APPROX. 270' (30' X 9 ROWS) OF UNISTRUT IN THEIR BID PRICE FOR EACH OF THE 4 GREENHOUSES FOR GROW LIGHT MOUNTING PROVISIONS. VERIFY EXACT LAYOUT WITH THE CONTRACTING OFFICER PRIOR TO ROUGH-IN. UNISTRUT SYSTEM SHALL BE SECURED TO THE BUILDING'S STRUCTURE ABOVE. THE ELECTRICAL CONTRACTOR SHALL PROVIDE THREE STAINLESS STEEL ALL-THREAD RODS SECURED TO THE CEILING STRUCTURE FOR EVERY 10' OF UNISTRUT AS REQUIRED TO MAKE A FULLY OPERATIONAL AND SECURE GROW FIXTURE MOUNTING SYSTEM. THE WALLS AND CEILING SHALL AT NO POINT SUPPORT THE UNISTRUT MOUNTING SYSTEM. ALL UNISTRUT SHALL BE ALUMINUM. ALL UNISTRUT HARDWARE AND ALL-THREAD ROD SHALL BE STAINLESS STEEL. WALL MOUNT AS MUCH CONDUIT AS POSSIBLE. SEE DETAIL 3/EL101.

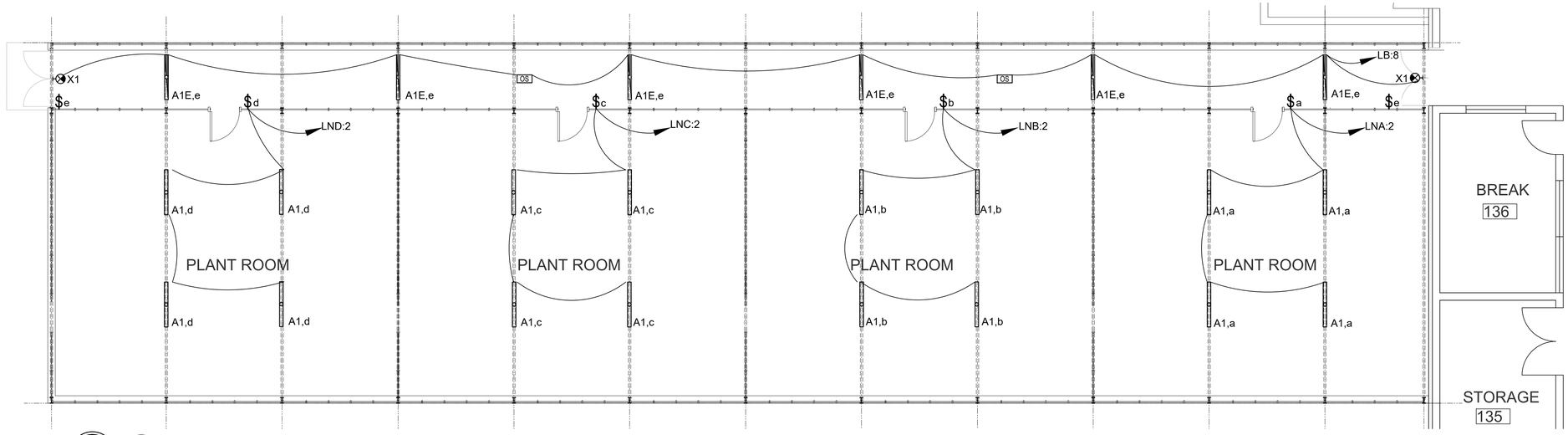

1 EL101 ENLARGED PARTIAL PLAN: GENERAL LIGHTING
SCALE: 3/16"=1'-0"

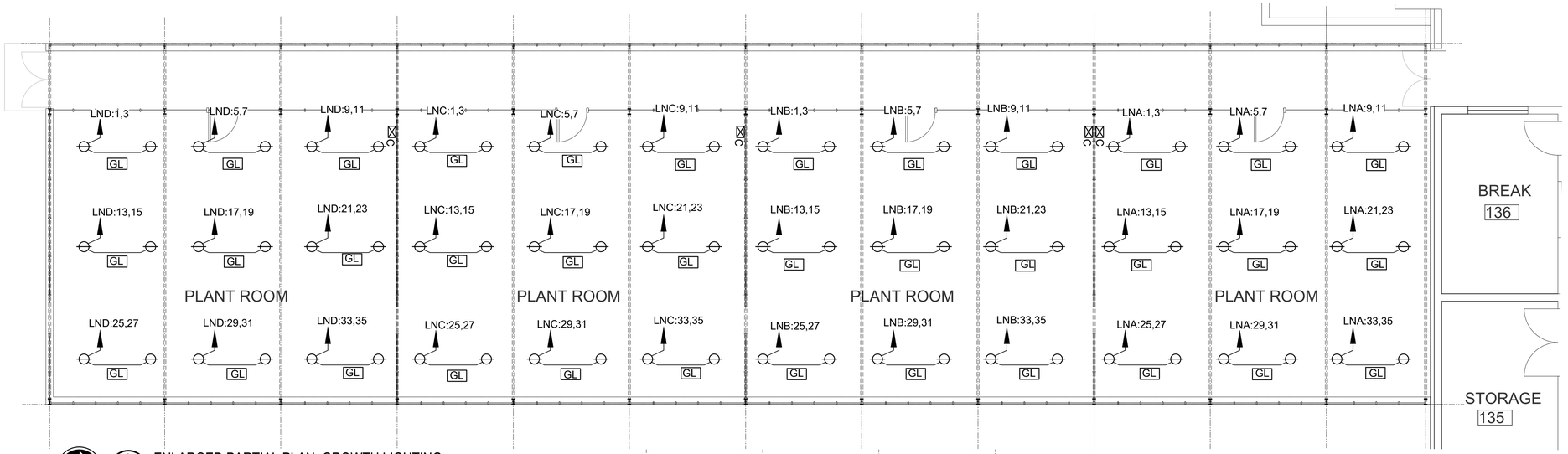

2 EL101 ENLARGED PARTIAL PLAN: GROWTH LIGHTING
SCALE: 3/16"=1'-0"

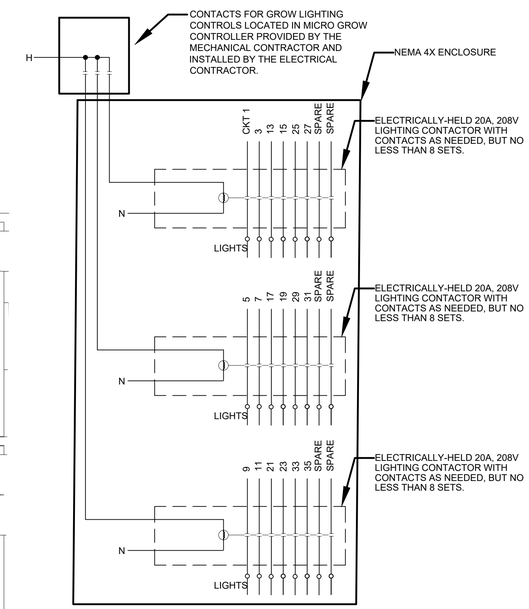

4 EL101 TYPICAL MICRO GROW LIGHTING CONTACTOR DETAIL
SCALE: N.T.S.

1 5/8" x 1 5/8", 12 GAUGE ALUMINUM SUPPORT STRUT. BOLT TO STRUCTURE WITH STAINLESS STEEL FASTENERS (DO NOT WELD). PROVIDE ADDITIONAL STRUCTURAL BRACING, CLIPS AND OTHER HARDWARE AS REQUIRED. PROVIDE SHOP DRAWING OF PLANNED INSTALLATION TO ARCHITECT. FOR APPROVAL PRIOR TO BEGINNING CONSTRUCTION.

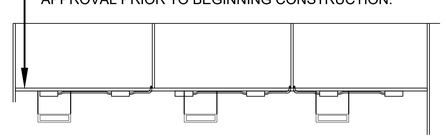

3 EL101 LIGHTING PLAN DETAIL
SCALE: N.T.S.

LIGHTING CALCULATIONS

ROOM	AVERAGE	AVG/MIN	HEIGHT
CORRIDOR	10 FC	1.9	0 FT
PLANT ROOM 1	10 FC	1.8	0 FT
PLANT ROOM 2	10 FC	1.8	0 FT
PLANT ROOM 3	10 FC	1.8	0 FT
PLANT ROOM 4	10 FC	2	0 FT

BRADEN T. DUPREE
MANAGER
02/24/26
35781
STATE OF MISSISSIPPI

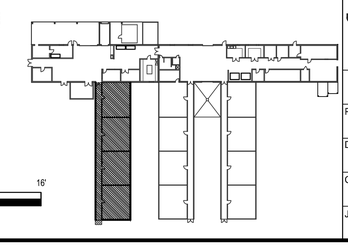

0 2' 4' 8' 16'
SCALE: 3/16"= 1'-0"

THE Johnson - M'Adams FIRM P.A.
ARCHITECTS/ENGINEERS • PLANNING • SURVEYING • MANAGEMENT
P.O. BOX 510, GREENWOOD, MISSISSIPPI - (662) 455-6543

NO.	DATE	BY	DESCRIPTION

REVISIONS

USDA Agricultural Research Service

USDA AGRICULTURAL RESEARCH SERVICE
JAMIE WHITTEN DELTA STATES RESEARCH CENTER
DESIGN TO REPLACE BLDG. 7 GREENHOUSE 3
STONEVILLE, MISSISSIPPI

ENLARGED PARTIAL PLAN: ELECTRICAL LIGHTING

A-E FIRM	USDA
PROJECT MANAGER RFP	EPM K. MAGEE
DESIGNER TMT	PPM XXX
CHECKED BY DRL	SAFETY & HEALTH XXX
JOB # 3625	REAL PROPERTY XXX

PROJECT NO.	AGRICULTURAL RESEARCH SERVICE	SHEET
XXX	SOUTHEAST AREA	EL101
DATE 2/24/26	STONEVILLE, MS	39 OF 42

J:\greenwood\2025 Jobs\3625 USDA B7 GH3 + Head House Stoneville\07 Working Folder\Dwg\EL101.dwg
Feb 24, 2026 - 9:08am

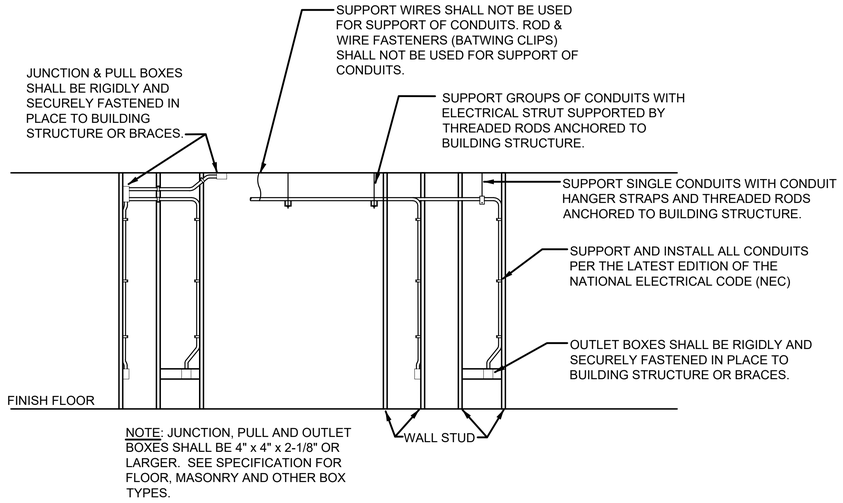

1 / E500 JUNCTION & OUTLET BOX DETAIL

SCALE: N.T.S.

RECEPTACLE DETAIL NOTES:

A. THESE DRAWINGS ARE BASED ON THE BEST INFORMATION AVAILABLE AT THE TIME OF DESIGN. COORDINATE WITH THE MILLWORK CONTRACTOR TO DETERMINE THE EXACT LOCATION OF OUTLETS BEING PLACED IN AND AROUND MILLWORK.

B. RECEPTACLES SHOWN AS GFI MAY BE NON GFI TYPE RECEPTACLES IF FED FROM A 20/1 GFI BREAKER OR THE LOAD SIDE OF A GFI RECEPTACLE IN THE SAME ROOM, ON THE SAME CIRCUIT AND RATED 20 AMP FEED-THRU CAPACITY. COVER PLATES SHALL BE CLEARLY MARKED GFI.

C. NON GFI RECEPTACLES SHALL NOT BE CONNECTED IN A FEED-THRU MANNER. WIRE CONNECTIONS IN RECEPTACLE BOXES SHALL BE MADE IN A PIGTAIL MANNER AS SHOWN IN RECEPTACLE DETAIL.

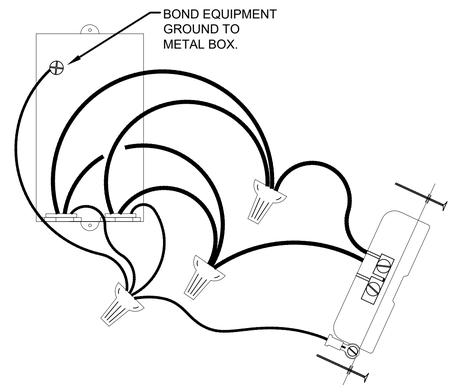

2 / E500 RECEPTACLE DETAIL

SCALE: N.T.S.

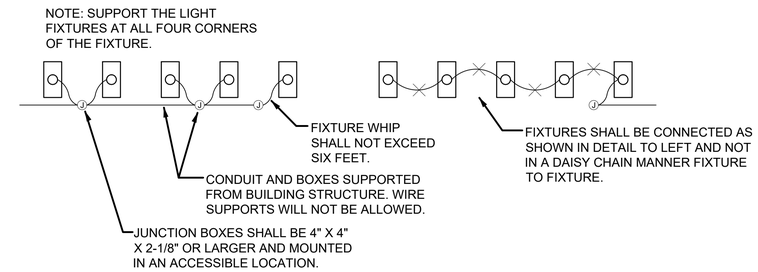

3 / E500 FIXTURE CONNECTION DETAIL

SCALE: N.T.S.

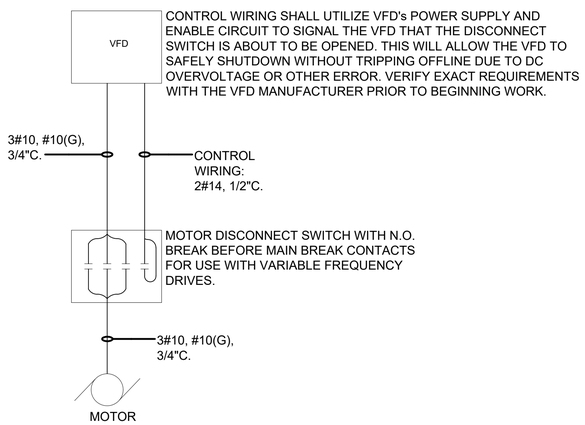

4 / E500 PUMP DISCONNECT AND VFD DETAIL

SCALE: N.T.S.

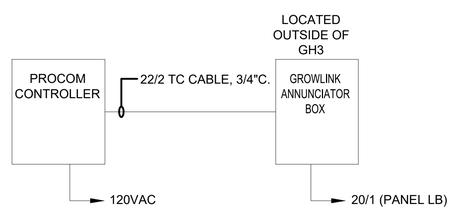

NOTE: THE GREENHOUSE ENVIRONMENTAL CONTROL SYSTEM (MICROGROW OR APPROVED EQUAL) FURNISHED BY THE MECHANICAL CONTRACTOR AND INSTALLED BY THE ELECTRICAL CONTRACTOR SHALL BE PROGRAMMED AND COMMISSIONED AS A COMPLETE AND FULLY OPERATIONAL SYSTEM. THE CONTRACTOR SHALL COORDINATE DIRECTLY WITH THE GREENHOUSE CONTROL SYSTEM MANUFACTURER AND/OR AUTHORIZED REPRESENTATIVE TO VERIFY ALL EQUIPMENT REQUIREMENTS, WIRING METHODS, AND ANNUNCIATION.

5 / E500 GROWLINK ANNUNCIATOR DETAIL

SCALE: N.T.S.

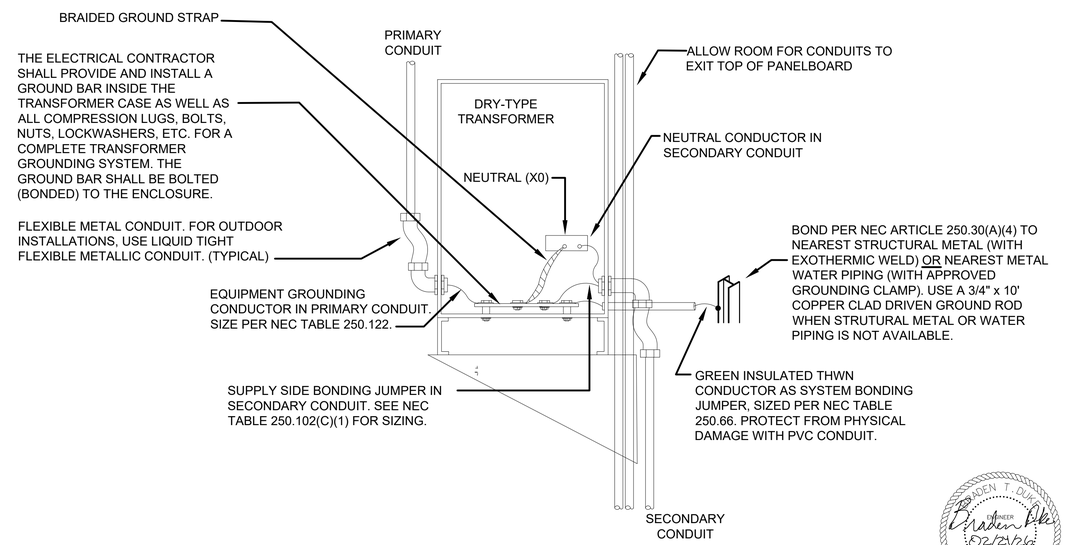

6 / E500 DRY-TYPE TRANSFORMER DETAIL

SCALE: N.T.S.

THE Johnson • McAdams FIRM P.A.
ARCHITECT/ENGINEERING • PLANNING • SURVEYING • MANAGEMENT
P.O. BOX 910, GREENWOOD, MISSISSIPPI - (662) 455-9443

NO.	DATE	BY	DESCRIPTION

REVISIONS

A-E FIRM	USDA
PROJECT MANAGER: RFP	EPM: K. MAGEE
DESIGNER: TMT	PPM: XXX
CHECKED BY: DRL	SAFETY & HEALTH: XXX
JOB #: 3625	REAL PROPERTY: XXX

USDA Agricultural Research Service

USDA AGRICULTURAL RESEARCH SERVICE
JAMIE WHITTEN DELTA STATES RESEARCH CENTER
DESIGN TO REPLACE BLDG. 7 GREENHOUSE 3
STONEVILLE, MISSISSIPPI

ELECTRICAL DETAILS

PROJECT NO.	AGRICULTURAL RESEARCH SERVICE	SHEET
XXX	SOUTHEAST AREA	E500
DATE: 2/24/26	STONEVILLE, MS	40 OF 42

J:\greenwood\2025 Jobs\3625 USDA B7 GH3 + Head House Stoneville\07 Working Folder\Elec\E500.dwg
Feb 24, 2026 – 9:09am

Panel Name: LNA
Panel Location: GH3
Voltage: 120/208V
Phase/Wire: 3PH/4W
Minimum Interrupting Rating: 10K
New/Existing: New
MLO or Main C.B.: MCB
Surface or Flush: SURFACE
Frame Amps: 100
Grounding: EQUIPMENT GROUND
Sections: ONE SECTION - 42X
Nema Rating: NEMA 4X

Load VA Ph A	Load VA Ph B	Load VA Ph C	Branch Load Data	Wire	Breaker Trip	Breaker Pole	No.	Ph.	No.	Breaker Trip	Breaker Pole	Notes	Wire	Branch Load Data	Load VA Ph A	Load VA Ph B	Load VA Ph C
592			GROW LIGHTS		20	2	1	a	2	20	1			GENERAL LIGHTING	155		
	592						3	b	4	20	1			EF-1		1500	
		592	GROW LIGHTS		20	2	5	c	6	20	1			EF-2			1500
592							7	a	8	20	1			ROOF VENT	900		
	592		GROW LIGHTS		20	2	9	b	10	20	1			ROOF VENT		900	
		592					11	c	12	20	1			WINDOW VENT			900
592			GROW LIGHTS		20	2	13	a	14	20	1			RECEPTACLE	720		
	592						15	b	16	20	1			RECEPTACLE		720	
		592	GROW LIGHTS		20	2	17	c	18	20	1			ECP-1			300
592							19	a	20	20	1			ECP-2	300		
	592		GROW LIGHTS		20	2	21	b	22	20	1			SPARE			
		592					23	c	24	20	1			SPARE			
592			GROW LIGHTS		20	2	25	a	26	20	1			MICRO GROW CONTROLLER	500		
	592						27	b	28	20	1			SPARE			
		592	GROW LIGHTS		20	2	29	c	30	20	1			SPARE			
592							31	a	32	20	1			SPARE			
	592		GROW LIGHTS		20	2	33	b	34	20	1			SPARE			
		592					35	c	36	20	1			SPARE			
			SPARE		20	1	37	a	38	20	1			SPARE			
			SPARE		20	1	39	b	40	20	1			SPARE			
			SPARE		20	1	41	c	42	20	1			SPARE			
3552	3552	3552												Sum per phase (VA) right side	2575	3120	2700
2575	3120	2700															
6127	6672	6252															
9%																	
56 amps																	
60 amps																	

Total Connected (VA): 19051
Total Connected Amps: 56
Calculated Load (Amps) @ 95% 53

Panel Name: LNB
Panel Location: GH3
Voltage: 120/208V
Phase/Wire: 3PH/4W
Minimum Interrupting Rating: 10K
New/Existing: New
MLO or Main C.B.: MCB
Surface or Flush: SURFACE
Frame Amps: 100
Grounding: EQUIPMENT GROUND
Sections: ONE SECTION - 42X
Nema Rating: NEMA 4X

Load VA Ph A	Load VA Ph B	Load VA Ph C	Branch Load Data	Wire	Breaker Trip	Breaker Pole	No.	Ph.	No.	Breaker Trip	Breaker Pole	Notes	Wire	Branch Load Data	Load VA Ph A	Load VA Ph B	Load VA Ph C
592			GROW LIGHTS		20	2	1	a	2	20	1			GENERAL LIGHTING	155		
	592						3	b	4	20	1			EF-3		1500	
		592	GROW LIGHTS		20	2	5	c	6	20	1			EF-4			1500
592							7	a	8	20	1			ROOF VENT	900		
	592		GROW LIGHTS		20	2	9	b	10	20	1			ROOF VENT		900	
		592					11	c	12	20	1			WINDOW VENT			900
592			GROW LIGHTS		20	2	13	a	14	20	1			RECEPTACLE	720		
	592						15	b	16	20	1			RECEPTACLE		720	
		592	GROW LIGHTS		20	2	17	c	18	20	1			ECP-3			300
592							19	a	20	20	1			ECP-4	300		
	592		GROW LIGHTS		20	2	21	b	22	20	1			SPARE			
		592					23	c	24	20	1			SPARE			
592			GROW LIGHTS		20	2	25	a	26	20	1			MICRO GROW CONTROLLER	500		
	592						27	b	28	20	1			SPARE			
		592	GROW LIGHTS		20	2	29	c	30	20	1			SPARE			
592							31	a	32	20	1			SPARE			
	592		GROW LIGHTS		20	2	33	b	34	20	1			SPARE			
		592					35	c	36	20	1			SPARE			
			SPARE		20	1	37	a	38	20	1			SPARE			
			SPARE		20	1	39	b	40	20	1			SPARE			
			SPARE		20	1	41	c	42	20	1			SPARE			
3552	3552	3552												Sum per phase (VA) right side	2575	3120	2700
2575	3120	2700															
6127	6672	6252															
9%																	
56 amps																	
60 amps																	

Total Connected (VA): 19051
Total Connected Amps: 56
Calculated Load (Amps) @ 95% 53

Panel Name: LH
Panel Location: BLDG 7
Voltage: 120/208V
Phase/Wire: 3PH/4W
Minimum Interrupting Rating: 22K
New/Existing: New
MLO or Main C.B.: MCB
Surface or Flush: SURFACE
Frame Amps: 225
Grounding: EQUIPMENT GROUND
Sections: ONE SECTION - 30X
Nema Rating: NEMA 1

Load VA Ph A	Load VA Ph B	Load VA Ph C	Branch Load Data	Wire	Breaker Trip	Breaker Pole	No.	Ph.	No.	Breaker Trip	Breaker Pole	Notes	Wire	Branch Load Data	Load VA Ph A	Load VA Ph B	Load VA Ph C
6127			LNA		100	3	1	a	2	20	1			B-2	940		
	6672						3	b	4	20	1			SPARE			
		6252					5	c	6	20	1			SPARE			
6127			LNB		100	3	7	a	8	20	1			SPARE			
	6672						9	b	10	20	1			SPARE			
		6252					11	c	12	20	1			SPARE			
1415			AHU-1		30	2	13	a	14	20	1			SPARE			
	1415						15	b	16	20	1			SPARE			
		793	HTWP-1		20	3	17	c	18	20	1			SPARE			
793							19	a	20	20	1			SPARE			
	793						21	b	22	20	1			SPARE			
		793	HTWP-2		20	3	23	c	24	20	1			SPARE			
793							25	a	26	20	1			SPARE			
	793						27	b	28	20	1			SPARE			
		940	B-1		20	1	29	c	30	20	1			SPARE			
15255	16345	15030												Sum per phase (VA) right side	940		
940																	
16195	16345	15030															
8%																	
136 amps																	
150 amps																	

Total Connected (VA): 47570
Total Connected Amps: 136
Calculated Load (Amps) @ 100% 136

Panel Name: LNC
Panel Location: GH3
Voltage: 120/208V
Phase/Wire: 3PH/4W
Minimum Interrupting Rating: 10K
New/Existing: New
MLO or Main C.B.: MCB
Surface or Flush: SURFACE
Frame Amps: 100
Grounding: EQUIPMENT GROUND
Sections: ONE SECTION - 42X
Nema Rating: NEMA 4X

Load VA Ph A	Load VA Ph B	Load VA Ph C	Branch Load Data	Wire	Breaker Trip	Breaker Pole	No.	Ph.	No.	Breaker Trip	Breaker Pole	Notes	Wire	Branch Load Data	Load VA Ph A	Load VA Ph B	Load VA Ph C
592			GROW LIGHTS		20	2	1	a	2	20	1			GENERAL LIGHTING	155		
	592						3	b	4	20	1			EF-5		1500	
		592	GROW LIGHTS		20	2	5	c	6	20	1			EF-6			1500
592							7	a	8	20	1			ROOF VENT	900		
	592		GROW LIGHTS		20	2	9	b	10	20	1			ROOF VENT		900	
		592					11	c	12	20	1			WINDOW VENT			900
592			GROW LIGHTS		20	2	13	a	14	20	1			RECEPTACLE	720		
	592						15	b	16	20	1			RECEPTACLE		720	
		592	GROW LIGHTS		20	2	17	c	18	20	1			ECP-5			300
592							19	a	20	20	1			ECP-6	300		
	592		GROW LIGHTS		20	2	21	b	22	20	1			SPARE			
		592					23	c	24	20	1			SPARE			
592			GROW LIGHTS		20	2	25	a	26	20	1			MICRO GROW CONTROLLER	500		
	592						27	b	28	20	1			SPARE			
		592	GROW LIGHTS		20	2	29	c	30	20	1			SPARE			
592							31	a	32	20	1			SPARE			
	592		GROW LIGHTS		20	2	33	b	34	20	1			SPARE			
		592					35	c	36	20	1			SPARE			
			SPARE		20	1	37	a	38	20	1			SPARE			
			SPARE		20	1	39	b	40	20	1			SPARE			
			SPARE		20	1	41	c	42	20	1			SPARE			
3552	3552	3552												Sum per phase (VA) right side	2575	3120	2700
2575	3120	2700															
6127	6672	6252															
9%																	
56 amps																	
60 amps																	

Total Connected (VA): 19051
Total Connected Amps: 56
Calculated Load (Amps) @ 95% 53

Panel Name: LND
Panel Location: GH3
Voltage: 120/208V
Phase/Wire: 3PH/4W
Minimum Interrupting Rating: 10K
New/Existing: New
MLO or Main C.B.: MCB
Surface or Flush: SURFACE
Frame Amps: 100
Grounding: EQUIPMENT GROUND
Sections: ONE SECTION - 42X
Nema Rating: NEMA 4X

Load VA Ph A	Load VA Ph B	Load VA Ph C	Branch Load Data	Wire	Breaker Trip	Breaker Pole	No.	Ph.	No.	Breaker Trip	Breaker Pole	Notes	Wire	Branch Load Data	Load VA Ph A	Load VA Ph B	Load VA Ph C
592			GROW LIGHTS		20	2	1	a	2	20	1			GENERAL LIGHTING	155		
	592						3	b	4	20	1			EF-7		1500	
		592	GROW LIGHTS		20	2	5	c	6	20	1			EF-8			1500
592							7	a	8	20	1			ROOF VENT	900		
	592		GROW LIGHTS		20	2	9	b	10	20	1			ROOF VENT		900	
		592					11	c	12	20	1			WINDOW VENT			900
592			GROW LIGHTS		20	2	13	a	14	20	1			RECEPTACLE	720		
	592						15	b	16	20	1			RECEPTACLE		720	
		592	GROW LIGHTS		20	2	17	c	18	20	1			ECP-7			300
592							19	a	20	20	1			ECP-8	300		
	592		GROW LIGHTS		20	2	21	b	22	20	1			SPARE			
		592					23	c	24	20	1			SPARE			
592			GROW LIGHTS		20	2	25	a	26	20	1			MICRO GROW CONTROLLER	500		
	592						27	b	28	20	1			SPARE			
		592	GROW LIGHTS		20	2	29	c	30	20	1			SPARE			
592							31	a	32	20	1			SPARE			
	592		GROW LIGHTS		20	2	33	b	34	20	1			SPARE			
		592					35	c	36	20	1			SPARE			
			SPARE		20	1	37	a	38	20	1			SPARE			
			SPARE		20	1	39	b	40	20	1			SPARE			
			SPARE		20	1	41	c	42	20	1			SPARE			
3552	3552	3552												Sum per phase (VA) right side	2575	3120	2700
2575	3120	2700															
6127	6672	6252															
9%																	
56 amps																	
60 amps																	

Total Connected (VA): 19051
Total Connected Amps: 56
Calculated Load (Amps) @ 95% 53

Panel Name: LB
Panel Location: RM 135
Voltage: 120/208V
Phase/Wire: 3PH/4W
Minimum Interrupting Rating:
New/Existing: Existing
MLO or Main C.B.: MCB
Surface or Flush: FLUSH
Frame Amps: 225
Grounding: EQUIPMENT GROUND
Sections: ONE SECTION - 30X
Nema Rating:

Load VA Ph A	Load VA Ph B	Load VA Ph C	Branch Load Data	Wire	Breaker Trip	Breaker Pole	No.	Ph.	No.	Breaker Trip	Breaker Pole	Notes	Wire	Branch Load Data	Load VA Ph A	Load VA Ph B	Load VA Ph C
6350			LNC		100	3	1	a	2	20	1			EXISTING LOAD	1200		
	6350						3	b	4	40	2			SPARE			
		6350					5	c	6								
6350			LND		100	3	7	a	8	20	1			EXISTING LOAD	1200		
	6350						9	b	10	40	2			SPARE			
		6350					11	c	12								
720			GH3 HALL REC		20	1	13	a	14	25	3			ACCU-4	1593		
	233		GH3 HALL LIGHTING		20	1	15	b	16							1593	
		525	AHU-5		15	2	17	c	18								1593
525							19	a	20	40	2			SPARE			
	1415		AHU-2		30	2	21	b	22								
		1415					23	c	24	15	1			EF-10			150
435			AHU-4		15	2	25	a	26	20	1			GH3 ANNUNCIATOR	500		
	435						27	b	28					SPACE			
		667	EF-9		15	1	29	c	30					SPACE			
14380	14783	15307												Sum per phase (VA) right side	4493	1593	1743
4493	1593	1743															
18874	16376	17050															
14%																	
157 amps																	
175 amps																	

Total Connected (VA): 52299
Total Connected Amps: 157
Calculated Load (Amps) @ 100% 157

The Johnson - M'Adams FIRM P.A.
ARCHITECT/ENGINEER • PLANNING • SURVEYING • MANAGEMENT
P.O. BOX 510, GREENWOOD, MISSISSIPPI - (662) 455-4543

NO.	DATE	BY	DESCRIPTION

REVISIONS

A-E FIRM	USDA
PROJECT MANAGER RFP	EPM K. MAGEE
DESIGNER TMT	PPM XXX
CHECKED BY DRL	SAFETY & HEALTH XXX
JOB # 3625	REAL PROPERTY XXX

USDA Agricultural Research Service

USDA AGRICULTURAL RESEARCH SERVICE
JAMIE WHITTEN DELTA STATES RESEARCH CENTER
DESIGN TO REPLACE BLDG. 7 GREENHOUSE 3
STONEVILLE, MISSISSIPPI

PANEL SCHEDULES

PROJECT NO.	AGRICULTURAL RESEARCH SERVICE	SHEET
XXX	SOUTHEAST AREA	E600
DATE 2/24/26	STONEVILLE, MS	41 OF 42

J:\greenwood\2025 Jobs\3625 USDA B7 GH3 + Head House Stoneville\07 Working Folder\Dwg\E600.dwg
Feb 24, 2026 - 9:08am

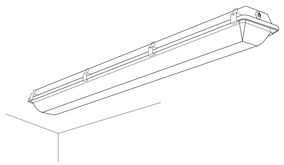

NOTE: THIS SKETCH IS A NON-PROPRIETARY GRAPHIC REPRESENTATION OF A LUMINAIRE THAT MAY MEET THE SPECIFICATION REQUIREMENTS. IT IS NOT INTENDED TO INDICATE A CERTAIN MANUFACTURER OR PREFERENCE.

LUMINAIRE REQUIREMENTS:

1. HOUSING - ONE-PIECE 5VA FIBERGLASS HOUSING WITH INTEGRAL PERIMETER CHANNEL UTILIZING CONTINUOUS POURED-IN-PLACE NEMA 4X GASKET. SIZE AS INDICATED IN LUMINAIRE SCHEDULE.
2. OPTICS - UV-STABILIZED, HIGH-IMPACT, FROSTED POLYCARBONATE LENS.
3. LIGHT SOURCE - SOLID STATE LEDS, 4000K CCT UON, MINIMUM 80 CRI UON, AND MINIMUM EFFICACY OF 90 LUMENS/WATT UON. INITIAL LUMEN OUTPUT AS INDICATED IN LUMINAIRE SCHEDULE.
4. DRIVER - REPLACEABLE, INTEGRAL, HIGH-EFFICIENCY DIMMABLE DRIVER WITH MINIMUM 0.9 PF, OPERATING VOLTAGE OF 120-277V, THERMAL MANAGEMENT, AND < 20% THD. ON/OFF CONTROL AND FULLY DIMMABLE DOWN TO 10% MINIMUM OR AS INDICATED IN LUMINAIRE SCHEDULE.
5. CERTIFICATION - UL LISTED FOR WET LOCATION, ROHS COMPLIANT. COMPLIES WITH IES LM79, LM80 AND TM21 TESTING STANDARDS.
6. MOUNTING - CEILING SURFACE-MOUNTED.
7. OPTIONS - EMERGENCY BATTERY BACK-UP.

LED VAPOR TIGHT

FIXTURE TYPE: A1, A1E, B1, B1E

NOTE: THIS SKETCH IS A NON-PROPRIETARY GRAPHIC REPRESENTATION OF A LUMINAIRE THAT MAY MEET THE SPECIFICATION REQUIREMENTS. IT IS NOT INTENDED TO INDICATE A CERTAIN MANUFACTURER OR PREFERENCE.

LUMINAIRE REQUIREMENTS:

1. HOUSING - DIE-CAST ALUMINUM OR HIGH-IMPACT, UV-STABILIZED, INJECTION-MOLDED THERMOPLASTIC.
2. LIGHT SOURCE - SOLID STATE LEDS.
3. DRIVER - INTEGRAL, HIGH-EFFICIENCY DRIVER WITH MINIMUM 0.9 PF, OPERATING VOLTAGE OF 120/277V, THERMAL MANAGEMENT, AND < 20% THD.
4. CERTIFICATION - NFPA 101, UL LISTED FOR DAMP OR WET LOCATION, AND ROHS COMPLIANT.
5. MOUNTING - SURFACE MOUNTED ON WALL.
6. OPTIONS - RED OR GREEN LETTERING, ONE- OR TWO-SIDED. ELU REMOTE HEAD CAPABILITIES. BATTERY BACKUP.

EXIT SIGN

FIXTURE TYPE: X1

LUMINAIRE SCHEDULE

TYPE	DESCRIPTION	SOURCE				DIMMING	VOLTAGE	TOTAL VA	MANUFACTURER BASIS OF DESIGN		NOTES
		TYPE	LM	CCT(K)	CRI				NAME	CATALOG SERIES	
A1	WET LOCATION 48" LED	LED	3000.00	4000.00	80.00	0-10V	120-277V	19.00	LITHONIA LIGHTING	FEM L48 3000LM LPPFL WD 80CRI 40K	SURFACE MOUNT TO STRUCTURE
A1E	EMERGENCY WET LOCATION 48" LED	LED	3000.00	4000.00	80.00	0-10V	120-277V	19.00	LITHONIA LIGHTING	FEM L48 3000LM LPPFL WD 80CRI 40K E10WCP	SURFACE MOUNT TO STRUCTURE
B1	VAPOR TIGHT 48" LED	LED	6000.00	4000.00	80.00	0-10V	120-277V	38.00	LITHONIA LIGHTING	FEM L48 6000LM LPPFL WD 80CRI 40K	SURFACE MOUNT TO CEILING
B1E	EMERGENCY WET LOCATION 48" LED	LED	6000.00	4000.00	80.00	0-10V	120-277V	38.00	LITHONIA LIGHTING	FEM L48 6000LM LPPFL WD 80CRI 40K E10WCP	SURFACE MOUNT TO CEILING
GL	GROWTH LIGHT	HID	--	--	--	--	208V	1184.00	HYDROFRARM	PHANTOM 60 SERIES PHB6015 1000W	ADJUSTABLE CHAIN HUNG, 4-7FT AFF, PROVIDE FIXTURE WITH WATERTIGHT LOCKABLE 6-15P PLUG
X1	EXIT SIGN	LED	--	--	--	--	120-277V	--	--	--	MOUNT 8FT AFF, PROVIDE ALUMINUM SUPPORT RAIL ABOVE DOOR

BRADEN T. DUKES
ENGINEER
Braden Dukes
02/23/26
35781
STATE OF MISSISSIPPI

THE Johnson-M'Adams FIRM
ARCHITECT/ENGINEER/PLANNER/INTERIOR DESIGNER/SURVEYING/MANAGEMENT
P.O. BOX 513, GREENWOOD, MISSISSIPPI - (662) 455-9943

NO.	DATE	BY	DESCRIPTION

REVISIONS

USDA Agricultural Research Service

USDA AGRICULTURAL RESEARCH SERVICE
JAMIE WHITTEN DELTA STATES RESEARCH CENTER
DESIGN TO REPLACE BLDG. 7 GREENHOUSE 3
STONEVILLE, MISSISSIPPI

LIGHTING SLIDES

A-E FIRM	USDA
PROJECT MANAGER: RFP	EPM: K. MAGEE
DESIGNER: TMT	PPM: XXX
CHECKED BY: DRL	SAFETY & HEALTH: XXX
JOB #: 3625	REAL PROPERTY: XXX

PROJECT NO. XXX	AGRICULTURAL RESEARCH SERVICE SOUTHEAST AREA STONEVILLE, MS	SHEET E700
DATE 2/24/26		42 OF 42

J:\greenwood\2025 Jobs\3625 USDA BT GH3 + Head House Stoneville\07 Working Folder\Elec\E700.dwg
Feb 24, 2026 - 9:06am