U.S. DEPARTMENT OF AGRICULTURE
FOREST SERVICE, REGION 6

CONSTRUCTION PLANS FOR:

LODGEPOLE CREEK BRIDGE DESIGN

AS PART OF DISASTER RELIEF

ROAD 6500000, MP 8.63

NINEMILE CREEK
STRUCTURE NO: 061707000037203
LATITUDE: 47.875845
LONGITUDE: -121.008414

WENATCHEE RIVER RANGER DISTRICT
OKANOGAN-WENATCHEE NATIONAL FOREST
CHELAN COUNTY, WASHINGTON

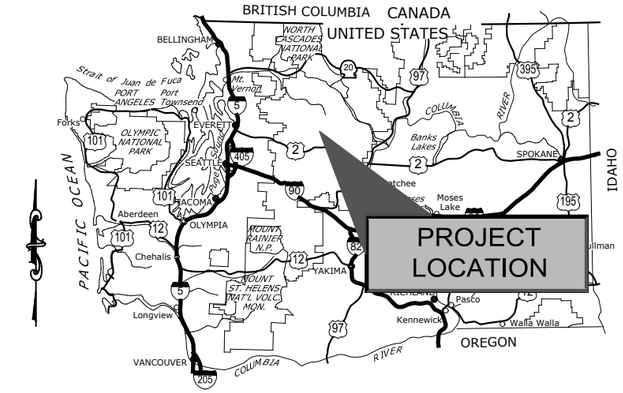

INDEX TO SHEETS

NO.	DESCRIPTION
1	COVER
2	SUMMARY OF ESTIMATED QUANTITIES
3	GENERAL NOTES
4	PROJECT CONTROL & TYPICAL SECTIONS
5	ROAD PLAN & PROFILE
6	BRIDGE GENERAL LAYOUT
7	STRUCTURE EXCAVATION
8	FOUNDATION PLAN
9 -10	RIPRAP PLAN
11 - 12	BORING LOGS
13 - 14	ABUTMENT PLAN, ELEVATION, & DETAILS
15 - 18	SUPERSTRUCTURE PLAN & DETAILS
19 - 29	STREAM SIMULATION DESIGN & DETAILS
30	TRAFFIC CONTROL
XS1 - XS3	ROAD CROSS SECTIONS

MATERIAL SOURCES

GOVERNMENT FURNISHED
STREAM SIMULATION MATERIAL
CONTRACTOR FURNISHED
WASTE SITE
STRUCTURAL BACKFILL
RIPRAP
AGGREGATE BASE, SUBBASE, & SURFACE COURSE

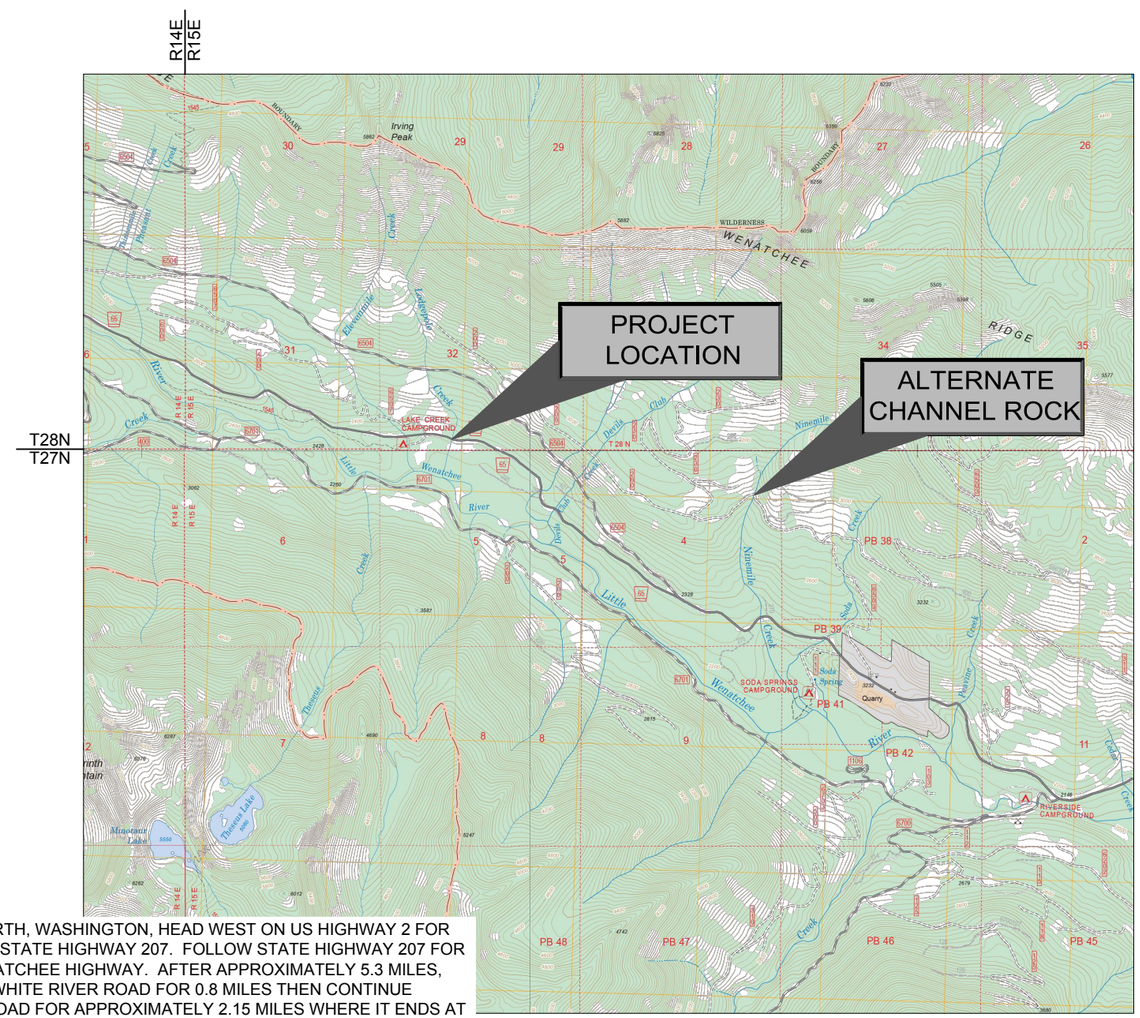

VICINITY MAP

TRAVEL DIRECTIONS: TO ACCESS THE PROJECT AREA FROM LEAVENWORTH, WASHINGTON, HEAD WEST ON US HIGHWAY 2 FOR APPROXIMATELY 15.1 MILES THEN RUN NORTH (RIGHT) ON WASHINGTON STATE HIGHWAY 207. FOLLOW STATE HIGHWAY 207 FOR APPROXIMATELY 4.4 MILES THEN CONTINUE STRAIGHT ON TO LAKE WENATCHEE HIGHWAY. AFTER APPROXIMATELY 5.3 MILES, LAKE WENATCHEE HIGHWAY TURNS INTO WHITE RIVER ROAD. FOLLOW WHITE RIVER ROAD FOR 0.8 MILES THEN CONTINUE STRAIGHT ON LITTLE WENATCHEE ROAD. FOLLOW LITTLE WENATCHEE ROAD FOR APPROXIMATELY 2.15 MILES WHERE IT ENDS AT THE FOREST SERVICE GATE THEN THE ROAD FROM THE GATE ON BECOMES LITTLE WENATCHEE RIVER ROAD (FOREST ROAD 6500). FOLLOW FOREST ROAD 6500 FOR APPROXIMATELY 4.79 MILES TO THE JUNCTION OF THE 6500 AND 6700 ROADS THEN CONTINUE STRAIGHT ON FOREST ROAD 6500 FOR APPROXIMATELY 3.84 MILES TO THE PROJECT SITE.

APPROVED:
TARA UMPHRIES — Digitally signed by TARA UMPHRIES Date: 2026.03.25 16:14:22 -07'00'
FOREST SUPERVISOR — DATE
OKANOGAN-WENATCHEE NATIONAL FOREST

RECOMMENDED:
ERICA TAECKER — Digitally signed by ERICA TAECKER Date: 2026.03.25 15:51:36 -07'00'
DISTRICT RANGER — DATE
WENATCHEE RIVER RANGER DISTRICT

MOLLY HANSEN — Digitally signed by MOLLY HANSEN Date: 2026.03.25 11:08:31 -07'00'
Asst. FOREST ENGINEER — DATE
OKANOGAN-WENATCHEE NATIONAL FOREST

RO SIGNATURES:
TECHNICAL REVIEW:
Kathryn L. Van Hecke, PE — Digitally signed by Kathryn L. Van Hecke, PE Date: 2026.03.26 16:31:50 -07'00'
REGIONAL BRIDGE ENGINEER — DATE
PACIFIC NORTHWEST REGION

APPROVED BY:
AARON CARPENTER — Digitally signed by AARON CARPENTER Date: 2026.04.02 17:20:12 -07'00'
DIRECTOR OF ENGINEERING — DATE
PACIFIC NORTHWEST REGION

AMMON SCOTT GROESBECK
STATE OF WASHINGTON
21028285
REGISTERED PROFESSIONAL ENGINEER
3/18/2026

R34905

DJ&A
ENGINEERS
PLANNERS
SURVEYORS

3/18/26 10:40 PATRICIA.DONNER C:\DJA-PW\WORK\DJA-PROD\DMS53770\7333.30 COVERS.DWG:

BASE SCHEDULE

ITEM NO.	ITEM DESCRIPTION	MEASUREMENT		QTY	COMMENTS
		METHOD	UNIT		
15101	MOBILIZATION	LSQ	LUMP SUM	ALL	INCLUDES TRAFFIC CONTROL.
15201	CONSTRUCTION SURVEY AND STAKING, METHOD 1, TOLERANCE A	LSQ	LUMP SUM	ALL	LICENSED WASHINGTON STATE SURVEYOR REQUIRED
15401	CONTRACTOR TESTING	LSQ	LUMP SUM	ALL	
15713	SOIL EROSION & POLLUTION CONTROL	LSQ	LUMP SUM	ALL	INCLUDES DEWATERING AND FISH SALVAGE. SEE GENERAL NOTES SHEET 28.
20302	REMOVAL OF EXISTING CULVERT, DISPOSAL METHOD A	AQ	EACH	1	REMOVE OFF NATIONAL FOREST LANDS.
20304	REMOVAL OF EXISTING ASPHALT CONCRETE PAVEMENT, DISPOSAL METHOD A	CQ	SQUARE YARD	560	REMOVE OFF NATIONAL FOREST LANDS.
20407	ROAD EXCAVATION	CQ	CUBIC YARD	400	IN PLACE QUANTITY, NOT ADJUSTED FOR SHRINK/SWELL.
20701	EARTHWORK GEOSYNTHETIC, TYPE 4 LONG-TERM EROSION CONTROL BLANKET	CQ	SQUARE YARD	1371	MATERIAL TO BE 100 PERCENT NATURAL FIBER, BIODEGRADABLE MATERIAL ONLY.
20801A	STRUCTURE EXCAVATION	CQ	CUBIC YARD	130	SEE SHEET 7.
20801B	CHANNEL EXCAVATION	CQ	CUBIC YARD	2000	INCLUDES CHANNEL EXCAVATION WITHIN BRIDGE FOOTPRINT. SEE SHEET 22.
20801C	CHANNEL EXCAVATION	CQ	CUBIC YARD	1510	INCLUDES CHANNEL EXCAVATION OUTSIDE BRIDGE FOOTPRINT. SEE SHEET 22.
20803	STRUCTURAL BACKFILL	CQ	CUBIC YARD	70	IN PLACE QUANTITY, NOT ADJUSTED FOR SHRINK/SWELL. COMMERCIAL SOURCE, CERTIFIED WEED FREE.
25101	PLACED RIPRAP, CLASS 4	CQ	CUBIC YARD	160	IN PLACE QUANTITY, NOT ADJUSTED FOR SHRINK/SWELL. COMMERCIAL SOURCE, CERTIFIED WEED FREE.
30202	AGGREGATE BASE, METHOD 2	CQ	TON	115	IN PLACE QUANTITY, NOT ADJUSTED FOR SHRINK/SWELL. COMMERCIAL SOURCE, CERTIFIED WEED FREE. WSDOT 5/8" MINUS ACCEPTABLE SUBSTITUTE
30205	SUBBASE, METHOD 2	CQ	TON	245	IN PLACE QUANTITY, NOT ADJUSTED FOR SHRINK/SWELL. COMMERCIAL SOURCE, CERTIFIED WEED FREE. WSDOT 3" MINUS ACCEPTABLE SUBSTITUTE
40304	ASPHALT CONCRETE, WSDOT, TYPE II	CQ	TON	115	INCLUDES SPEED HUMP ASPHALT
55201	STRUCTURAL CONCRETE, CLASS A(AE), PILE CAP, END DIAPHRAGM, & WINGWALLS	CQ	CUBIC YARD	23	
55301A	PRECAST, PRESTRESSED STRUCTURAL CONCRETE MEMBER, DECKED BULB-TEE	AQ	EACH	1	DIAPHRAGMS ARE INDIRECT TO 55301A & 55301B
55301B	PRECAST, PRESTRESSED STRUCTURAL CONCRETE MEMBER, DECKED BULB-TEE W/ CURB	AQ	EACH	2	DIAPHRAGMS ARE INDIRECT TO 55301A & 55301B
55401	REINFORCING STEEL, GRADE 60, PILE CAP, END DIAPHRAGM, & WINGWALLS	CQ	POUNDS	3100	
56702	MICROPILE	AQ	EACH	10	
56703	MICROPILE LOAD VERIFICATION TEST	AQ	EACH	1	SACRIFICIAL PILE INSTALLATION INCLUDED IN THIS ITEM.
56704	MICROPILE PROOF LOAD TEST	AQ	EACH	2	
62552	SEEDING & MULCHING, DRY METHOD	LSQ	LUMP SUM	ALL	CONTRACTOR FURNISHED SEED. RE-SEED ALL AREAS DISTURBED BY CONSTRUCTION ACTIVITIES. MULCH & STRAW MUST BE FROM AN APPROVED WEED-FREE SOURCE.
63304A	SIGN, ONE LANE BRIDGE PANEL, TYPE III, IV, IX, XI, RETROREFLECTIVE SHEETING	AQ	EACH	2	POSTS, HARDWARE, AND INSTALLATION INDIRECT TO THIS BID ITEM. ONE LANE BRIDGE, W5-3
63304B	SIGN, SPEED HUMP PANEL, TYPE III, IV, IX, XI, RETROREFLECTIVE SHEETING	AQ	EACH	2	POSTS, HARDWARE, AND INSTALLATION INDIRECT TO THIS BID ITEM. SPEED HUMP, W17-1 AND ADVISORY PANEL 25 MPH W13-1P
63304C	SIGN, 25 MPH ADVISORY SPEED PANEL, TYPE III, IV, IX, XI, RETROREFLECTIVE SHEETING	AQ	EACH	2	HARDWARE AND INSTALLATION INDIRECT TO THIS BID ITEM. ADVISORY SPEED PLAQUE 25 MPH, W13-1P, TO BE INSTALLED BELOW SIGN 63304B. SEE SHEET 4.
63307	OBJECT MARKER, TYPE 3	AQ	EACH	4	POSTS, HARDWARE, AND INSTALLATION INDIRECT TO THIS BID ITEM.
64801	PLACED STREAMBED SIMULATION MATERIAL, BED CLASS 2, METHOD A	CQ	CUBIC YARD	20	MATERIAL TO BE SALVAGED FROM EXCAVATION. NOTIFY CO AT LEAST FIVE (5) DAYS PRIOR TO PERFORMING THE WORK AND AFTER MATERIAL SALVAGE IS COMPLETE.
64803	PLACED CHANNEL ROCK FOR BANK MARGINS AND ROCK STRUCTURES, CLASS CR-0, METHOD A	CQ	CUBIC YARD	45	MATERIAL TO BE SALVAGED FROM EXCAVATION. NOTIFY CO AT LEAST FIVE (5) DAYS PRIOR TO PERFORMING THE WORK AND AFTER MATERIAL SALVAGE IS COMPLETE.

OPTION ITEMS

ITEM NO.	ITEM DESCRIPTION	MEASUREMENT		QTY	COMMENTS
		METHOD	UNIT		
62201	EQUIPMENT RENTAL, HYDRAULIC EXCAVATOR WITH THUMB	AQ	HOUR	64	INCLUDES CHANNEL ROCK, ROOTWAD, AND STREAMBED FEATURE PLACEMENT AND ADJUSTMENTS, AND MISCELLANEOUS ITEMS AS DIRECTED BY THE CO.

AQ = ACTUAL QUANTITY LSQ = LUMP SUM QUANTITY CQ = CONTRACT QUANTITY (SEE SECTION 109.02(B) OF THE STANDARD SPECIFICATIONS)

United States Department of Agriculture
Forest Service

REGION 6
PACIFIC NORTHWEST REGION

PROJECT NAME

LODGEPOLE CREEK BRIDGE DESIGN

RD 6500000 MP 8.63

STRUCTURE NO. 061707000037203

OKANOGAN-WENATCHEE NATIONAL FOREST

WENATCHEE RIVER RANGER DISTRICT

DRAWING TITLE

SUMMARY OF ESTIMATED QUANTITIES

DATE MAR-26

ARCHIVE NO. R34905

DESIGNER R. DAWE

DRAWN R. DAWE

CHECKED A. GROESBECK

DWG SHEET NO. 2

SHEET 2 OF 30

PROJECT NO. 7333.30

3/18/26 13:19 PATRICIA.DONNER C:\DJA-PW\WORK\DJA-PROD\DMS53764\7333.30 LODGEPOLE CREEK BRIDGE - DESIGN.DWG;

GENERAL NOTES

BRIDGE DESIGN: STRUCTURE IS DESIGNED FOR HL-93 LOADING IN ACCORDANCE WITH AASHTO LRFD BRIDGE DESIGN SPECIFICATIONS, 9TH EDITION WITH CURRENT INTERIMS.

SEISMIC: SEISMIC PARAMETERS PER GEOTECHNICAL REPORT

SITE CLASS =	D	
PGA =	0.224 G	PEAK GROUND ACCELERATION
SS =	0.514	HORIZONTAL RESPONSE SPECTRAL ACCELERATION COEFFICIENT AT 0.2-SEC PERIOD
S1 =	0.170	HORIZONTAL RESPONSE SPECTRAL ACCELERATION COEFFICIENT AT 1-SEC PERIOD
FPGA =	1.352	SITE FACTOR AT ZERO-PERIOD RANGE OF ACCELERATION RESPONSE SPECTRUM
FA =	1.389	SITE FACTOR FOR SHORT-PERIOD RANGE OF ACCELERATION RESPONSE SPECTRUM
FV =	2.121	SITE FACTOR FOR LONG-PERIOD RANGE OF ACCELERATION RESPONSE SPECTRUM
SDS =	0.714	HORIZONTAL RESPONSE SPECTRAL ACCELERATION COEFFICIENT AT 0.2-S PERIOD MODIFIED BY SHORT-PERIOD SITE FACTOR
SD1 =	0.360	HORIZONTAL RESPONSE SPECTRAL ACCELERATION COEFFICIENT MODIFIED BY LONG-PERIOD SITE FACTOR
AS =	0.303	PEAK SEISMIC GROUND ACCELERATION COEFFICIENT MODIFIED BY SHORT-PERIOD SITE FACTOR
SEISMIC ZONE =	3	SEISMIC ZONE PER AASHTO TABLE 3.10.6-1

GEOTECHNICAL PARAMETERS: SUBSTRUCTURES ARE DESIGNED IN ACCORDANCE WITH THE RECOMMENDATIONS PROVIDED IN THE PROJECT GEOTECHNICAL REPORT (SHANNON & WILSON, INC. PROJECT NUMBER 113461-001, DECEMBER 2025). SEE SHEET 8 OF THIS PLAN SET FOR MICROPILE INFORMATION.

SPECIFICATIONS: CONSTRUCT THE PROJECT IN COMPLIANCE WITH FEDERAL HIGHWAY ADMINISTRATION STANDARD SPECIFICATIONS FOR CONSTRUCTION OF ROAD AND BRIDGES ON FEDERAL HIGHWAY PROJECTS (FP-14) AND APPLICABLE FOREST SERVICE SUPPLEMENTAL SPECIFICATIONS (FSSS).

WILDLIFE FIELD WORK RESTRICTIONS: NO FIELD WORK PRIOR TO AUGUST 1 FOR NORTHERN SPOTTED OWL UNLESS APPROVED IN WRITING BY THE CONTRACTING OFFICER (CO).

DEWATERING & EROSION CONTROL PLAN: SUBMIT A DEWATERING AND SOIL EROSION AND SEDIMENT CONTROL PLAN TO THE CONTRACTING OFFICER FOR APPROVAL AT LEAST THIRTY (30) DAYS PRIOR TO BEGINNING WORK. SEE SECTION 157 OF THE SUPPLEMENTAL SPECIFICATIONS FOR DETAILS. CONSTRUCT TEMPORARY MEANS TO DIVERT THE FLOW OF THE LIVE STREAM AS NECESSARY TO PERFORM WORK. DO NOT ALLOW WATER FROM EXCAVATIONS TO FLOW DIRECTLY INTO THE LIVE STREAM.

TEMPORARY TRAFFIC CONTROL: SUBMIT A TEMPORARY TRAFFIC CONTROL PLAN TO THE CONTRACTING OFFICER FOR APPROVAL AT LEAST THIRTY (30) DAYS PRIOR TO INTENDED USE.

EQUIPMENT STORAGE: STORAGE OF ALL EQUIPMENT ON GOVERNMENT LANDS WILL BE AT A LOCATION APPROVED BY THE CO. IF CONTRACTOR ELECTS TO CAMP NEAR THE EQUIPMENT, OR NEARBY ON THE FOREST, A CAMPING PERMIT IS REQUIRED PRIOR TO CAMPING.

IN-STREAM WORK: ONLY CONDUCT IN-STREAM WORK BETWEEN JULY 1ST AND SEPTEMBER 30TH, HOWEVER ONSITE WORK CAN NOT BEGIN PRIOR TO THE WILDLIFE FIELD RESTRICTIONS WITHOUT APPROVAL.

FISH SALVAGE: FISH SALVAGE IS THE RESPONSIBILITY OF THE CONTRACTOR AND SHALL BE COMPLETED IN ACCORDANCE WITH APPENDIX A OF THE FSSS. SUBMIT A FISH SALVAGE PLAN TO THE CO FOR APPROVAL AT LEAST THIRTY (30) DAYS PRIOR TO BEGINNING THE WORK. NOTIFY THE CO AT LEAST FIVE (5) BUSINESS DAYS PRIOR TO PERFORMING THE WORK AND IMMEDIATELY AFTER FISH SALVAGE IS COMPLETE. ALLOWANCE SHALL BE GIVEN TO THE FOREST SERVICE AND WASHINGTON DEPARTMENT OF FISH AND WILDLIFE TO OBSERVE AND DIRECT ALL SALVAGE OPERATIONS.

DISPOSAL: ALL MATERIALS DESIGNATED FOR REMOVAL BECOME THE PROPERTY OF THE CONTRACTOR AND ARE TO BE DISPOSED OF BY REMOVING FROM THE FOREST IN AN ENVIRONMENTALLY SAFE MANNER IN ACCORDANCE WITH ALL LOCAL, STATE AND FEDERAL REQUIREMENTS. DISPOSE OF EXCESS OR UNSUITABLE MATERIAL OFF USFS LAND PER FSSS, SECTION 105. HAULING OF EXCESS OR UNSUITABLE MATERIAL IS INDIRECT TO ASSOCIATED WORK.

MATERIAL NOTES

CONCRETE: USE CLASS A(AE) OR P(AE) CONCRETE FOR ALL CAST-IN-PLACE AND PRECAST, NON-PRESTRESSED CONCRETE WITH A MINIMUM OF F'C = 4500 PSI AT TWENTY-EIGHT (28) DAYS AND AN ENTRAINED AIR CONTENT IN ACCORDANCE WITH SECTION 552.

USE CLASS "P" PRESTRESSED CONCRETE WITH STRENGTH REQUIREMENTS AS DETERMINED BY THE PRESTRESSED BEAM FABRICATOR, EXCEPT AS FOLLOWS. THE MINIMUM TWENTY-EIGHT (28) DAY COMPRESSIVE STRENGTH IS 5500 PSI (F'C = 5500 PSI) AND THE MINIMUM COMPRESSIVE STRENGTH AT TRANSFER OF PRESTRESS FORCE IS 4500 PSI (F'C = 4500 PSI). AS MINIMUM, USE CONCRETE WITH AN ENTRAINED AIR CONTENT OF 5% ±1% IN THE TOP TWO INCHES OF THE PRESTRESSED BEAM.

SEE BEAM SCHEDULE, SHEETS 17-18 FOR PRESTRESSED BEAM SPECIFICATIONS AND DETAILS.

SUBMIT MIX DESIGN FOR CONCRETE IN ACCORDANCE WITH FP-14. CHAMFER ALL EXPOSED EDGES OF CONCRETE 3/4" AND FILLET ALL ACUTE ANGLES 3/4" UNLESS OTHERWISE NOTED.

REINFORCING STEEL: USE NON-PRESTRESSED REINFORCING OF THE DEFORMED TYPE CONFORMING TO AASHTO M31 (ASTM A615), GRADE 60. CONCRETE COVER SHALL BE AS SHOWN; WHERE NOT SHOWN IT SHALL CONFORM TO AASHTO. CUT AND BEND STEEL IN ACCORDANCE WITH ACI SP-66. EPOXY COATED REINFORCING IS NOT REQUIRED.

PRESTRESSING STEEL: USE PRESTRESSING STEEL OF LOW-RELAXATION PRESTRESSING STRAND CONFORMING TO AASHTO M203, GRADE 270.

MICROPILE: FURNISH STEEL CASING CONFORMING TO API N-80 WITH OUTSIDE DIAMETER OF 9-5/8 INCHES AN 0.545-INCH WALL THICKNESS WITH A YIELD STRESS OF FY = 80,000 PSI. FURNISH GALVANIZED GRADE 60 ALL-THREAD REBAR MEETING THE REQUIREMENTS OF ASTM A615. CENTER REBAR IN MICROPILE WITH CENTRALIZER AS REQUIRED. FILL MICROPILES WITH NEAT CEMENT GROUT, MINIMUM F'C = 5000 PSI.

HARDWARE AND STRUCTURAL STEEL: USE STEEL SHAPES, PLATES AND BARS MEETING THE REQUIREMENTS OF ASTM A36. GALVANIZE ALL STEEL IN ACCORDANCE WITH AASHTO M111 (ASTM A123) EXCEPT WHEN COVERED BY 1 INCH OR MORE OF CONCRETE. USE HARDWARE MEETING THE REQUIREMENTS OF ASTM A307 EXCEPT AS NOTED. GALVANIZE HARDWARE IN ACCORDANCE WITH AASHTO M232 (ASTM A153) UNLESS COVERED BY 1 INCH OR MORE OF CONCRETE.

INSTALLATION OF PRESTRESSED BEAMS: ERECT PRESTRESSED CONCRETE BEAMS WITH VERTICAL VARIATIONS OF NO MORE THAN 1/8" AT CENTERLINE BEARING AND NO MORE THAN 1/4" BETWEEN DECK SURFACES AT ANY POINT ALONG THE BEAM LENGTH. USE GALVANIZED STEEL SHIMS WHERE NECESSARY. ELASTOMERIC BEARING PADS SHALL BE IN ACCORDANCE WITH AASHTO M251. SEE SHEET 14 FOR ADDITIONAL INFORMATION ON BEARING PADS. FURNISH SHIMS THE SAME SIZE AS THE BEARING PADS AND PLACE THE SHIMS BETWEEN THE BEAMS AND THE BEARING PADS. GALVANIZE THE SHIMS IN ACCORDANCE WITH AASHTO M232.

AFTER ERECTING THE BEAMS AND PRIOR TO GROUTING, MEASURE THE VERTICAL DIFFERENCE BETWEEN ADJACENT DECK SURFACES EVERY 10' ALONG THE BRIDGE LENGTH AND SUBMIT THE MEASUREMENTS TO THE CO. DO NOT PROCEED WITH GROUTING THE BEAM KEYWAYS OR ATTEMPT TO LEVEL THE BEAMS UNTIL THE CO HAS REVIEWED AND EVALUATED THE MEASUREMENTS FOR TOLERANCES AND CAMBER OR ERECTION INCONSISTENCIES. IF THE CO DETERMINES THAT A CAMBER ADJUSTMENT/LEVELING PROCEDURE IS REQUIRED, SUBMIT A CAMBER ADJUSTMENT/LEVELING PLAN DESIGNED AND APPROVED BY THE BEAM MANUFACTURER. ANY CAMBER ADJUSTMENT/LEVELING WORK AUTHORIZED BY THE CO MUST BE DONE UNDER THE DIRECTION OF A MANUFACTURER'S REPRESENTATIVE. NOTIFY THE CO IMMEDIATELY OF ANY DAMAGE TO THE BEAMS DURING ERECTION. MAKE NO REPAIRS UNTIL AUTHORIZED BY THE CO.

FABRICATION DRAWINGS: SUBMIT FABRICATION DRAWINGS FOR ALL PRECAST & PRESTRESSED MEMBERS TO THE CO, FOR REVIEW, A MINIMUM OF THIRTY (30) DAYS PRIOR TO FABRICATION.

United States Department of Agriculture
Forest Service

REGION 6
PACIFIC NORTHWEST REGION

PROJECT NAME
LODGEPOLE CREEK BRIDGE DESIGN

RD 6500000 MP 8.63

STRUCTURE NO.
061707000037203

OKANOGAN-WENATCHEE NATIONAL FOREST

WENATCHEE RIVER RANGER DISTRICT

DRAWING TITLE
GENERAL NOTES

DATE
MAR-26

ARCHIVE NO.
R34905

DESIGNER
R. DAWE

DRAWN
R. DAWE

CHECKED
A. GROESBECK

PROJECT NO.
7333.30

DWG SHEET NO.
3

SHEET 3 OF 30

3/18/26 13:19 PATRICIA.DONNER C:\DJA-PW\WORK\DJA-PROD\DMS53764\7333.30 LODGEPOLE CREEK BRIDGE - DESIGN.DWG;

LEGEND

EXISTING FEATURES

- EXISTING EDGE OF ASPHALT
- EXISTING CULVERT
- EXISTING EDGE OF WATER
- 2290 MAJOR CONTOUR (5')
- MINOR CONTOUR (1')

CONTROL POINTS

CONTROL POINT TABLE				
POINT #	NORTHING	EASTING	ELEVATION	DESCRIPTION
CP-1	319494.80	1597668.94	2286.75	SCL-RPC
CP-2	319573.21	1597382.53	2283.49	SCL-RPC
CP-3	319689.79	1597042.10	2277.99	SCL-RPC

RPC = REBAR WITH RED PLASTIC CAP SET BY DJ&A

DATE SURVEYED: 10/22/2024
COORDINATE SYSTEM: NAD83 (2011) WASHINGTON STATE PLANE NORTH ZONE, NAVD88

ROAD CENTERLINE POINTS

CENTERLINE POINTS				
POINT #	NORTHING	EASTING	ELEVATION	DESCRIPTION
7000	319509.12	1597643.19		STA 10+98.53 PC
7001	319525.43	1597502.86	2285.00	STA 12+40
7002	319529.83	1597483.36	2284.83	STA 12+60
7003	319534.75	1597463.97	2284.66	STA 12+80
7004	319540.17	1597444.72	2284.49	STA 13+00
7005	319546.10	1597425.62	2284.32	STA 13+20
7006	319552.53	1597406.68	2284.16	STA 13+40
7007	319557.44	1597393.21	2284.03	STA 13+54.34 PT
7008	319559.32	1597388.20	2283.99	STA 13+59.69
7009	319597.11	1597287.56	2282.91	STA 14+67.19
7010	319601.62	1597275.57	2282.78	STA 14+80
7011	319608.65	1597256.85	2282.56	STA 15+00
7012	319610.01	1597253.23	2282.52	STA 15+03.86 PC
7013	319615.56	1597238.08	2282.34	STA 15+20
7014	319622.09	1597219.18	2282.12	STA 15+40
7015	319628.25	1597200.15	2281.90	STA 15+60
7016	319634.02	1597181.00	2281.69	STA 15+80
7017	319668.30	1597004.53		STA 17.60.01 PT

* CENTERLINE POINTS ARE AT PROFILE GRADE AT STATIONS SHOWN.

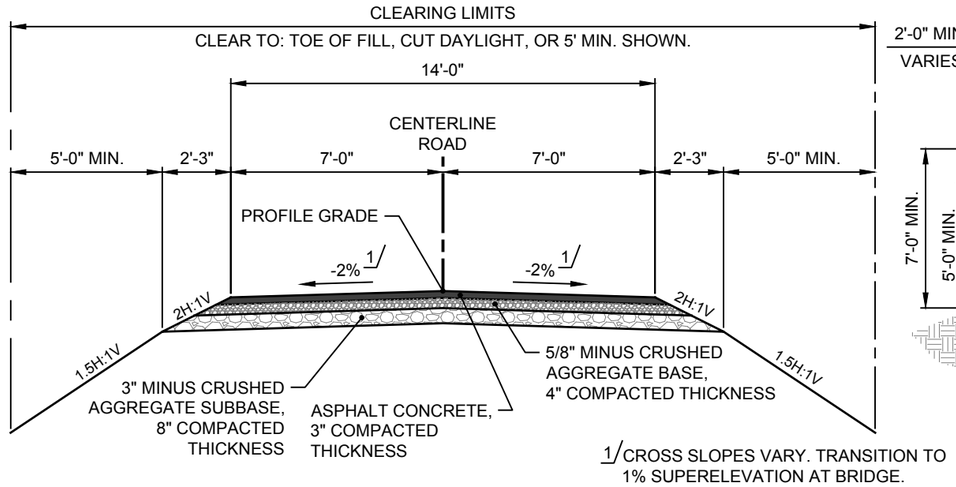

ROAD TYPICAL SECTION

NOT TO SCALE

ABUTMENT LAYOUT POINTS

POINT TABLE				
POINT #	NORTHING	EASTING	ELEVATION	DESCRIPTION
8000	319559.76	1597387.03	2276.91	ABUTMENT 1
8001	319596.67	1597288.73	2275.86	ABUTMENT 2

* LAYOUT POINTS ARE TO THE BOTTOM OF THE PILE CAP

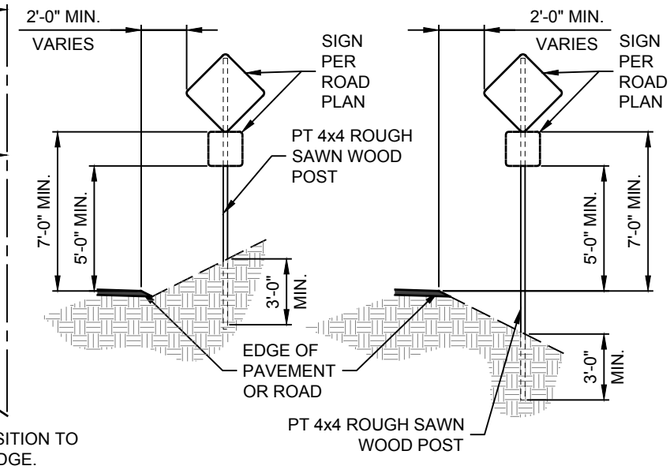

TYPICAL SIGN INSTALLATION

NOT TO SCALE

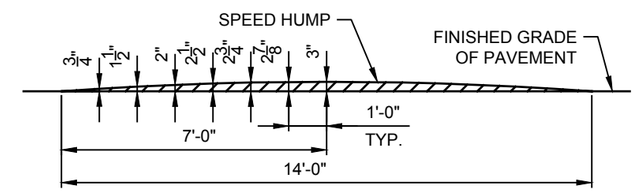

SPEED HUMP DETAIL

NOT TO SCALE

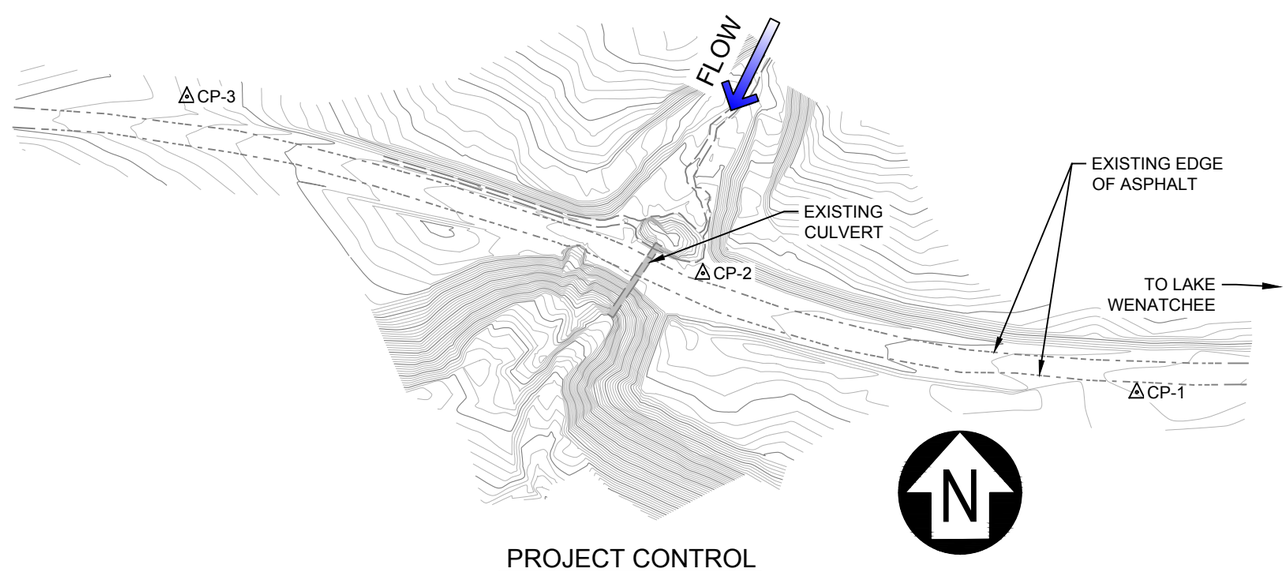

PROJECT CONTROL

SCALE: 1" = 100'

USDA FOREST SERVICE

United States Department of Agriculture
Forest Service

REGION 6
PACIFIC NORTHWEST REGION

PROJECT NAME

LODGEPOLE CREEK BRIDGE DESIGN

RD 6500000 MP 8.63

STRUCTURE NO. 061707000037203

OKANOGAN-WENATCHEE NATIONAL FOREST

WENATCHEE RIVER RANGER DISTRICT

DRAWING TITLE

PROJECT CONTROL & TYPICAL SECTIONS

DATE MAR-26	
ARCHIVE NO. R34905	
DESIGNER R. DAWE	DWG SHEET NO. 4
DRAWN R. DAWE	
CHECKED A. GROESBECK	SHEET 4 OF 30
PROJECT NO. 7333.30	

3/18/26 13:19 PATRICIA.DONNER C:\DJA-PW\WORK\DJA-PROD\DMS53764\7333.30 LODGEPOLE CREEK BRIDGE - DESIGN.DWG;

LEGEND

EXISTING FEATURES

- EXISTING EDGE OF ASPHALT
- EXISTING CULVERT
- EXISTING EDGE OF WATER
- 2290 MAJOR CONTOUR (5')
- MINOR CONTOUR (1')

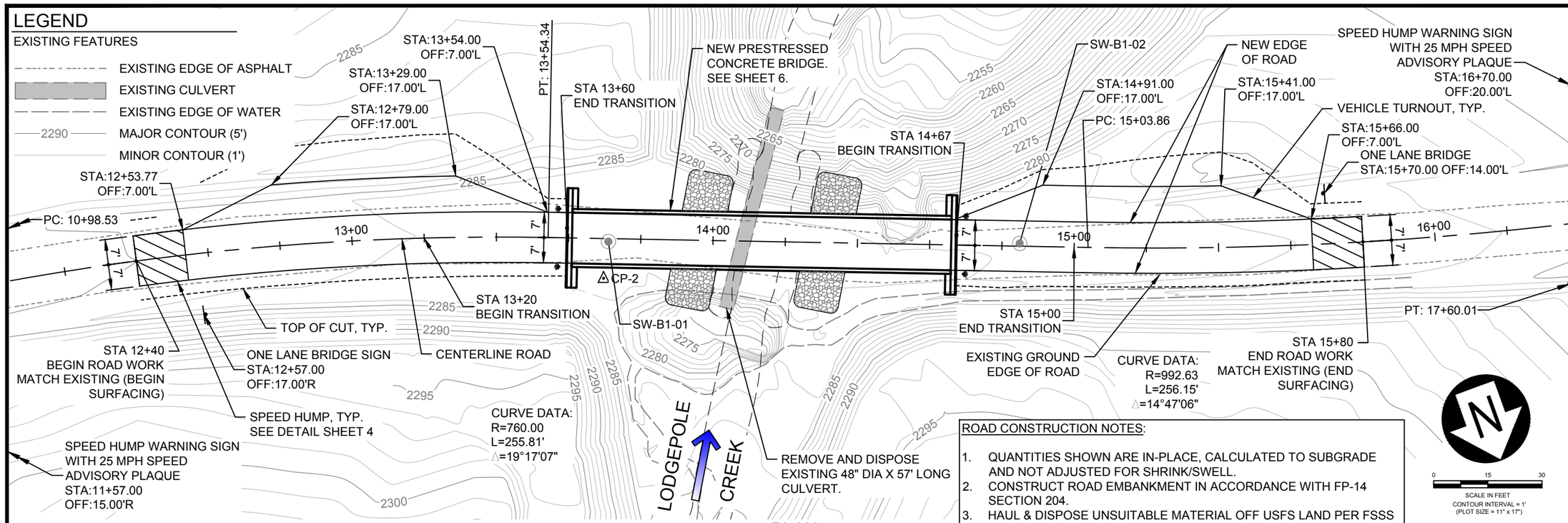

PLAN

ROAD CONSTRUCTION NOTES:

1. QUANTITIES SHOWN ARE IN-PLACE, CALCULATED TO SUBGRADE AND NOT ADJUSTED FOR SHRINK/SWELL.
2. CONSTRUCT ROAD EMBANKMENT IN ACCORDANCE WITH FP-14 SECTION 204.
3. HAUL & DISPOSE UNSUITABLE MATERIAL OFF USFS LAND PER FSSS SECTION 105. HAUL AND DISPOSAL IS INDIRECT TO ITEM NO. 20407.

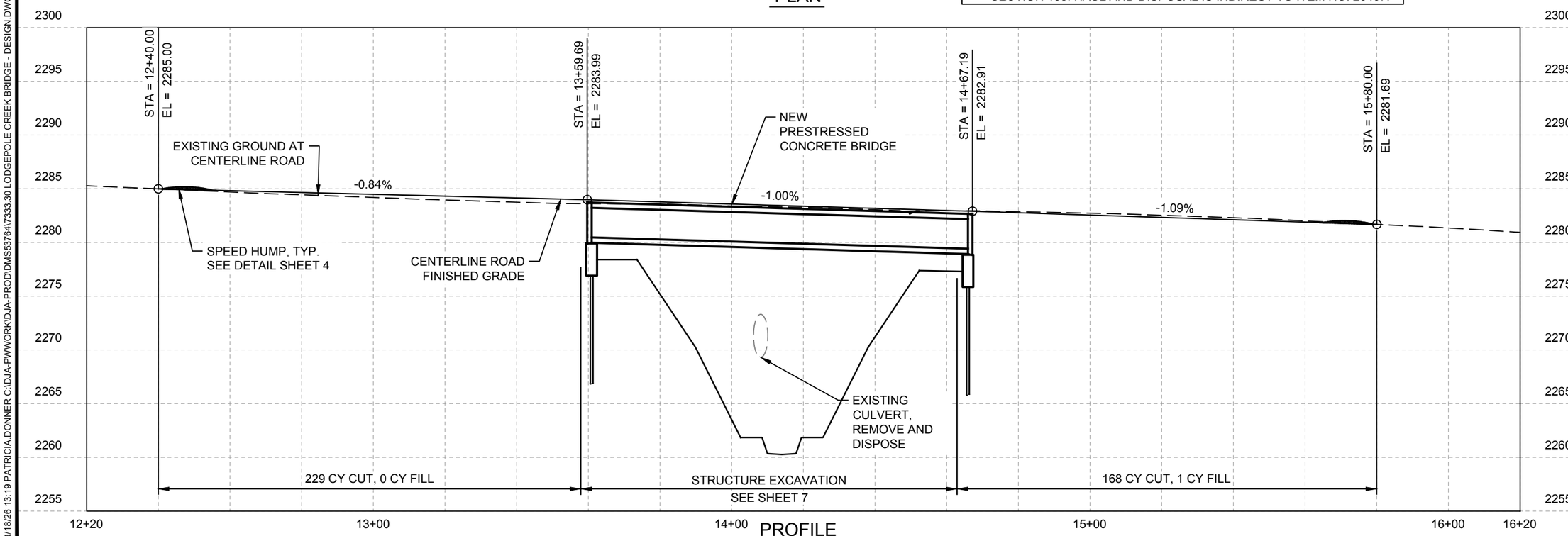

PROFILE

USDA FOREST SERVICE

United States Department of Agriculture
Forest Service

REGION 6
PACIFIC NORTHWEST REGION

PROJECT NAME

LODGEPOLE CREEK BRIDGE DESIGN

RD 6500000 MP 8.63

STRUCTURE NO.
061707000037203

OKANOGAN-WENATCHEE NATIONAL FOREST

WENATCHEE RIVER RANGER DISTRICT

DRAWING TITLE

ROAD PLAN & PROFILE

DATE MAR-26	
ARCHIVE NO. R34905	
DESIGNER R. DAWE	DWG SHEET NO. 5
DRAWN R. DAWE	
CHECKED A. GROESBECK	SHEET 5 OF 30
PROJECT NO. 7333.30	

3/18/26 13:19 PATRICIA.DONNER C:\DJA-PW\WORK\DJA-PROD\DMS5376\7333.30 LODGEPOLE CREEK BRIDGE - DESIGN.DWG;

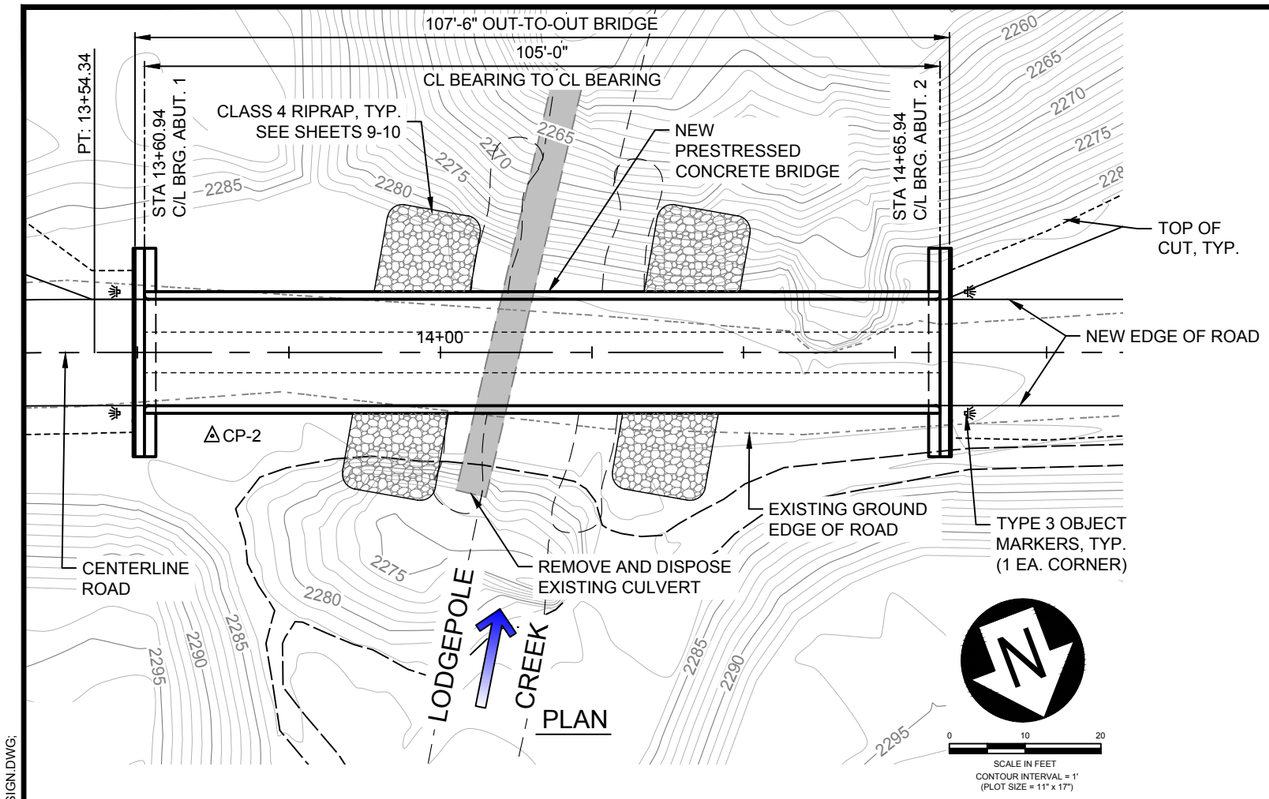

PLAN

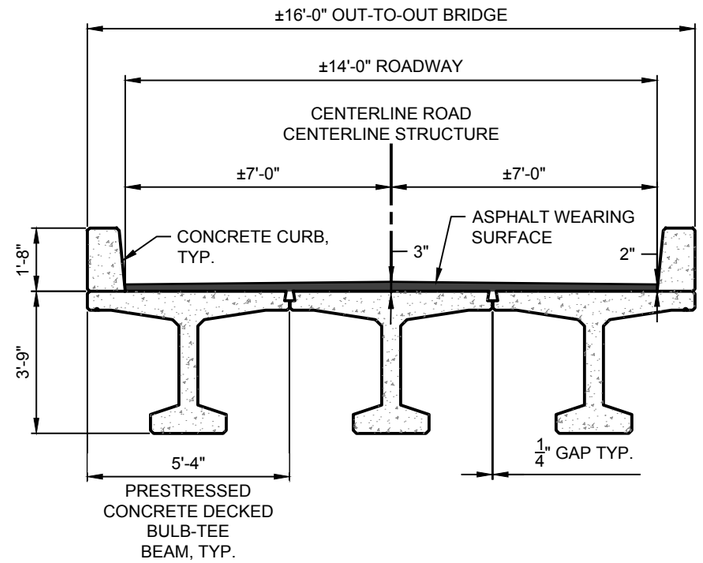

TYPICAL SECTION

SCALE: 1/4" = 1'-0"

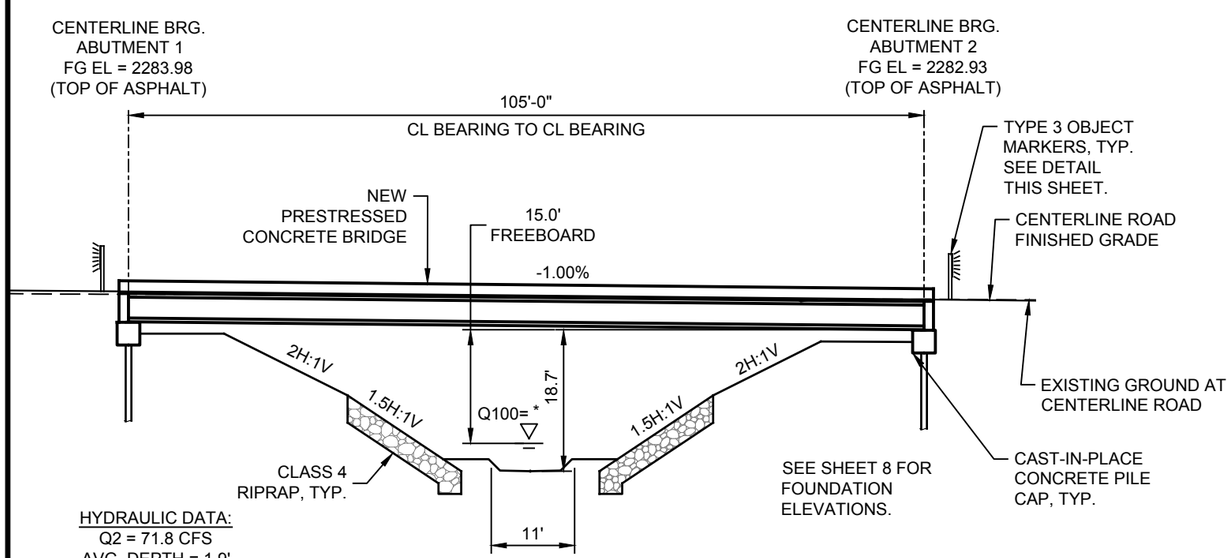

HYDRAULIC DATA:
Q2 = 71.8 CFS
AVG. DEPTH = 1.9'
BANKFULL WIDTH = 11'±

Q100 = 127.4 CFS
AVG. DEPTH = 2.3'

*Q100 = 2263.94' AT UPSTREAM
EDGE OF BRIDGE

ELEVATION

SCALE: 1" = 20'

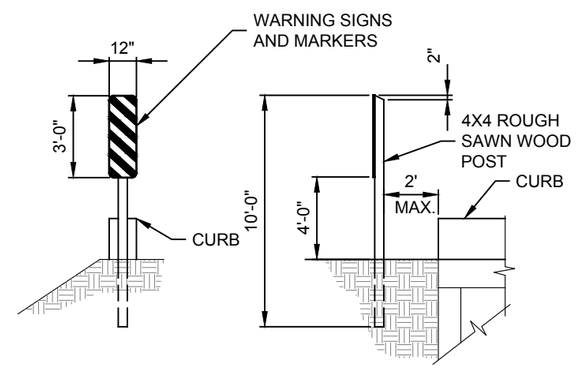

OBJECT MARKERS: USE 12"X 36" TYPE 3 OBJECT MARKERS COLORED YELLOW AND BLACK. USE MATERIAL MEETING MUTCD OM-3L OR OM-3R SPECIFICATIONS. FASTEN TO POST W/ (2) 1/4" Ø MACHINE BOLTS W/ WASHERS. FIELD DRILL BOLT HOLES. INSTALL POSTS SUCH THAT THE INSIDE EDGE OF THE REFLECTORIZED PANEL IS ON LINE WITH THE INSIDE EDGE OF THE CURB.

OBJECT MARKER TYPE 3

NOT TO SCALE

United States Department of Agriculture
Forest Service

REGION 6

PACIFIC NORTHWEST REGION

PROJECT NAME

LODGEPOLE CREEK BRIDGE DESIGN

RD 6500000 MP 8.63

STRUCTURE NO.
061707000037203

OKANOGAN-WENATCHEE NATIONAL FOREST

WENATCHEE RIVER RANGER DISTRICT

DRAWING TITLE

BRIDGE GENERAL LAYOUT

DATE MAR-26	
ARCHIVE NO. R34905	
DESIGNER R. DAWE	DWG SHEET NO. 6
DRAWN R. DAWE	
CHECKED A. GROESBECK	
PROJECT NO. 7333.30	SHEET 6 OF 30

3/18/26 13:19 PATRICIA.DONNER C:\DJA-PW\WORK\DJA-PROD\DMS53764\7333.30 LODGEPOLE CREEK BRIDGE - DESIGN.DWG;

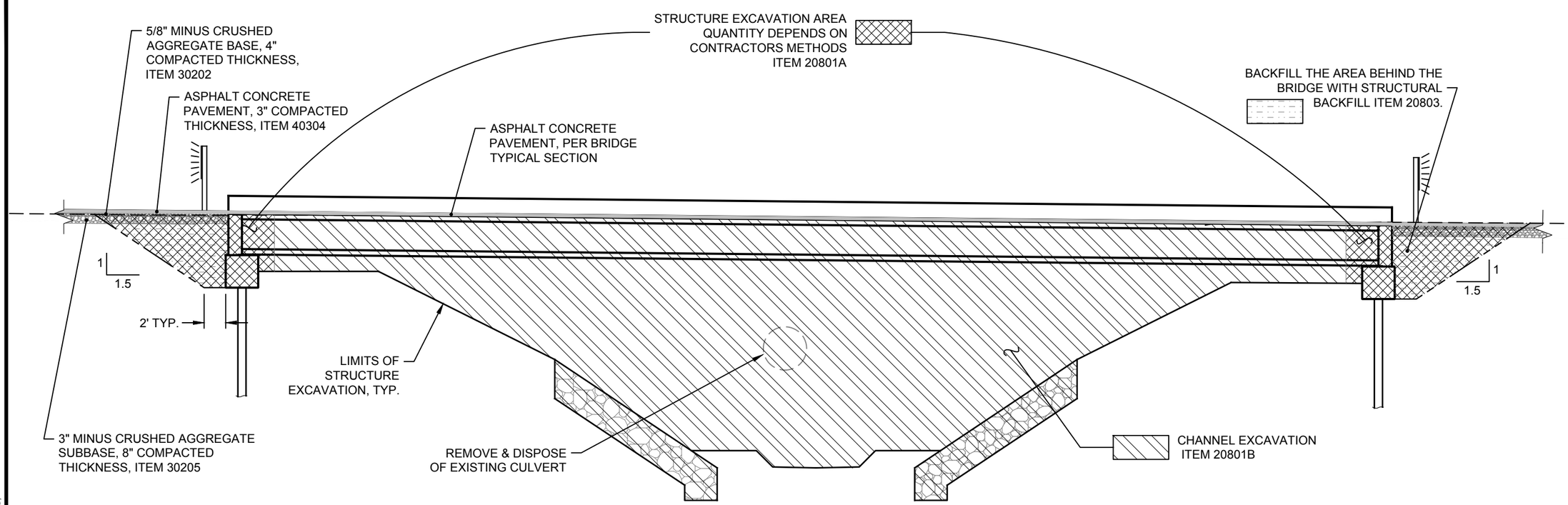

STRUCTURE EXCAVATION

NOT TO SCALE

DEWATERING AND SOIL EROSION CONTROL NOTES:

1. PROTECT AGAINST SOIL EROSION AND SEDIMENTATION DURING CONSTRUCTION IN ACCORDANCE WITH FP-14 SECTION 157 AND PROJECT PERMITS. PREPARE AND SUBMIT A SOIL EROSION AND SEDIMENT CONTROL PLAN TO THE CO FOR APPROVAL A MINIMUM OF THIRTY (30) DAYS PRIOR TO ANY GROUND DISTURBING ACTIVITIES.

2. DEWATER THE EXCAVATION IN ACCORDANCE WITH FP-14 SECTIONS 157 AND 208. REFER TO SHEET 28 FOR DEWATERING REQUIREMENTS.

3. DEWATERING IS THE SOLE RESPONSIBILITY OF THE CONTRACTOR. SHEET 28 ILLUSTRATES THE GENERAL DEWATERING REQUIREMENTS AND POSSIBLE METHODS AND EQUIPMENT AND IS NOT CONSIDERED ADEQUATE OR COMPLETE FOR THIS PROJECT. DEVELOP AND SUBMIT TO THE CO A PROJECT-SPECIFIC DEWATERING PLAN THIRTY (30) DAYS IN ADVANCE, INCLUDING DRAWINGS AND A WRITTEN OUTLINE ILLUSTRATING AND DESCRIBING PROPOSED LAYOUT, METHODS, AND EQUIPMENT. APPROVAL OF THE CONTRACTOR'S DEWATERING PLAN DOES NOT RELIEVE THE CONTRACTOR FROM COMPLETING THE WORK AS REQUIRED. IF THE CONTRACTOR'S METHODS ARE NOT PRODUCING ADEQUATE RESULTS, THE CONTRACTOR MUST RE-EVALUATE AND SUBMIT ANOTHER DEWATERING PLAN. RE-SUBMITTAL OF THE DEWATERING PLAN, IF REQUIRED, IS INDIRECT TO THE WORK.

4. ALL WORK ASSOCIATED WITH REROUTING SURFACE WATER IS PAID FOR UNDER 15713.

STRUCTURE EXCAVATION NOTES:

1. COMPLETE STRUCTURE EXCAVATION IN ACCORDANCE WITH FP-14 SECTION 208.

2. THE CONTRACTOR IS SOLELY RESPONSIBLE FOR EXCAVATION SUPPORT AND COMPLIANCE WITH ALL APPLICABLE OSHA REGULATIONS.

3. EXCAVATION LIMITS SHOWN ARE FOR DEMONSTRATION PURPOSES ONLY. THE CONTRACTOR IS RESPONSIBLE FOR MAKING ADJUSTMENTS TO THE CUT SLOPES AND EXCAVATION QUANTITIES BASED ON THE ACTUAL SOIL TYPES ENCOUNTERED. NOTIFY THE CO IMMEDIATELY IF BEDROCK OR SOFT, UNSUITABLE SOILS ARE FOUND.

4. SUBMIT AN EXCAVATION PLAN FOR APPROVAL THAT INCLUDES, AS A MINIMUM, THE FOLLOWING: DRAWINGS AND A WRITTEN OUTLINE ILLUSTRATING AND DESCRIBING THE PROPOSED EXCAVATION LIMITS, METHODS, EQUIPMENT TO BE USED, LOCATION OF STOCKPILES, AND ESTIMATED QUANTITIES. THE EXCAVATION PLAN MUST COMPLY WITH ALL APPLICABLE OSHA REQUIREMENTS AND LIST THE SOIL TYPE ASSUMED. CHANGES TO THE EXCAVATION LIMITS SHOWN HERE FOR THE CONTRACTOR'S DEWATERING METHODS OR CONTRACTOR CONVENIENCE MUST BE SHOWN ON THE PLAN AND ARE THE RESPONSIBILITY OF THE CONTRACTOR. THE EXCAVATION PLAN IS INDIRECT TO THE WORK.

STRUCTURE BACKFILL NOTES:

1. STRUCTURAL BACKFILL LIMITS SHOWN HERE ARE THE MINIMUM REQUIREMENTS. PLACE STRUCTURAL BACKFILL IN ACCORDANCE WITH FP-14 SECTION 208, AND AS SHOWN ON THESE PLANS, WITH MATERIAL MEETING THE REQUIREMENTS OF SUBSECTION 704.04. COMPACT MATERIAL IN ACCORDANCE WITH SUBSECTION 208.10. ANY MATERIAL OUTSIDE THE LIMITS SHOWN IS CONSIDERED EMBANKMENT AND THE MATERIAL MUST MEET THE REQUIREMENTS OF FP-14 SUBSECTION 704.06.

2. IT IS ASSUMED THAT MATERIAL CONSERVED FROM THE STRUCTURE EXCAVATION AT THIS SITE WILL MEET THE REQUIREMENT FOR EMBANKMENT (704.06). SOME MIXING AND SORTING MAY BE REQUIRED TO MEET THE MATERIAL SPECIFICATION. HAUL AND DISPOSE UNSUITABLE AND EXCESS MATERIAL IS INDIRECT TO OTHER ITEMS IN THE SCHEDULE OF ITEMS.

United States Department of Agriculture
Forest Service

REGION 6
PACIFIC NORTHWEST REGION

PROJECT NAME
LODGEPOLE CREEK BRIDGE DESIGN

RD 6500000 MP 8.63

STRUCTURE NO.
061707000037203

OKANOGAN-WENATCHEE NATIONAL FOREST

WENATCHEE RIVER RANGER DISTRICT

DRAWING TITLE
STRUCTURE EXCAVATION

DATE MAR-26	
ARCHIVE NO. R34905	
DESIGNER R. DAWE	DWG SHEET NO. 7
DRAWN R. DAWE	
CHECKED A. GROESBECK	SHEET 7 OF 30
PROJECT NO. 7333.30	

3/18/26 13:19 PATRICIA.DONNER C:\DJA-PW\WORK\DJA-PROD\DMS53764\7333.30 LODGEPOLE CREEK BRIDGE - DESIGN.DWG;

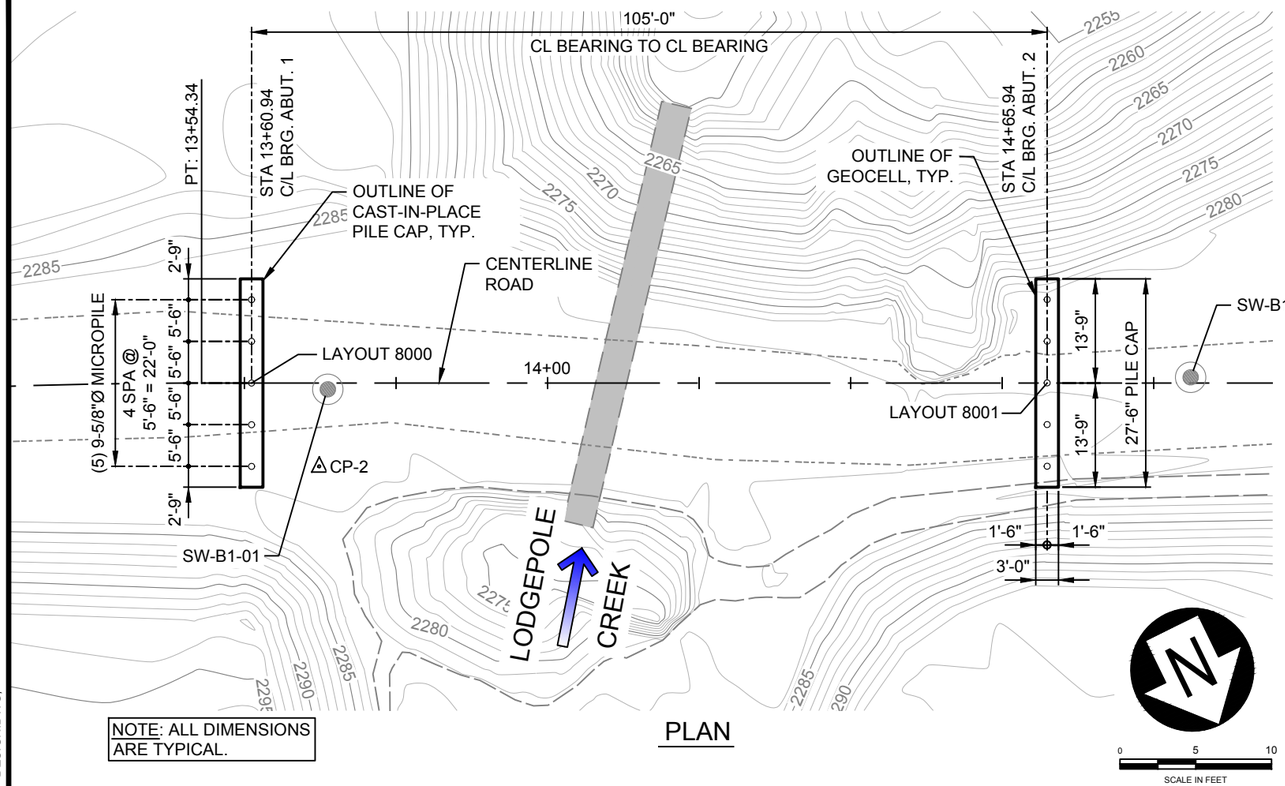

NOTE: ALL DIMENSIONS ARE TYPICAL.

PLAN

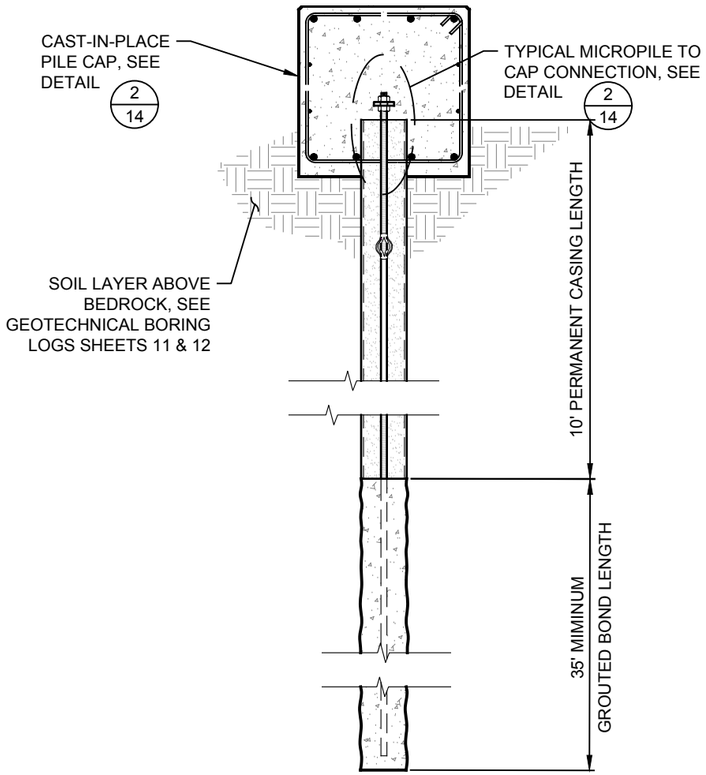

1 / 8 TYPICAL MICROPILE SECTION

NOT TO SCALE

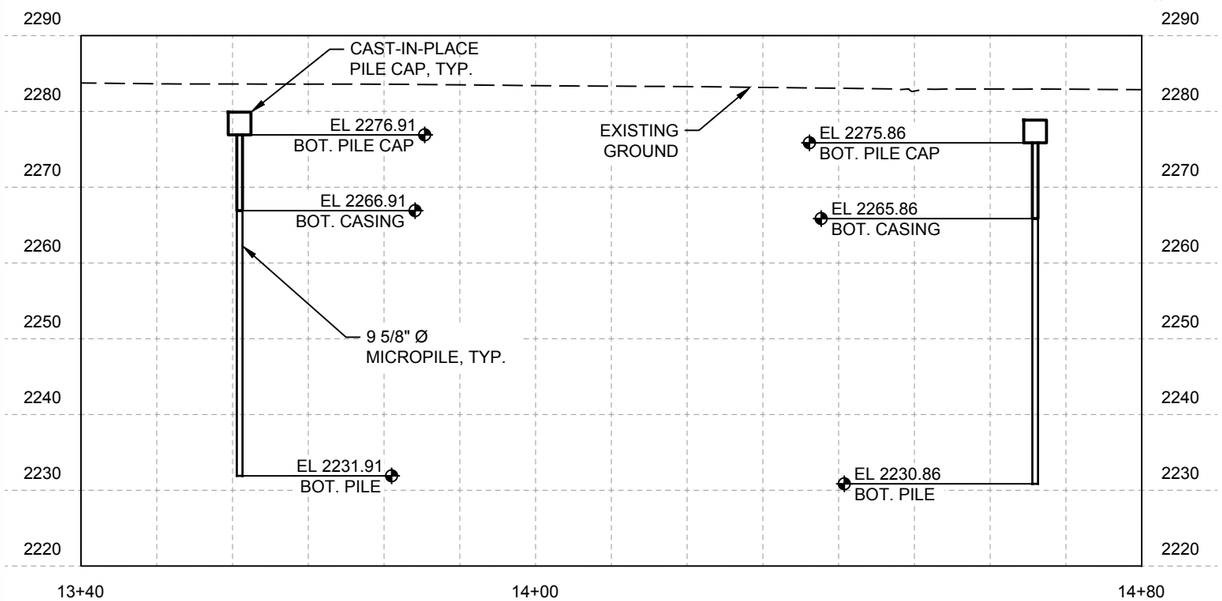

ELEVATION

SCALE: 1" = 20'

MICROPILE NOTES

1. REFER TO SHEETS 11-12 AND THE PROJECT GEOTECHNICAL REPORT FOR DETAILED SOIL BORING INFORMATION.
2. THE MINIMUM DIAMETER OF THE MICROPILE (ONCE CASING IS REMOVED) SHALL BE 9.625".
3. PERFORM ONE LOAD VERIFICATION TEST IN ACCORDANCE WITH FP-14 SUBSECTION 567.06(B)(1). LOCATION OF SACRIFICIAL PILE TO BE APPROVED BY THE CO.
4. PROOF LOAD ONE PILE PER ABUTMENT IN ACCORDANCE WITH FP-14 SUBSECTION 567.06(B)(2).
5. THE UNFACTORED DESIGN LOAD, DL, TO BE USED IN LOAD TESTING IS 81 KIPS.
6. THE CONTRACTOR IS REQUIRED TO RETAIN A PROFESSIONAL ENGINEER LICENSED IN THE STATE OF WASHINGTON TO MONITOR ALL PHASES OF THE MICROPILE INSTALLATION AND TESTING. SEE FP-14 SUBSECTION 567.03 FOR QUALIFICATION REQUIREMENTS, INDIRECT TO 56702.
7. CONTRACTOR CAN PROPOSE ALTERNATE FOUNDATION DESIGN USING DRILLED PIPE PILES TO BE CONSIDERED AND REVIEWED BY THE CO. THE ALTERNATE PILE FOUNDATION MUST BE DESIGNED BY A PROFESSIONAL ENGINEER LICENSED IN THE STATE OF WASHINGTON.

United States Department of Agriculture
Forest Service

REGION 6
PACIFIC NORTHWEST REGION

PROJECT NAME

LODGEPOLE CREEK BRIDGE DESIGN

RD 6500000 MP 8.63

STRUCTURE NO.
061707000037203

OKANOGAN-WENATCHEE NATIONAL FOREST

WENATCHEE RIVER RANGER DISTRICT

DRAWING TITLE

FOUNDATION PLAN

DATE MAR-26	
ARCHIVE NO. R34905	
DESIGNER R. DAWE	DWG SHEET NO. 8
DRAWN R. DAWE	
CHECKED A. GROESBECK	SHEET 8 OF 30
PROJECT NO. 7333.30	

3/18/26 13:19 PATRICIA.DONNER C:\DJA-PWWORK\DJA-PROD\DMS53764\7333.30 LODGEPOLE CREEK BRIDGE - DESIGN.DWG;

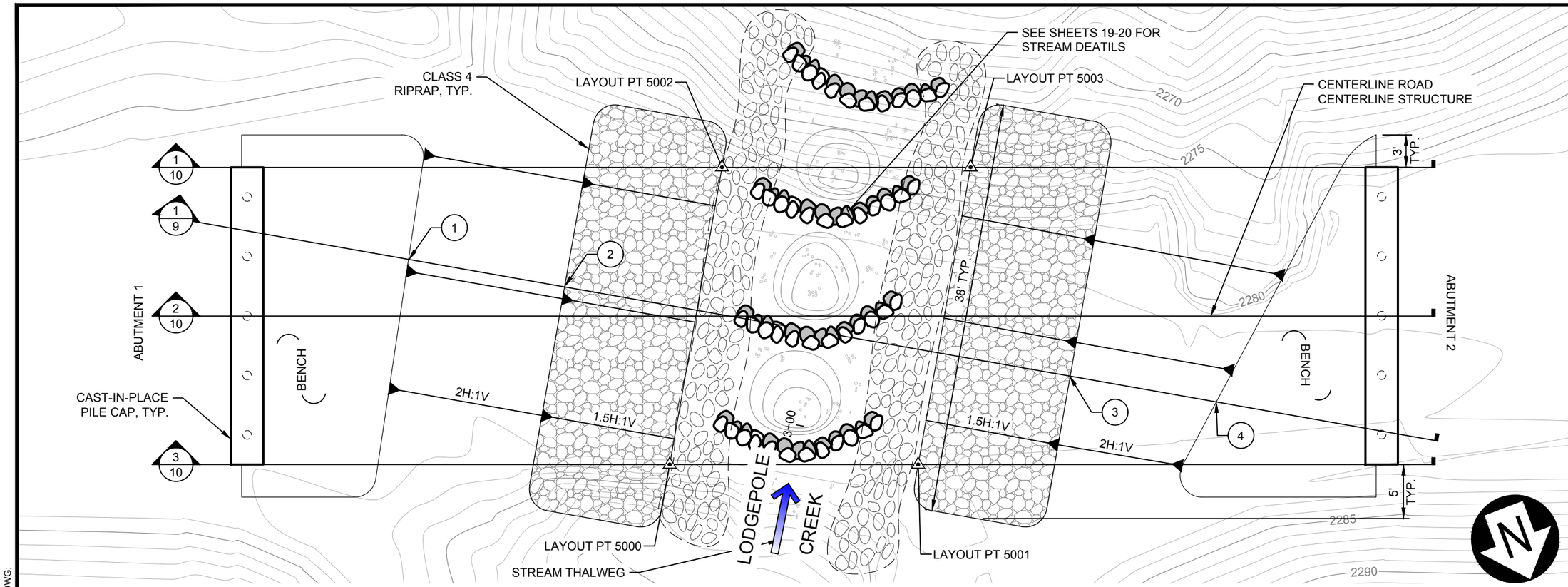

RIPRAP & STREAM PLAN

SCALE: 1" = 10'

SEE SHEET 10 FOR LAYOUT PTS.

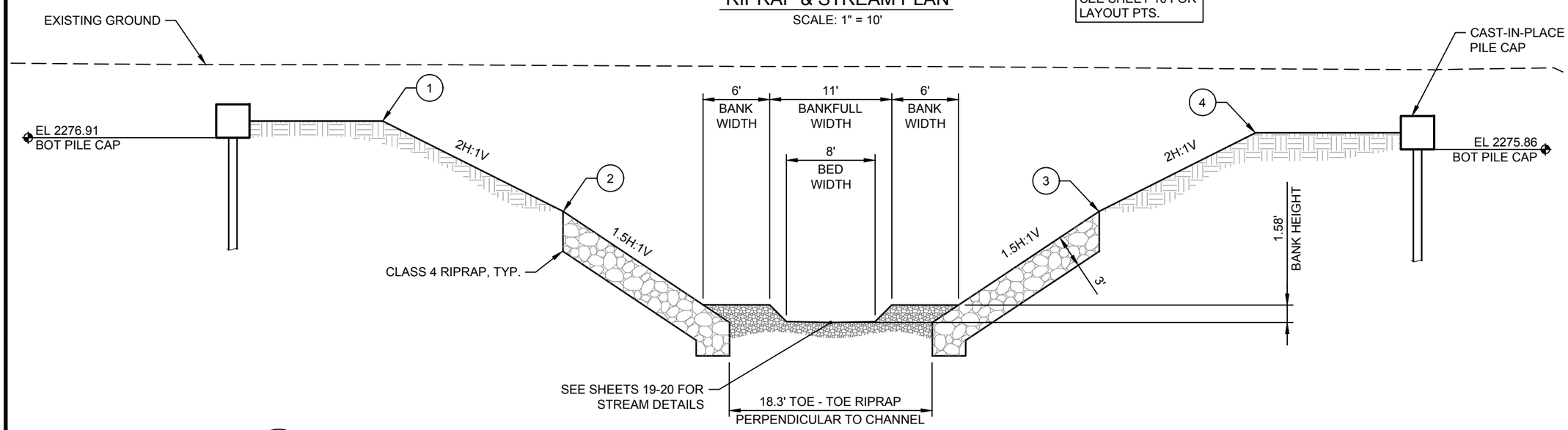

1/9 SECTION

SCALE: 1" = 10'

RIPRAP LAYOUT

USDA FOREST SERVICE

United States Department of Agriculture
Forest Service

REGION 6

PACIFIC NORTHWEST REGION

PROJECT NAME

LODGEPOLE CREEK BRIDGE DESIGN

RD 6500000 MP 8.63

STRUCTURE NO.
061707000037203

OKANOGAN-WENATCHEE NATIONAL FOREST

WENATCHEE RIVER RANGER DISTRICT

DRAWING TITLE

RIPRAP PLAN

DATE MAR-26	
ARCHIVE NO. R34905	
DESIGNER P. DONNER	DWG SHEET NO. 9
DRAWN P. DONNER	
CHECKED A. GROESBECK	SHEET 9 OF 30
PROJECT NO. 7333.30	

3/9/26 09:16 PATRICIA.DONNER C:\DJA-PW\WORK\DJA-PROD\DMS53764\7333.30 LODGEPOLE CREEK - RIPRAP.DWG;

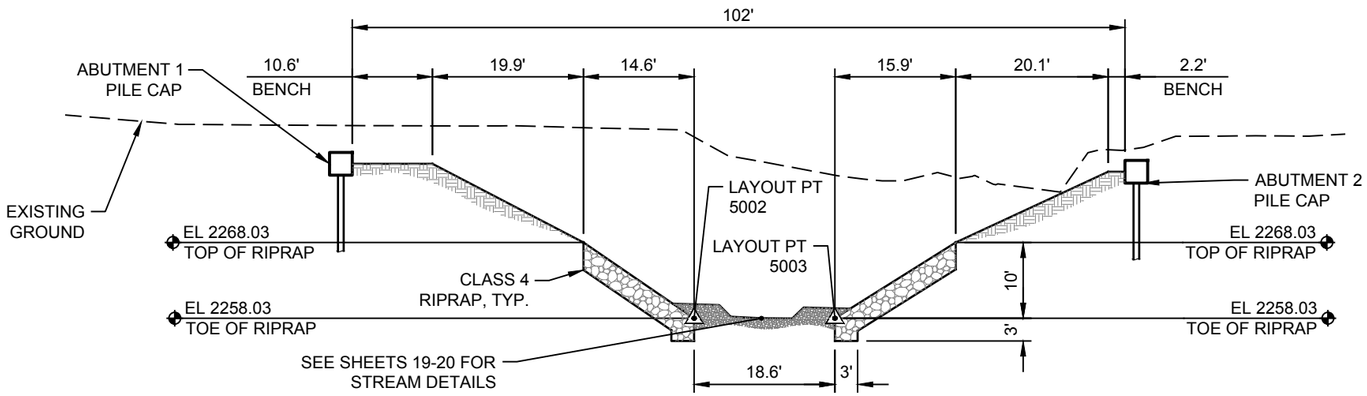

1/10 SECTION RIPRAP LAYOUT
SCALE: 1" = 20'

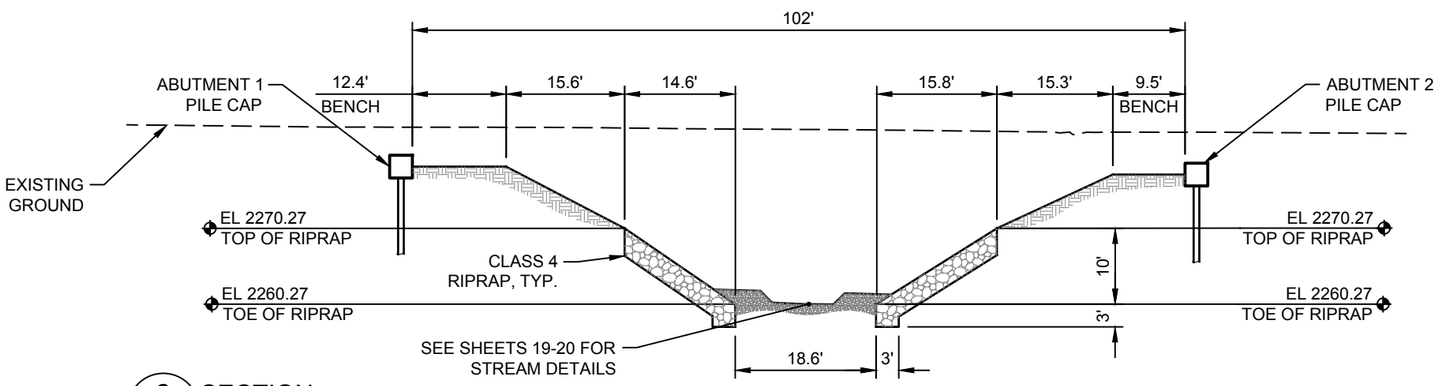

2/10 SECTION RIPRAP LAYOUT
SCALE: 1" = 20'

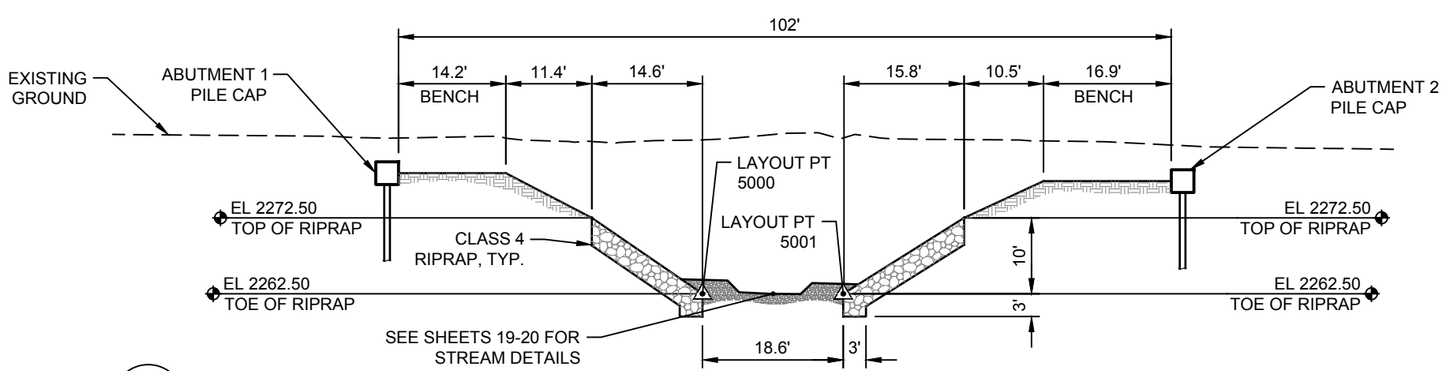

3/10 SECTION RIPRAP LAYOUT
SCALE: 1" = 20'

RIPRAP LAYOUT POINTS

POINT TABLE

POINT #	NORTHING	EASTING	ELEVATION	DESCRIPTION
5000	319586.38	1597355.24	2262.50	US LAYOUT PT
5001	319594.47	1597333.71	2262.50	US LAYOUT PT
5002	319562.34	1597341.03	2258.03	DS LAYOUT PT
5003	319570.43	1597319.50	2258.03	DS LAYOUT PT

* LAYOUT POINTS ARE TO THE TOE OF RIPRAP

United States Department of Agriculture
Forest Service

REGION 6
PACIFIC NORTHWEST REGION

PROJECT NAME
LODGEPOLE CREEK BRIDGE DESIGN

RD 6500000 MP 8.63

STRUCTURE NO.
061707000037203

OKANOGAN-WENATCHEE NATIONAL FOREST

WENATCHEE RIVER RANGER DISTRICT

DRAWING TITLE
RIPRAP PLAN

DATE
MAR-26

ARCHIVE NO.
R34905

DESIGNER
P. DONNER

DRAWN
P. DONNER

CHECKED
A. GROESBECK

PROJECT NO.
7333.30

DWG SHEET NO.
10

SHEET 10 OF 30

3/9/26 09:16 PATRICIA.DONNER C:\DJA-PW\WORK\DJA-PROD\DMS53764\7333.30 LODGEPOLE CREEK - RIPRAP.DWG;

SHANNON & WILSON

BORING LOG

USFS Lodgepole and Ninemile
Chelan County, Washington

SW-B1-01
Page 1 of 2

EXPLORATION INFORMATION	
Total Depth:	61.5 feet
Top Elevation:	~2284 feet
Vertical Datum:	NAVD88
Northing:	~319,562 feet
Easting:	~1,597,382 feet
Horizontal Datum:	WA-N SP [NAD 1983]
Station and Offset:	13+60,
Hole Finish Date:	June 11, 2025

DRILLING INFORMATION	
Drilling Method:	Sonic Core
Drilling Company:	Holt Services, Inc.
Drill Rig Equipment:	TSi 150 cc
Hole Size:	5 inch
Rod Type/Dia.:	NWJ 2.63 inch
Hammer Wt. / Drop:	140 lbs/30 inches
Hammer ETR:	n/a

BASIC LEGEND
(See separate LOG KEY for additional symbols, acronyms, and definitions)

Abbreviations
- N — Standard Penetration Test (SPT) blows per 6-inch increment
- PT — Penetration test (not SPT) blows per 6-inch increment
- bpf — Blows per foot for penetration test
- WC — Natural water content (%)
- FC — Fines content (% grains smaller than 0.075 mm)
- PI — Plasticity index (Atterberg Limits)

Symbols
- Sample Number / Sample Type: S-5 (SPT) — Gray bar indicates percent of sample length recovered.
- Water Level During Drilling

Approx. Elev. (feet)	Depth (feet)	Material Description and Other Observations	Graphic	Depth (feet)
		ASPHALT; 2 inches		0.2
		AGGREGATE BASE COURSE; 6 inches		0.5
2280	5	Medium dense to very dense, brown to red-brown, ***SILTY SAND WITH GRAVEL AND COBBLES*** (SM) to ***SILTY GRAVEL WITH SAND AND COBBLES*** (GM); moist; subrounded gravel. [A-1-b] Colluvium *-Granodiorite boulder from 2 to 5 feet.*		
2275	10			
2270	15			
2265	20			
2260	25			
2255	30			
2250	35			

Samples: No Observed Groundwater; R-1, R-2, R-3, R-4, R-5, R-6, R-7, R-8

Samples	Field Data	Lab Data
S-1 (SPT)	N = 17,39,50/5" (89/11" bpf)	WC=4%
S-2 (SPT)	N = 10,30,28 (58 bpf)	Point Load=Average Appx. Compressive Strength (psi): 28,500/33,500 (Perpendicular)/ (Parallel) WC=8%
S-3 (SPT)	N = 19,21,29 (50 bpf)	WC=6% FC=15% pH=8.2 RES=6800 OhmCm
S-4 (SPT)	N = 10,19,10 (29 bpf)	WC=5%
S-5 (GB)		
S-6 (SPT)	N = 12,20,18 (38 bpf)	WC=8%
S-7 (SPT)	N = 15,22,24 (46 bpf)	WC=7% FC=13%
S-8 (SPT)	N = 22,29,25 (54 bpf)	WC=6%

Multiple Items Plotted *(see bottom legend on Page 1)*

NOTES:
- Refer to LOG KEY for explanation of symbols, codes, abbreviations, and definitions.
- Groundwater level, if indicated above, is for the date specified and may vary.
- Group symbol is based on visual-manual identification and selected lab testing.
- Report text contains limitations and information needed to contextually understand this log.

▲ Uncorrected N-value, bpf
▼ Uncorrected, Penetration N-value, bpf
● = WC% ◇ = FC%
Plastic Limit — Liquid Limit

FINAL

Logged by:	BWV
Review by:	WJZ
Version:	1

Job#: 113461-001 | Template Ver:1 | File: 113461_LODGEPOLE & NINEMILE.GPJ | Rpt: BORING LOG | Library: SW GINT LIBRARY.GLB | Date: 8/20/25

SHANNON & WILSON

BORING LOG

USFS Lodgepole and Ninemile
Chelan County, Washington

SW-B1-01
Page 2 of 2

See Page 1 for Hole Information and Notes

Approx. Elev. (feet)	Depth (feet)	Material Description and Other Observations	Graphic	Depth (feet)
2245	40	Medium dense to very dense, brown to red-brown, ***SILTY SAND WITH GRAVEL AND COBBLES*** (SM) to ***SILTY GRAVEL WITH SAND AND COBBLES*** (GM); moist; subrounded gravel. [A-1-b] Colluvium *(starts on previous page) -Trace to few cobbles below 40 feet*		
2240	45			
2235	50	Red-brown, ***SILTY SAND*** (SM); moist; fine grained; iron oxide staining. Outwash		46.5
2230	55	Dense to very dense, red-brown to gray-brown, ***SILTY SAND WITH GRAVEL*** (SM); moist; trace to few cobbles; iron oxide staining. Till		48.0
2225	60			
	61.5	BOTTOM OF HOLE AT 61.5 FEET		61.5

Samples: R-8, R-9, R-10, R-11

Samples	Field Data	Lab Data
S-9 (SPT)	N = 26,20,26 (46 bpf)	WC=9%
S-10 (GB)		FC=39% LL/PI=NP/NP
S-11 (SPT)	N = 44,35,30 (65 bpf)	WC=8% FC=14%
S-12 (SPT)	N = 20,18,23 (41 bpf)	

Multiple Items Plotted *(see bottom legend on Page 1)*

Job#: 113461-001 | Template Ver:1 | File: 113461_LODGEPOLE & NINEMILE.GPJ | Rpt: BORING LOG | Library: SW GINT LIBRARY.GLB | Date: 8/20/25

United States Department of Agriculture
Forest Service

REGION 6
PACIFIC NORTHWEST REGION

PROJECT NAME
LODGEPOLE CREEK BRIDGE DESIGN

RD 6500000 MP 8.63

STRUCTURE NO.
061707000037203

OKANOGAN-WENATCHEE NATIONAL FOREST

WENATCHEE RIVER RANGER DISTRICT

DRAWING TITLE
BORING LOGS

DATE
MAR-26

ARCHIVE NO.
R34905

DESIGNER
P. DONNER

DRAWN
P. DONNER

CHECKED
A. GROESBECK

PROJECT NO.
7333.30

DWG SHEET NO.
11

SHEET 11 OF 30

3/10/26 17:03 PATRICIA.DONNER C:\DJA-PW\WORK\DJA-PROD\DMS53764\7333.30 LODGEPOLE CREEK - BORING LOGS.DWG;

SHANNON & WILSON

BORING LOG

USFS Lodgepole and Ninemile
Chelan County, Washington

SW-B1-02
Page 1 of 2

EXPLORATION INFORMATION	
Total Depth:	71.5 feet
Top Elevation:	~2283 feet
Vertical Datum:	NAVD88
Northing:	~319,600 feet
Easting:	~1,597,275 feet
Horizontal Datum:	WA-N SP [NAD 1983]
Station and Offset:	14+70,
Hole Finish Date:	June 10, 2025

DRILLING INFORMATION	
Drilling Method:	Sonic Core
Drilling Company:	Holt Services, Inc.
Drill Rig Equipment:	TSi 150 cc
Hole Size:	5 inch
Rod Type/Dia.:	NWJ 2.63 inch
Hammer Wt. / Drop:	140 lbs/30 inches
Hammer ETR:	n/a

BASIC LEGEND
(See separate LOG KEY for additional symbols, acronyms, and definitions)

Abbreviations
- N Standard Penetration Test (SPT) blows per 6-inch increment
- PT Penetration test (not SPT) blows per 6-inch increment
- bpf Blows per foot for penetration test
- WC Natural water content (%)
- FC Fines content (% grains smaller than 0.075 mm)
- PI Plasticity index (Atterberg Limits)

Symbols
- Sample Number / Sample Type: S-5 (SPT) — Gray bar indicates percent of sample length recovered.
- Water Level During Drilling

Approx. Elev. (feet)	Depth (feet)	Material Description and Other Observations	Graphic	Depth (feet)
2280	0	***ASPHALT;*** 2 inches		0.2
		AGGREGATE BASE COURSE; 6 inches		0.7
	5	Medium dense to dense, brown to red-brown, ***SILTY SAND WITH GRAVEL AND COBBLES*** (SM); moist; subangular to subrounded gravel. [A-1-b] Colluvium		
2275	10			
2270	15	Very dense, brown, ***POORLY GRADED GRAVEL WITH SILT AND SAND AND COBBLES*** (GP-GM); moist; subangular gravel. Colluvium		14.0
2265		Medium dense to dense, brown to red-brown, ***SILTY SAND WITH GRAVEL AND COBBLES*** (SM); moist to wet; subangular to subrounded gravel. Colluvium		17.0
2260	20			
2255	25			
2250	30	*-Few cobbles below 30 feet.*		
	35			

Water seated off past 30 feet

Samples	Field Data	Lab Data
S-1 (SPT)	N = 10,11,9 (20 bpf)	WC=14% FC=25%
S-2 (AB)		
S-3 (SPT)	N = 17,20,17 (37 bpf)	WC=5%
S-4 (SPT)	N = 17,24,23 (47 bpf)	WC=6%
S-5 (SPT)	N = 12,47,50/4" (97/10" bpf)	Point Load=Average Appx. Compressive Strength (psi): 15,200/10,000 (Perpendicular/Parallel) WC=3% FC=11%
S-6 (SPT)	N = 15,15,33 (48 bpf)	WC=5%
S-7 (GB)		
S-8 (SPT)	N = 18,17,18 (35 bpf)	WC=10%
S-9 (SPT)	N = 7,14,23 (37 bpf)	WC=7%
S-10	N = 15,19,27	WC=8%

Multiple Items Plotted *(see bottom legend on Page 1)*

NOTES:
- Refer to LOG KEY for explanation of symbols, codes, abbreviations, and definitions.
- Groundwater level, if indicated above, is for the date specified and may vary.
- Group symbol is based on visual-manual identification and selected lab testing.
- Report text contains limitations and information needed to contextually understand this log.

▲ Uncorrected N-value, bpf
▼ Uncorrected, Penetration N-value, bpf
● = WC% ◇ = FC%

FINAL	
Logged by:	BWV
Review by:	WJZ
Version:	1

SHANNON & WILSON

BORING LOG

USFS Lodgepole and Ninemile
Chelan County, Washington

SW-B1-02
Page 2 of 2

See Page 1 for Hole Information and Notes

Approx. Elev. (feet)	Depth (feet)	Material Description and Other Observations	Graphic	Depth (feet)
2245	40	Very dense, brown to red-brown, ***POORLY GRADED SAND WITH CLAY AND GRAVEL AND COBBLES*** (SP-SC); wet; subangular gravel. Colluvium		37.0
2240	45	Medium dense, brown to red-brown, ***SILTY SAND*** (SM); moist; trace subrounded gravel; 1 inch thick interbedded lean clay layer; iron oxide staining. Outwash		45.8
2235	50	Very dense, red-brown, ***POORLY GRADED SAND WITH SILT AND GRAVEL*** (SP-SM); moist to wet; trace rounded to subrounded cobbles; rounded to subrounded gravel; iron oxide staining. Till		47.0
2230	55			
2225	60			
2220	65	Very dense, gray-brown, ***CLAYEY SAND WITH GRAVEL*** (SC); moist; few subangular to subrounded cobbles; iron oxide staining. Till		64.0
2215	70			
	71.5	BOTTOM OF HOLE AT 71.5 FEET		71.5

Samples	Field Data	Lab Data
(SPT)	(46 bpf)	
S-11 (SPT)	N = 12,15,44 (59 bpf)	WC=12% FC=12%
S-12 (SPT)	N = 20,10,15 (25 bpf)	WC=7%
S-13 (SPT)	N = 22,40,50/5" (90/11" bpf)	
S-14 (SPT)	N = 17,33,50/5" (83/11" bpf)	WC=6% FC=11%
S-15 (SPT)	N = 24,32,37 (69 bpf)	WC=7%
S-16 (SPT)	N = 12,23,40 (63 bpf)	WC=8%

Multiple Items Plotted *(see bottom legend on Page 1)*

United States Department of Agriculture
Forest Service

REGION 6
PACIFIC NORTHWEST REGION

PROJECT NAME
LODGEPOLE CREEK BRIDGE DESIGN

RD 6500000 MP 8.63

STRUCTURE NO.
061707000037203

OKANOGAN-WENATCHEE NATIONAL FOREST

WENATCHEE RIVER RANGER DISTRICT

DRAWING TITLE
BORING LOGS

DATE
MAR-26

ARCHIVE NO.
R34905

DESIGNER
P. DONNER

DRAWN
P. DONNER

CHECKED
A. GROESBECK

PROJECT NO.
7333.30

DWG SHEET NO.
12

SHEET 12 OF 30

3/10/26 17:03 PATRICIA.DONNER C:\DJA-PWWORK\DJA-PROD\DMS53764\7333.30 LODGEPOLE CREEK - BORING LOGS.DWG;
Job#: 113461-001 | Template Ver:1 | File: 113461_LODGEPOLE & NINEMILE.GPJ | Rpt: BORING LOG | Library: SW GINT LIBRARY.GLB | Date: 8/20/25

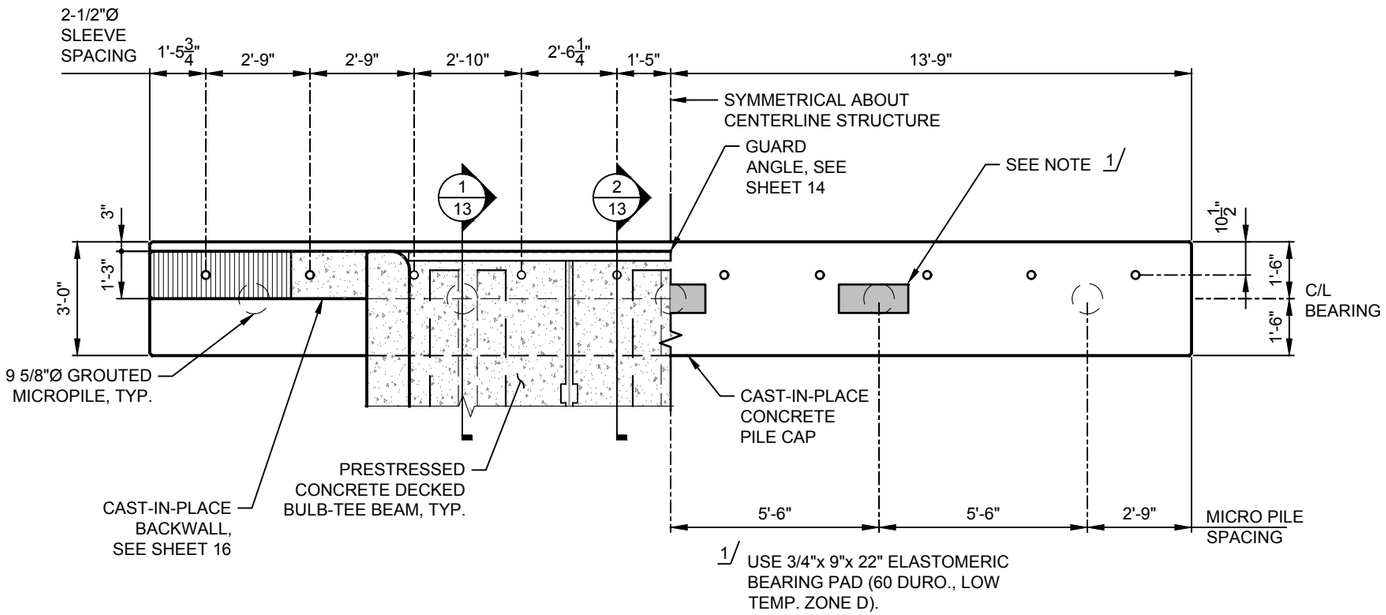

ABUTMENT PLAN

ABUT. 1 SHOWN
ABUT. 2 SIMILAR

SCALE: 1/4" = 1'-0"

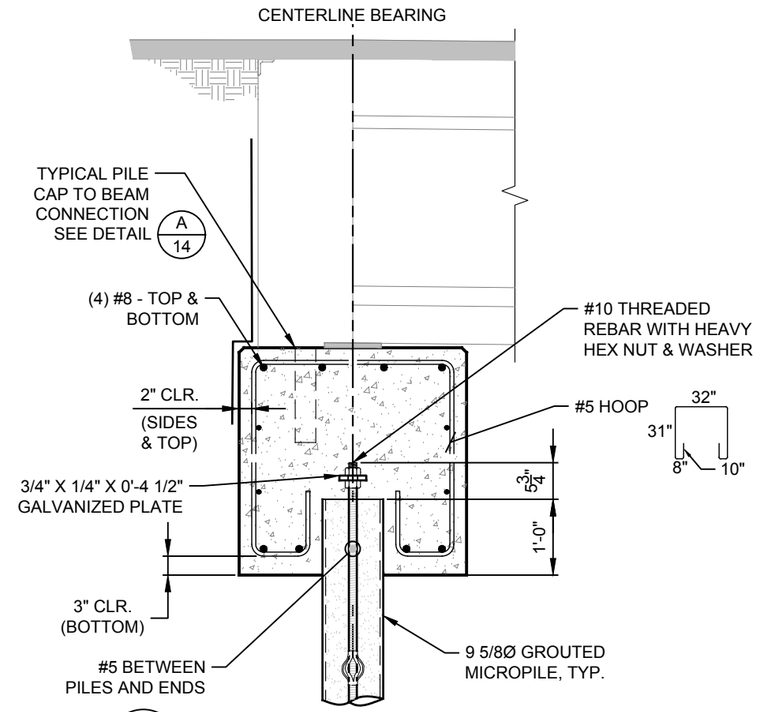

1/13 SECTION — PILE TO CAP CONNECTION

SCALE: 1/2" = 1'-0"

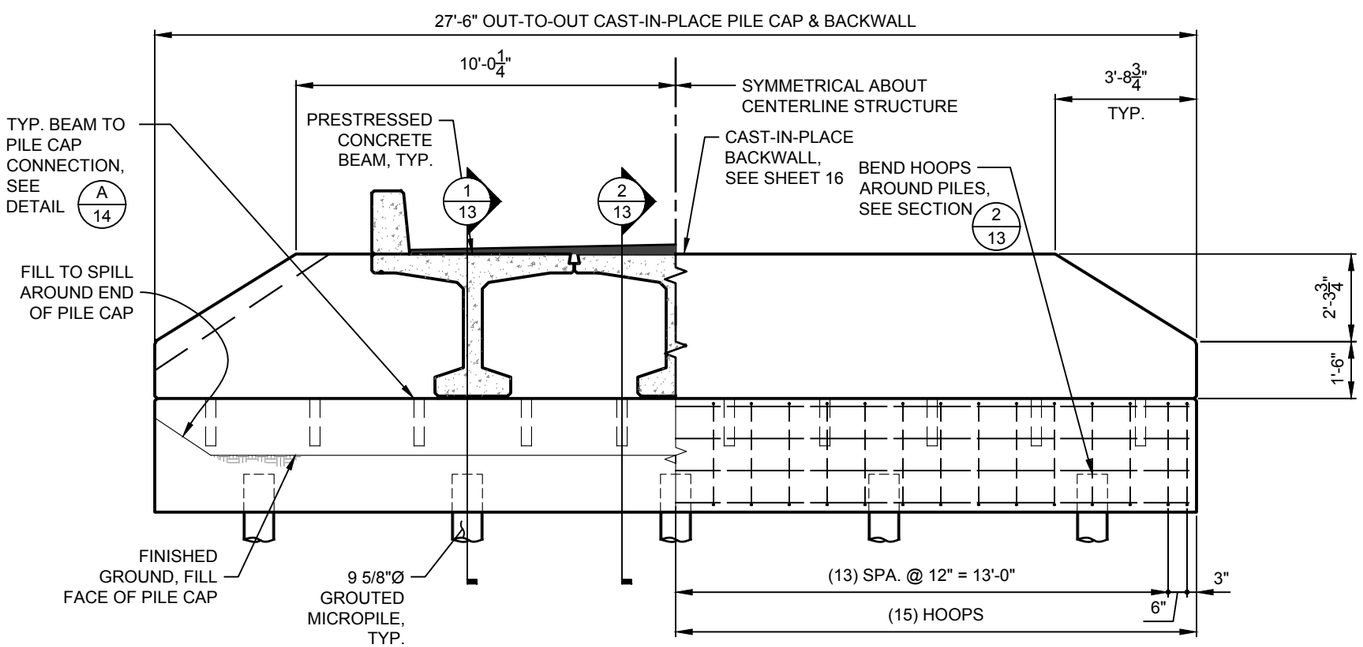

ABUTMENT ELEVATION

SCALE: 1/4" = 1'-0"

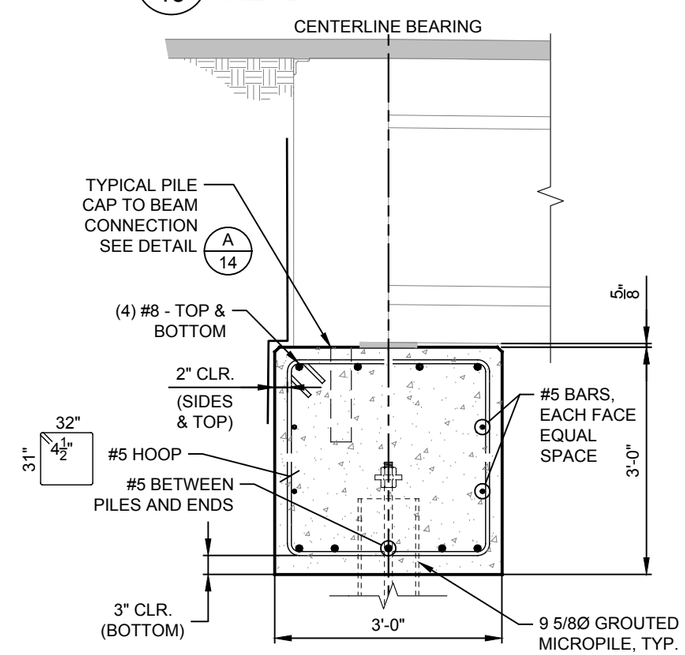

1/13 SECTION — ABUTMENT 1 SHOWN, ABUTMENT 2 SIMILAR

SCALE: 1/2" = 1'-0"

USDA FOREST SERVICE

United States Department of Agriculture
Forest Service

REGION 6
PACIFIC NORTHWEST REGION

PROJECT NAME

LODGEPOLE CREEK BRIDGE DESIGN

RD 6500000 MP 8.63

STRUCTURE NO. 061707000037203

OKANOGAN-WENATCHEE NATIONAL FOREST

WENATCHEE RIVER RANGER DISTRICT

DRAWING TITLE

ABUTMENT PLAN & ELEVATION

DATE MAR-26	
ARCHIVE NO. R34905	
DESIGNER P. DONNER	DWG SHEET NO. 13
DRAWN P. DONNER	
CHECKED A. GROESBECK	SHEET 13 OF 30
PROJECT NO. 7333.30	

3/18/26 13:20 PATRICIA.DONNER C:\DJA-PWWORK\DJA-PROD\DMS53764\7333.30 LODGEPOLE CREEK BRIDGE - DETAILS.DWG;

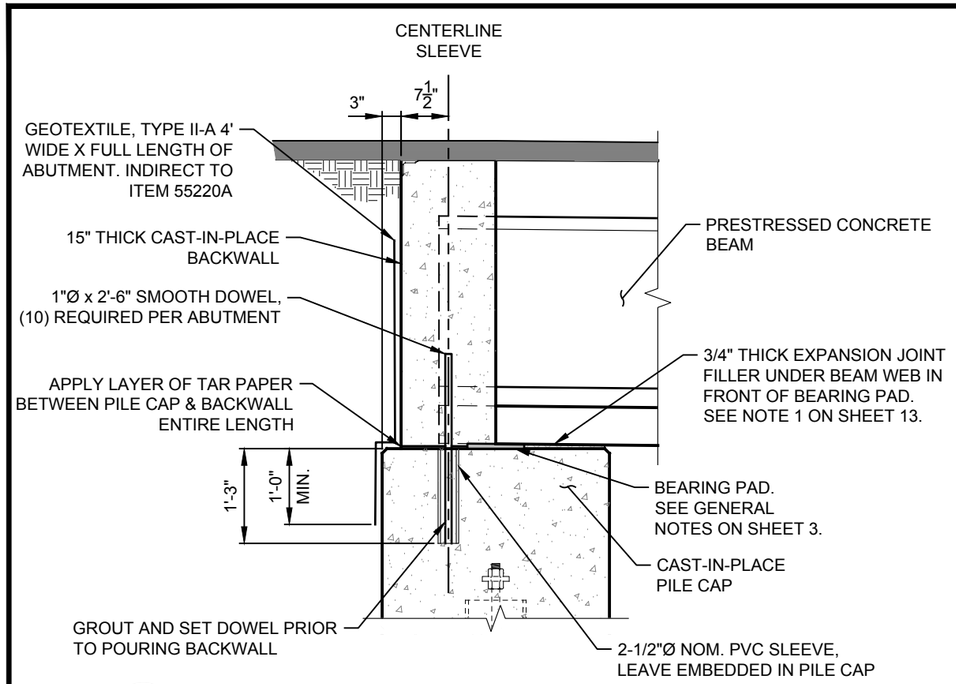

A 14 DETAIL PILE CAP TO BEAM CONNECTION
SCALE: 1/2" = 1'-0"

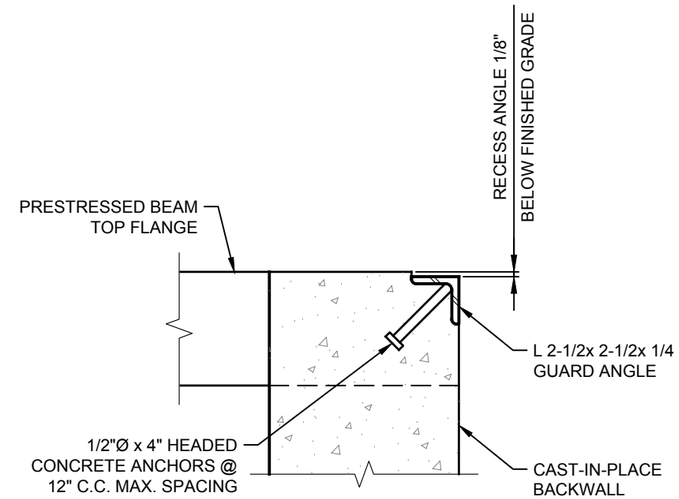

B 14 DETAIL GUARD ANGLE DETAIL
SCALE: 1" = 1'-0"

United States Department of Agriculture
Forest Service

REGION 6
PACIFIC NORTHWEST REGION

PROJECT NAME
LODGEPOLE CREEK BRIDGE DESIGN

RD 6500000 MP 8.63

STRUCTURE NO.
061707000037203

OKANOGAN-WENATCHEE NATIONAL FOREST

WENATCHEE RIVER RANGER DISTRICT

DRAWING TITLE
ABUTMENT DETAILS

DATE
MAR-26

ARCHIVE NO.
R34905

DESIGNER
P. DONNER

DRAWN
P. DONNER

CHECKED
A. GROESBECK

PROJECT NO.
7333.30

DWG SHEET NO.
14

SHEET 14 OF 30

3/18/26 13:20 PATRICIA.DONNER C:\DJA-PWWORK\DJA-PROD\DMS53764\7333.30 LODGEPOLE CREEK BRIDGE - DETAILS.DWG;

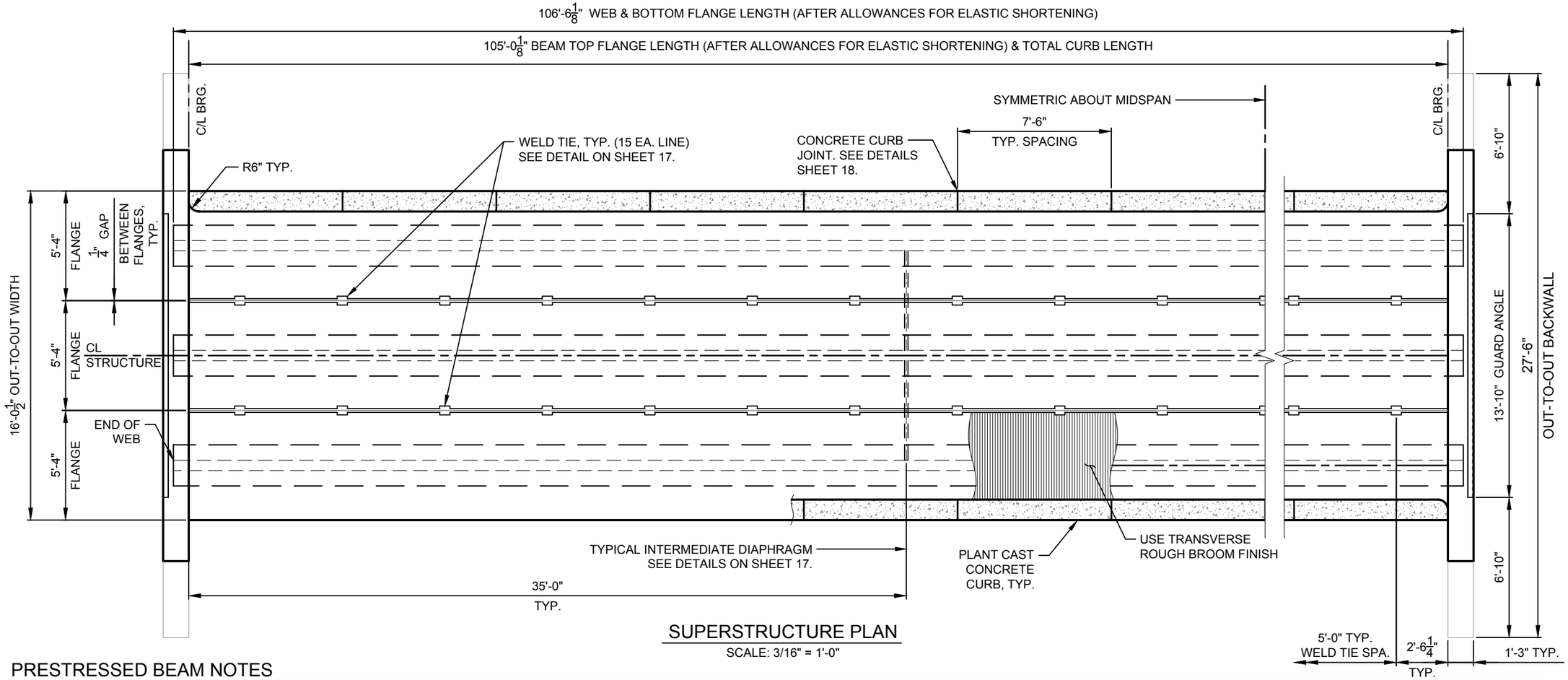

SUPERSTRUCTURE PLAN

SCALE: 3/16" = 1'-0"

PRESTRESSED BEAM NOTES

PRETENSIONING IS THE ONLY ACCEPTABLE METHOD OF PRESTRESSING FOR THIS PROJECT. PROVIDE THE FINAL DESIGN AND LOAD RATING FOR ALL PRESTRESSED REINFORCEMENT AND NON-PRESTRESSED REINFORCEMENT IN THE SECTION SHOWN ON THIS SHEET. VERIFY THAT THE ALLOWABLE STRESS AND ULTIMATE STRENGTH REQUIREMENTS ARE MET AT ALL STAGES OF CONSTRUCTION. ASSUME MODERATE CORROSIVE CONDITIONS FOR TENSILE STRESS LIMITS AT SERVICE LIMIT STATE AFTER LOSSES. THE DESIGN DOCUMENTS MUST BEAR THE SEAL OF A PROFESSIONAL ENGINEER LICENSED IN WASHINGTON. SUBMIT CALCULATIONS AND SHOP DRAWINGS IN ACCORDANCE WITH SECTION 553 OF THE STANDARD SPECIFICATIONS AT LEAST 30 DAYS PRIOR TO CASTING ANY MEMBERS. SEE GENERAL NOTES ON SHEET 3 FOR ADDITIONAL DESIGN AND MATERIAL SPECIFICATIONS.

DESIGN IN ACCORDANCE WITH THE AASHTO LRFD BRIDGE DESIGN SPECIFICATIONS, 9TH EDITION. DESIGN NOTES ARE AS FOLLOWS:

1. HL-93 LIVE LOAD WITH IMPACT.
2. ENSURE THE LRFR LOAD RATING FACTOR EXCEEDS 1.0 FOR HL-93 INVENTORY LOADING. USE A SYSTEM FACTOR OF 0.85. LOAD RATE STRUCTURE IN ACCORDANCE WITH THE "MANUAL FOR BRIDGE EVALUATION", CURRENT EDITION WITH THE INTERIMS, USING LRFR METHODOLOGY (CH 6A) AND THE GUIDELINES FOR BRIDGE LOAD RATINGS BY THE USFS REGION 6.
3. SUPERIMPOSED DEAD LOAD IS 35 PSF FOR A FUTURE WEARING SURFACE. SUPERIMPOSED DEAD LOAD MAY BE ASSUMED TO BE EQUALLY DISTRIBUTED TO THE BEAMS.
4. ASSUME MODERATE CORROSIVE CONDITIONS FOR TENSILE STRESS LIMITS AT SERVICE LIMIT STATE AFTER LOSSES.
5. EITHER APPROXIMATE OR REFINED METHODS FOR ESTIMATING PRESTRESS LOSSES MAY BE USED.
6. ENSURE THE MAXIMUM TENSION STRESS IN THE PRE-COMPRESSED TENSILE ZONE AFTER LOSSES FOR ALL SERVICE CASES IS $0.19\sqrt{F'C}$. MAXIMUM TEMPORARY TENSILE STRESS (AT RELEASE) IS 0.20 KSI.

FINISHING CONCRETE: FINISH THE BOTTOMS OF ALL BEAMS AND THE EXTERIOR FACE OF ALL EXTERIOR BEAMS IN ACCORDANCE WITH THE SPECIFICATIONS EXCEPT A CONCRETE GRAY EPOXY MORTAR USING AASHTO M235 CLASS II EPOXY RESIN ADHESIVE MAY BE USED INSTEAD OF THE SPECIFIED SAND-CEMENT MORTAR TO REDUCE CURING TIME. RUB THE EPOXY MORTAR WITH CEMENT PRIOR TO HARDENING. FINISH THE BEAM ENDS SO THAT ALL HOLES OR ACCEPTABLE ROCK POCKETS ARE PATCHED AND THE STRANDS ARE CUT OFF FLUSH OR BURNED BACK.

PAINTING OF WELD TIE CONNECTIONS AND GUARD ANGLES: GALVANIZE OR PAINT GUARD ANGLES OR WELD TIES NOT COVERED BY 1 INCH OR MORE OF CONCRETE. IF PAINTING, USE ONE PRIMER COAT AND TWO FIELD COATS OF ALUMINUM PAINT CONFORMING TO AASHTO M69, TYPE II.

ALTERNATE BEAM SECTIONS: CONTRACTOR MAY PROPOSE ALTERNATE PRESTRESSED CONCRETE BEAM SECTIONS PROVIDING THE OVERALL BEAM DEPTH IS WITHIN 3" OF THAT SHOWN IN THESE PLANS. ASSOCIATED MODIFICATIONS TO THE DESIGN BECOME THE RESPONSIBILITY OF THE CONTRACTOR. ALTERNATE DESIGN, SECTIONS, AND CONNECTIONS MUST ALSO BE SUBMITTED FOR USFS REVIEW AT LEAST 30 DAYS PRIOR TO CASTING.

CURB RAIL DESIGN: CURBS ARE DESIGNED FOR TEST LEVEL 1 (TL-1) 13.5 KIP STATIC LOAD (AASHTO LRFD-9, TABLE A13.2-1). CURB DOES NOT MEET AASHTO LRFD GEOMETRIC REQUIREMENTS AND HAS NOT BEEN CRASH-TESTED. RAILING MEETS USFS OWNER GEOMETRIC REQUIREMENTS PER FSH 7709.56B CHAPTER 70 AND CAN BE CONSIDERED TO BE CRASH-WORTHY. PROVIDE A CLASS 2 RUBBED FINISH ON CURBS ON ALL FACES.

United States Department of Agriculture
Forest Service

REGION 6
PACIFIC NORTHWEST REGION

PROJECT NAME
LODGEPOLE CREEK BRIDGE DESIGN

RD 6500000 MP 8.63

STRUCTURE NO.
061707000037203

OKANOGAN-WENATCHEE NATIONAL FOREST

WENATCHEE RIVER RANGER DISTRICT

DRAWING TITLE
SUPERSTRUCTURE PLAN

DATE MAR-26	
ARCHIVE NO. R34905	
DESIGNER P. DONNER	DWG SHEET NO. 15
DRAWN P. DONNER	
CHECKED A. GROESBECK	SHEET 15 OF 30
PROJECT NO. 7333.30	

3/18/26 13:20 PATRICIA.DONNER C:\DJA-PWWORK\DJA-PROD\DMS53764\7333.30 LODGEPOLE CREEK BRIDGE - DETAILS.DWG;

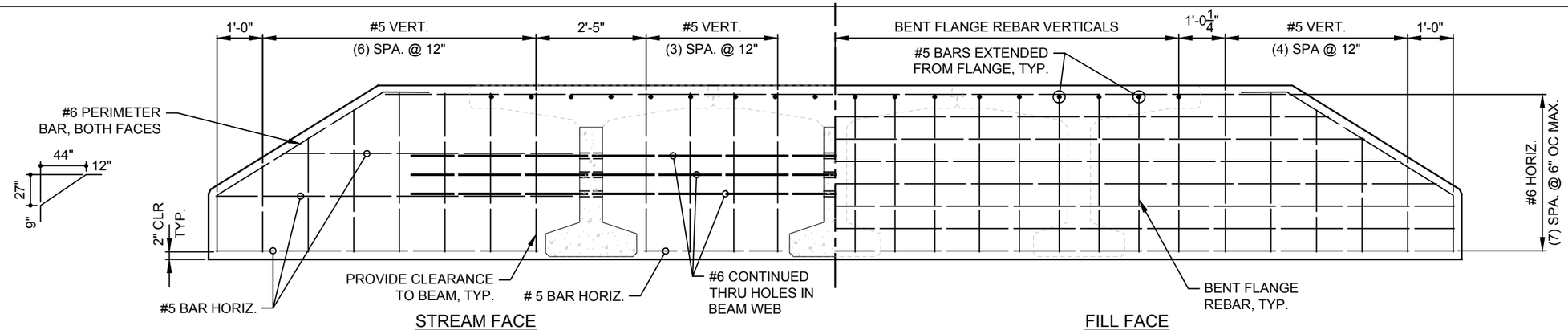

BACKWALL REINFORCING

SCALE: 3/8" = 1'-0"

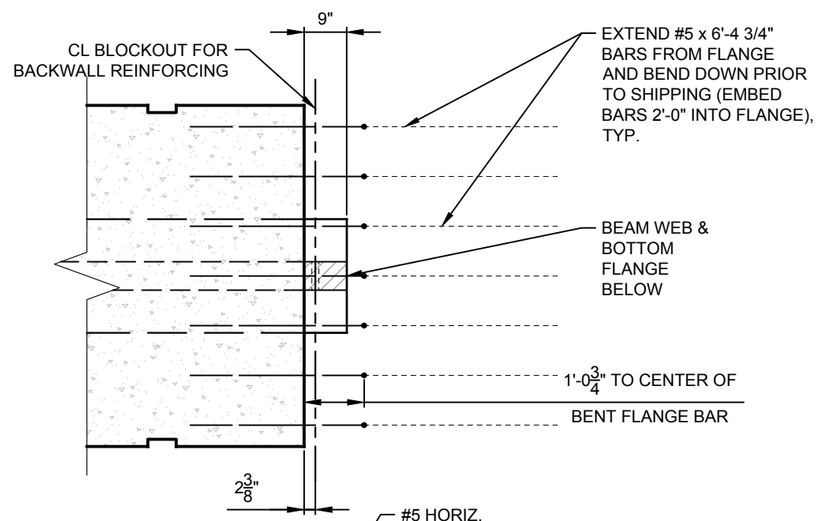

PLAN

FOOTNOTES

1/ PROVIDE REINFORCING IN THE ANCHORAGE ZONE FOR SPLITTING RESISTANCE AND CONFINEMENT IN ACCORDANCE WITH AASHTO LRFD 5.9.4.4.1 AND 5.9.4.4.2, RESPECTIVELY. USE MIN. CONFINEMENT REINFORCEMENT OF #3 BARS @ 6".

2/ BLOCKOUT HOLES MAY BE FORMED WITH POST-TENSIONING DUCT LEFT IN PLACE. OTHER MATERIALS USED TO FORM HOLES MUST BE REMOVED PRIOR TO SHIPPING.

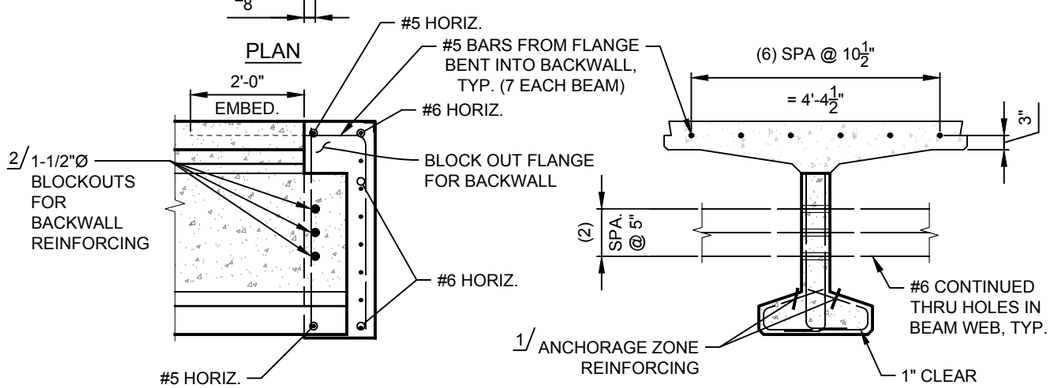

ELEVATION

SECTION

A 16 DETAIL TYPICAL BEAM END DETAIL

SCALE: 3/8" = 1'-0"

3/18/26 13:20 PATRICIA.DONNER C:\DJA-PWWORK\DJA-PROD\DMS53764\7333.30 LODGEPOLE CREEK BRIDGE - DETAILS.DWG;

United States Department of Agriculture
Forest Service

REGION 6
PACIFIC NORTHWEST REGION

PROJECT NAME

LODGEPOLE CREEK BRIDGE DESIGN

RD 6500000 MP 8.63

STRUCTURE NO. 061707000037203

OKANOGAN-WENATCHEE NATIONAL FOREST

WENATCHEE RIVER RANGER DISTRICT

DRAWING TITLE

SUPERSTRUCTURE DETAILS

DATE MAR-26	
ARCHIVE NO. R34905	
DESIGNER P. DONNER	DWG SHEET NO. 16
DRAWN P. DONNER	
CHECKED A. GROESBECK	SHEET 16 OF 30
PROJECT NO. 7333.30	

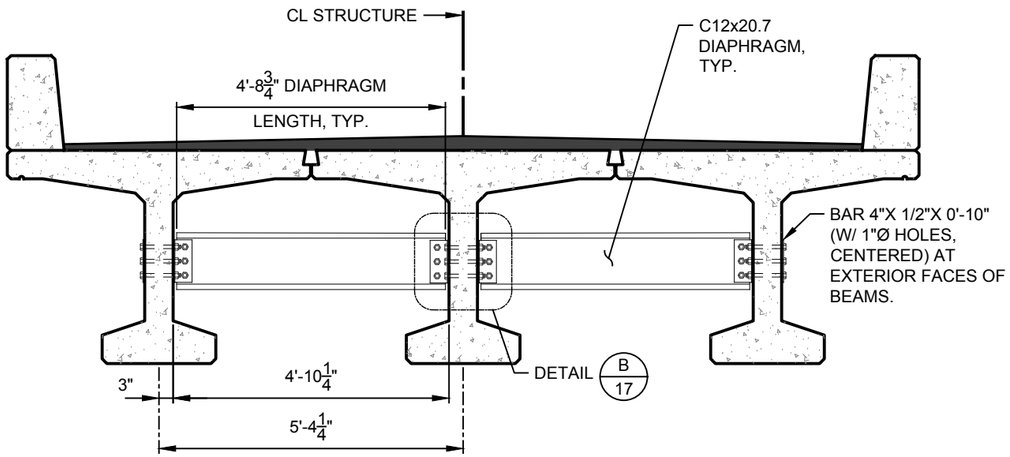

INTERMEDIATE DIAPHRAGM DETAIL

SCALE: 3/8" = 1'-0"

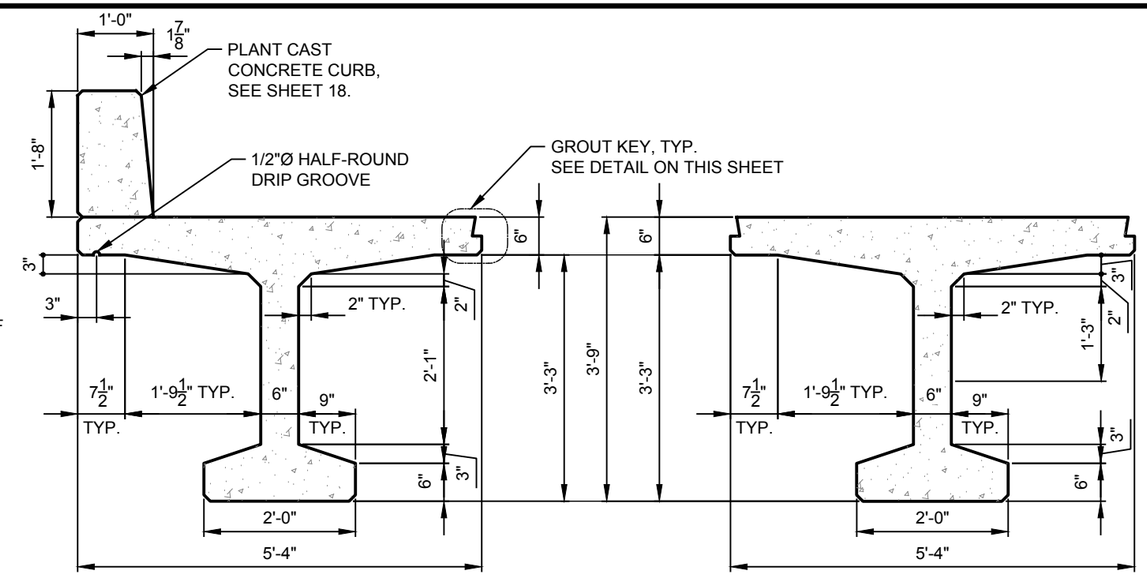

EXTERIOR BEAM

SCALE: 1/2" = 1'-0"

INTERIOR BEAM

SCALE: 1/2" = 1'-0"

NOTE: GALVANIZE OR PAINT STEEL DIAPHRAGM ELEMENTS. USE ONE PRIMER COAT AND TWO TOP COATS OF ALUMINUM PAINT CONFORMING TO AASHTO M69, TYPE II.

NOTE: REINFORCING SHOWN IS IN ADDITION TO TYPICAL BEAM REINFORCING

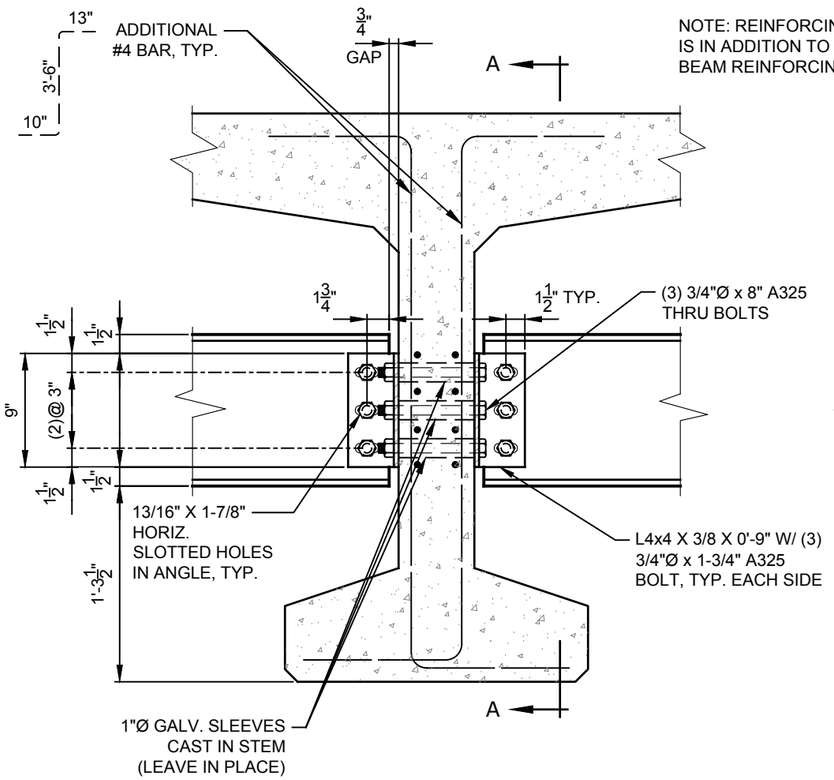

B/17 DETAIL DIAPHRAGM CONNECTION

SCALE: 1" = 1'-0"

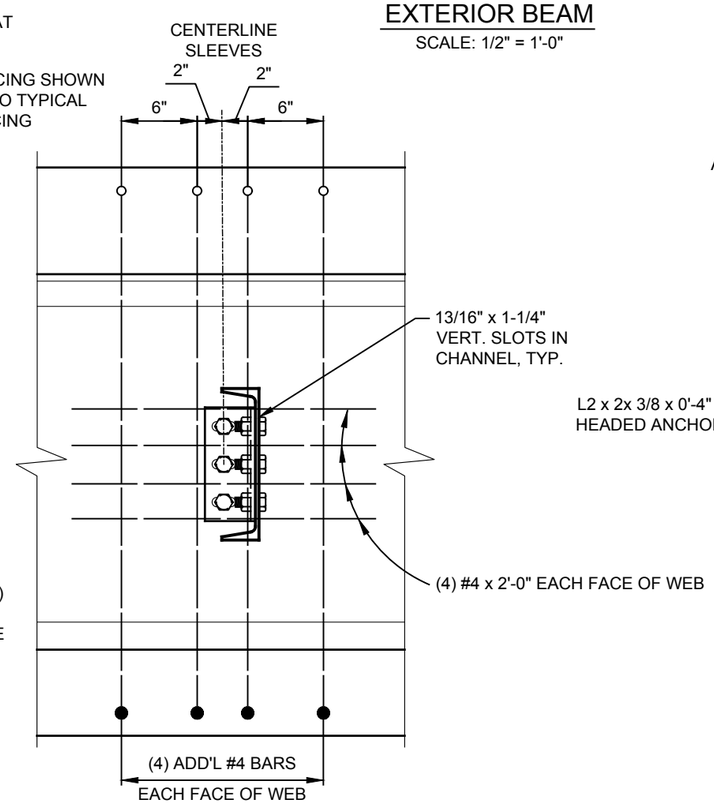

SECTION A-A

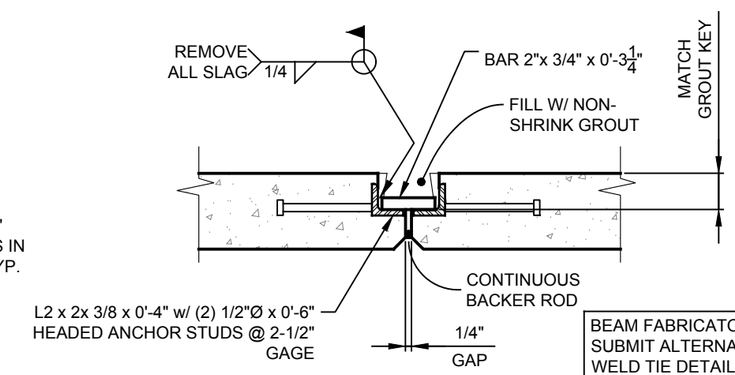

WELD TIE DETAIL

NOT TO SCALE

BEAM FABRICATOR MAY SUBMIT ALTERNATE WELD TIE DETAIL FOR APPROVAL.

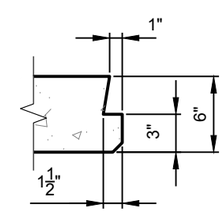

GROUT KEY

NOT TO SCALE

NOTE: BEAM FABRICATOR MAY SUBMIT ALTERNATE GROUT KEY DETAIL FOR APPROVAL

USDA FOREST SERVICE

United States Department of Agriculture
Forest Service

REGION 6

PACIFIC NORTHWEST REGION

PROJECT NAME

LODGEPOLE CREEK BRIDGE DESIGN

RD 6500000 MP 8.63

STRUCTURE NO. 061707000037203

OKANOGAN-WENATCHEE NATIONAL FOREST

WENATCHEE RIVER RANGER DISTRICT

DRAWING TITLE

SUPERSTRUCTURE DETAILS

DATE MAR-26	
ARCHIVE NO. R34905	
DESIGNER P. DONNER	DWG SHEET NO. 17
DRAWN P. DONNER	
CHECKED A. GROESBECK	SHEET 17 OF 30
PROJECT NO. 7333.30	

3/18/26 13:20 PATRICIA.DONNER C:\DJA-PW\WORK\DJA-PROD\DMS37647\7333.30 LODGEPOLE CREEK BRIDGE - DETAILS.DWG:

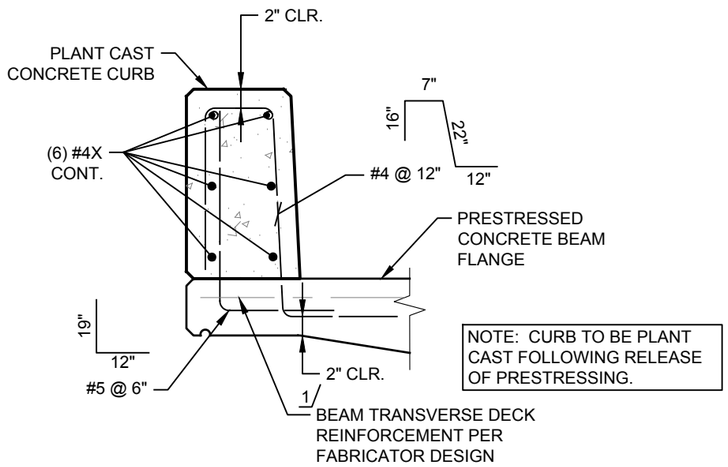

NOTE: CURB TO BE PLANT CAST FOLLOWING RELEASE OF PRESTRESSING.

CURB REINFORCING

NOT TO SCALE

1/ FABRICATOR TO PROVIDE A MINIMUM OF #5 @ 6" OC TRANSVERSE DECK REINFORCEMENT IN EXTERIOR BEAM FLANGES.

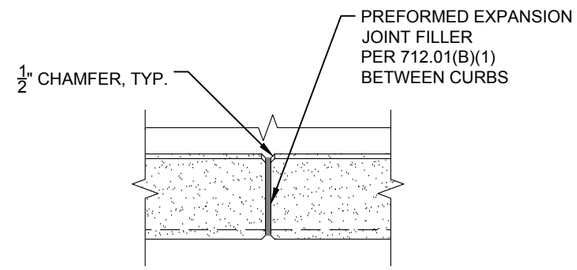

PLAN VIEW

CURB JOINT DETAIL

NOT TO SCALE

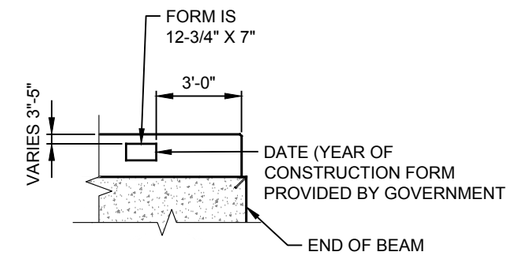

ELEVATION

CONSTRUCTION DATE DETAIL

NOT TO SCALE

United States Department of Agriculture
Forest Service

REGION 6

PACIFIC NORTHWEST REGION

PROJECT NAME

LODGEPOLE CREEK BRIDGE DESIGN

RD 6500000 MP 8.63

STRUCTURE NO. 061707000037203

OKANOGAN-WENATCHEE NATIONAL FOREST

WENATCHEE RIVER RANGER DISTRICT

DRAWING TITLE

SUPERSTRUCTURE DETAILS

DATE
MAR-26

ARCHIVE NO.
R34905

DESIGNER
P. DONNER

DRAWN
P. DONNER

CHECKED
A. GROESBECK

PROJECT NO.
7333.30

DWG SHEET NO.
18

SHEET 18 OF 30

3/18/26 13:20 PATRICIA.DONNER C:\DJA-PWWORK\DJA-PROD\DMS53764\7333.30 LODGEPOLE CREEK BRIDGE - DETAILS.DWG;

NOTE: PROVIDE THE FOREST SERVICE AT LEAST FIVE (5) BUSINESS DAYS ADVANCE NOTIFICATION PRIOR TO CONSTRUCTING IN-STREAM FEATURES. DO NOT BEGIN CONSTRUCTION OF IN-STREAM FEATURES WITHOUT PRIOR AUTHORIZATION FROM THE CO.

EXAMPLE STEP-POOL SECTION

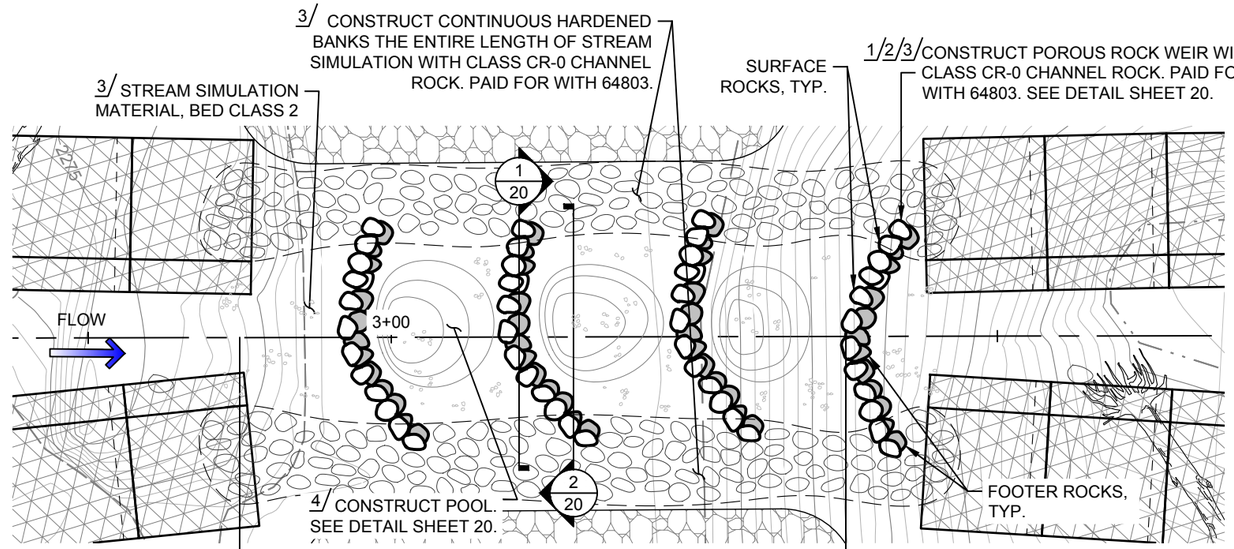

STREAM PLAN

NOT TO SCALE

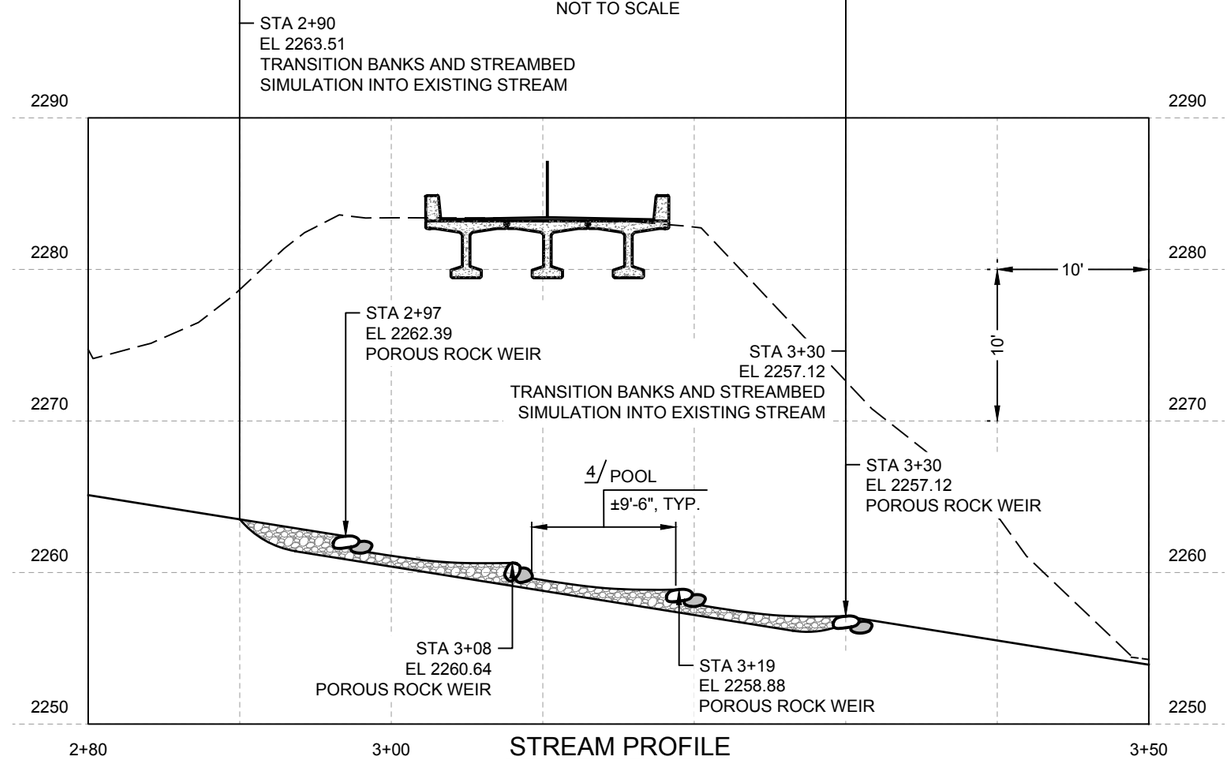

STREAM PROFILE

NOT TO SCALE

FOOTNOTES:

1/ INTER-MIX STREAMBED MATERIAL AS DIRECTED BY CO DURING PLACEMENT OF CHANNEL ROCK INSIDE THE CULVERT TO SEAL VOIDS THROUGHOUT THE SECTION.

2/ THE FINAL CHANNEL BOTTOM SHOULD BE A DENSE, WELL INTERLOCKED STREAMBED WITH LOW PERMEABILITY. COMPACT EACH LAYER AND FILL SURFACE VOIDS BY WASHING IN FINE MATERIAL. USE WATER PRESSURE TAMPING RODS, AND SIMILAR HAND OPERATED EQUIPMENT TO FORCE FINE MATERIAL INTO ALL SURFACE VOIDS.

3/ NATIVE MATERIAL MEETING GRADATION FOR THE SPECIFIED BED CLASS, AND CHANNEL ROCK MAY BE SALVAGED AND INCORPORATED INTO THE SIMULATED STREAMBED.

4/ 0'-6" TOLERANCE FOR POOL AND RIFFLE LENGTHS AND 2'-6" TOLERANCE ON CHANNEL WIDTHS TO ACCOUNT FOR NATURAL VARIABILITY.

United States Department of Agriculture
Forest Service

REGION 6
PACIFIC NORTHWEST REGION

PROJECT NAME

LODGEPOLE CREEK BRIDGE DESIGN

RD 6500000 MP 8.63

STRUCTURE NO. 061707000037203

OKANOGAN-WENATCHEE NATIONAL FOREST

WENATCHEE RIVER RANGER DISTRICT

DRAWING TITLE

STREAM SIMULATION PLAN & PROFILE

DATE MAR-26	
ARCHIVE NO. R34905	
DESIGNER A. REILLY	DWG SHEET NO. 19
DRAWN A. REILLY	
CHECKED B. KAMRUD	SHEET 19 OF 30
PROJECT NO. 7333.30	

3/18/26 10:40 PATRICIA.DONNER C:\DJA-PW\WORK\DJA-PROD\DMS53750\LODGEPOLE_CIVIL.DWG;

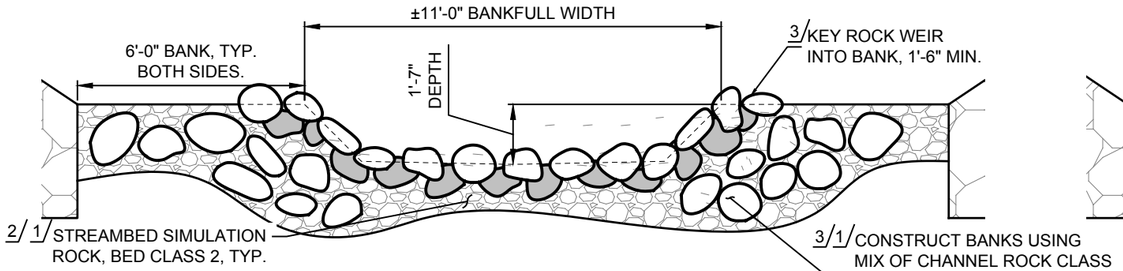

1/20 TYPICAL POROUS ROCK WEIR SECTION

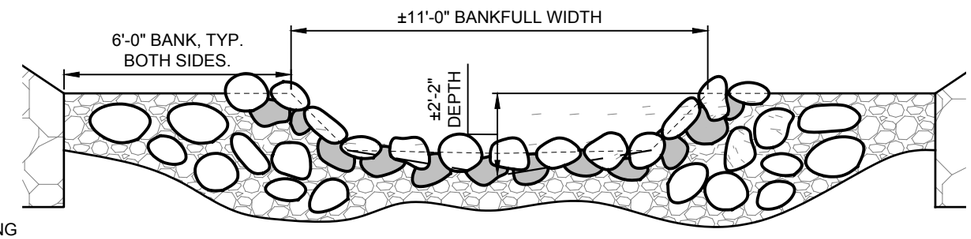

2/20 TYPICAL POOL SECTION

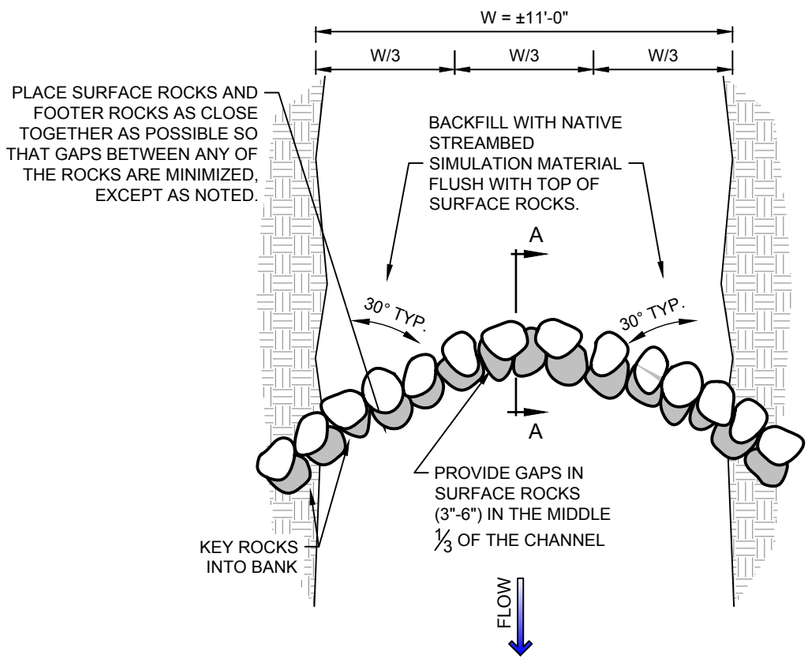

ROCK WEIR PLAN

NOT TO SCALE

BED CLASS 2 STREAMBED SIMULATION ROCK

FIELD MIX GUIDE

PROPORTIONS	CLASS 2
1 UNITS	10" - 4"
2 UNITS	4" - 1 3/4"
2 UNITS	1 3/4" - 1/2"
1 UNITS	1/2" - No. 10 (FINES)
1/2 UNITS	< No. 10 (FINES)

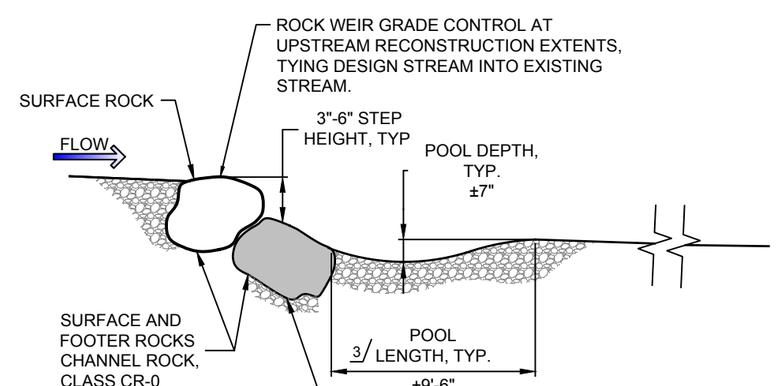

A/20 ROCK WEIR PROFILE

NOT TO SCALE

FOOTNOTES:

1/ INTER-MIX STREAMBED MATERIAL AS DIRECTED BY CO DURING PLACEMENT OF CHANNEL ROCK INSIDE THE CULVERT TO SEAL VOIDS THROUGHOUT THE SECTION.

2/ THE FINAL CHANNEL BOTTOM SHOULD BE A DENSE, WELL INTERLOCKED STREAMBED WITH LOW PERMEABILITY. COMPACT EACH LAYER AND FILL SURFACE VOIDS BY WASHING IN FINE MATERIAL. USE WATER PRESSURE TAMPING RODS, AND SIMILAR HAND OPERATED EQUIPMENT TO FORCE FINE MATERIAL INTO ALL SURFACE VOIDS.

3/ NATIVE MATERIAL MEETING GRADATION FOR THE SPECIFIED BED CLASS, AND CHANNEL ROCK MAY BE SALVAGED AND INCORPORATED INTO THE SIMULATED STREAMBED.

United States Department of Agriculture
Forest Service

REGION 6
PACIFIC NORTHWEST REGION

PROJECT NAME

LODGEPOLE CREEK BRIDGE DESIGN

RD 6500000 MP 8.63

STRUCTURE NO. 061707000037203

OKANOGAN-WENATCHEE NATIONAL FOREST

WENATCHEE RIVER RANGER DISTRICT

DRAWING TITLE

STREAM SIMULATION DETAILS

DATE MAR-26	
ARCHIVE NO. R34905	
DESIGNER A. REILLY	DWG SHEET NO. 20
DRAWN A. REILLY	
CHECKED B. KAMRUD	SHEET 20 OF 30
PROJECT NO. 7333.30	

3/18/26 10:40 PATRICIA.DONNER C:\DJA-PW\WORK\DJA-PROD\DMS53750\LODGEPOLE_CIVIL.DWG;

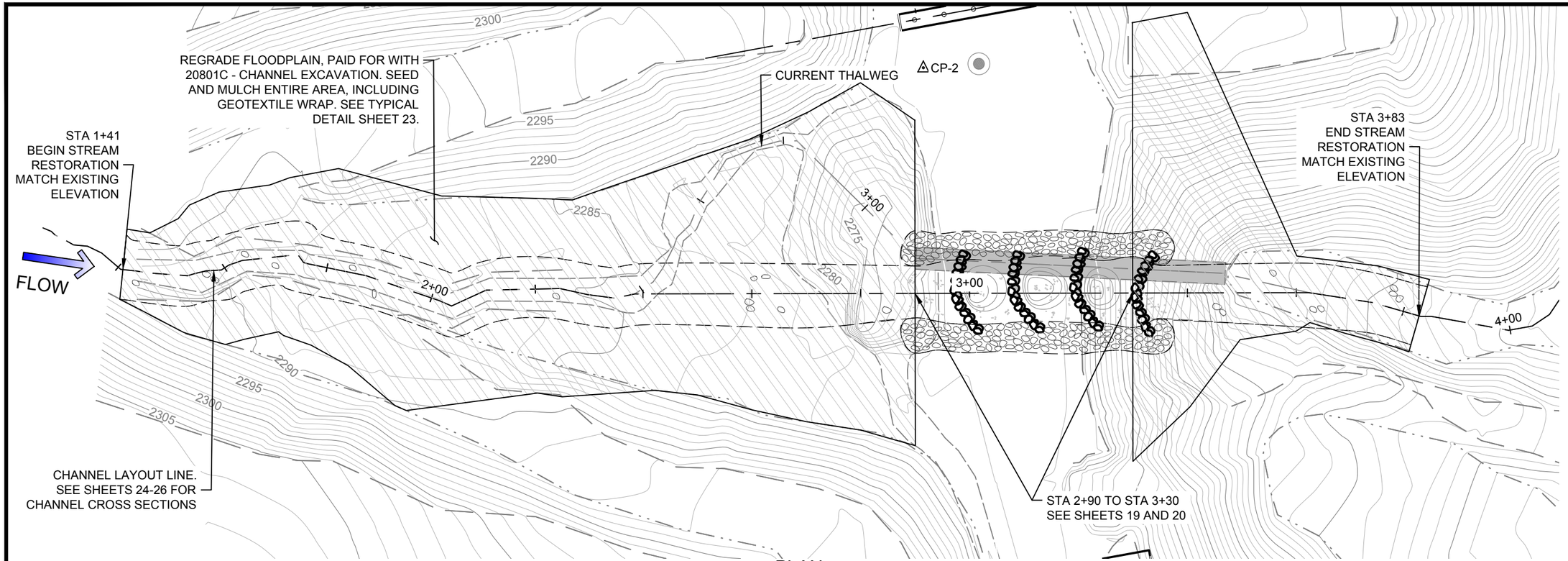

PLAN

CENTERLINE POINTS				
POINT #	NORTHING	EASTING	ELEVATION	DESCRIPTION
1000	319718.28	1597426.50	2289.58	STA 1+41
1001	319711.10	1597421.11	2287.08	STA 1+50
1002	319702.11	1597417.15	2284.30	STA 1+60
1003	319692.77	1597413.91	2282.70	STA 1+70
1004	319685.97	1597407.49	2281.10	STA 1+80
1005	319678.85	1597400.49	2279.50	STA 1+90
1006	319672.39	1597392.85	2277.90	STA 2+00
1007	319664.00	1597389.01	2276.31	STA 2+10
1008	319655.20	1597384.42	2274.71	STA 2+20
1009	319647.28	1597378.43	2273.11	STA 2+30
1010	319638.73	1597373.48	2271.51	STA 2+40
1011	319630.15	1597368.34	2269.91	STA 2+50
1012	319621.56	1597363.21	2268.31	STA 2+60

CENTERLINE POINTS				
POINT #	NORTHING	EASTING	ELEVATION	DESCRIPTION
1013	319612.98	1597358.08	2266.71	STA 2+70
1014	319604.40	1597352.94	2265.11	STA 2+80
1015	319595.82	1597347.81	2263.51	STA 2+90
1016	319587.24	1597342.68	2261.91	STA 3+00
1017	319578.66	1597337.54	2260.32	STA 3+10
1018	319570.07	1597332.41	2258.72	STA 3+20
1019	319561.49	1597327.27	2257.12	STA 3+30
1020	319552.91	1597322.14	2255.52	STA 3+40
1021	319544.33	1597317.01	2253.92	STA 3+50
1022	319535.75	1597311.87	2252.32	STA 3+60
1023	319527.86	1597305.77	2250.72	STA 3+70
1024	319520.69	1597298.82	2249.12	STA 3+80
1025	319518.64	1597296.63	2248.64	STA 3+83

STREAM RESTORATION CENTERLINE POINTS

United States Department of Agriculture
Forest Service

REGION 6
PACIFIC NORTHWEST REGION

PROJECT NAME
LODGEPOLE CREEK BRIDGE DESIGN

RD 6500000 MP 8.63

STRUCTURE NO.
061707000037203

OKANOGAN-WENATCHEE NATIONAL FOREST

WENATCHEE RIVER RANGER DISTRICT

DRAWING TITLE
STREAM RESTORATION LAYOUT

DATE
MAR-26

ARCHIVE NO.
R34905

DESIGNER
A. REILLY

DRAWN
A. REILLY

CHECKED
B. KAMRUD

PROJECT NO.
7333.30

DWG SHEET NO.
21

SHEET 21 OF 30

3/18/26 10:40 PATRICIA.DONNER C:\DJA-PWWORK\DJA-PROD\DMS53750\LODGEPOLE_CIVIL.DWG;

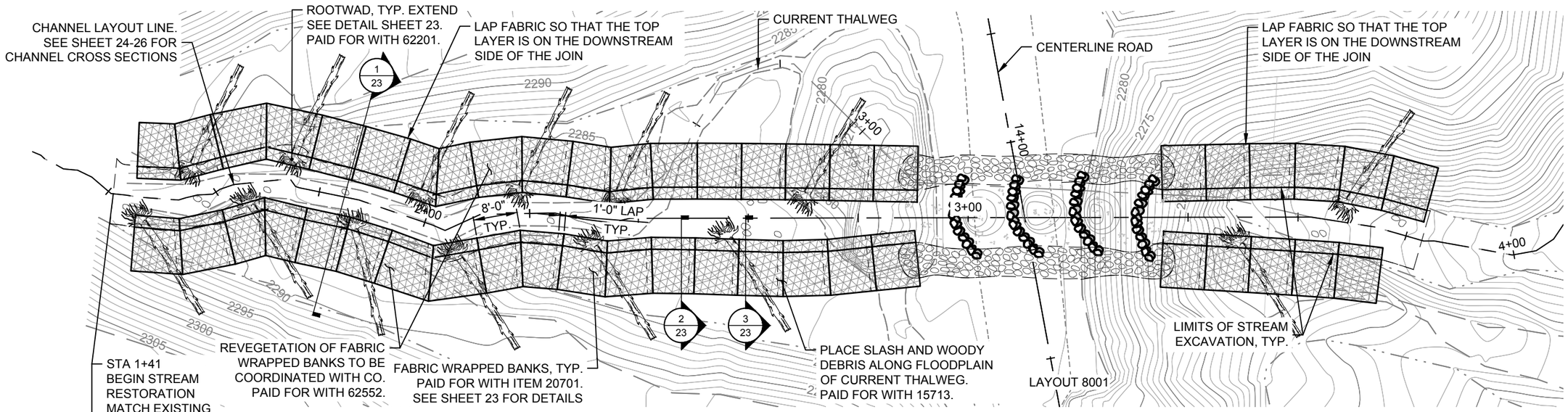

PLAN

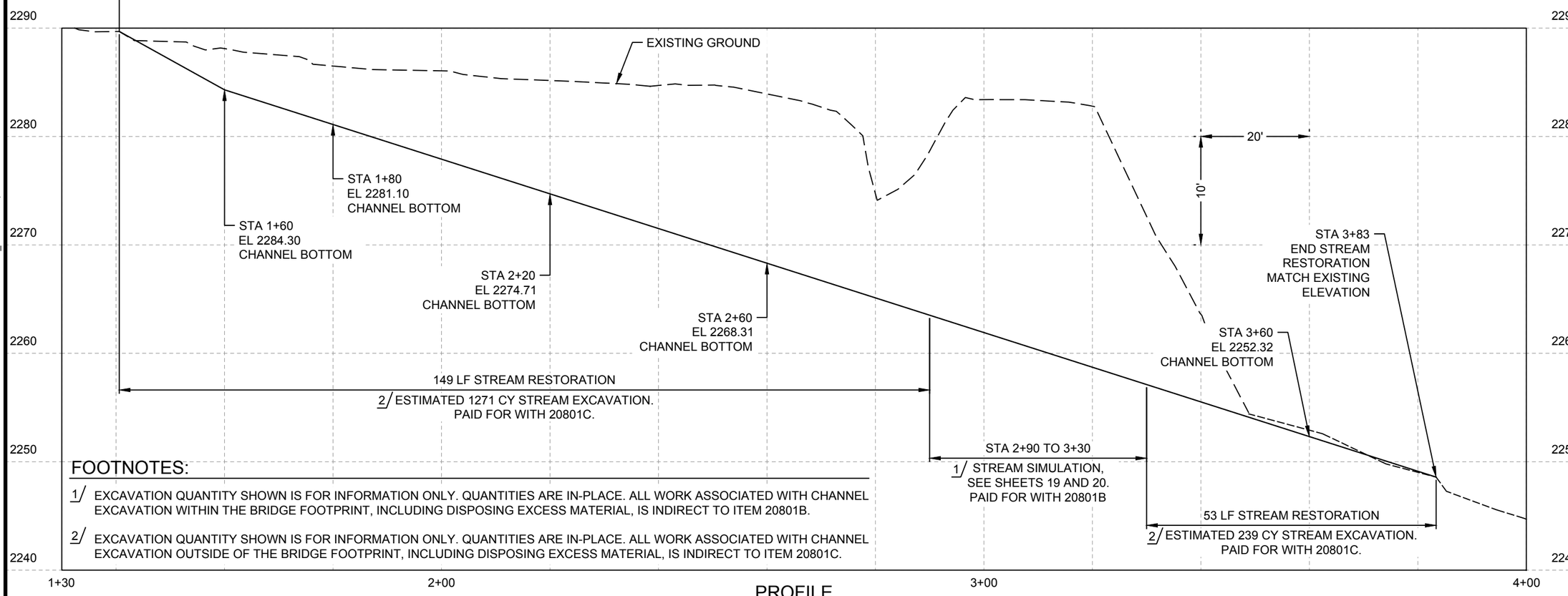

PROFILE

FOOTNOTES:

1/ EXCAVATION QUANTITY SHOWN IS FOR INFORMATION ONLY. QUANTITIES ARE IN-PLACE. ALL WORK ASSOCIATED WITH CHANNEL EXCAVATION WITHIN THE BRIDGE FOOTPRINT, INCLUDING DISPOSING EXCESS MATERIAL, IS INDIRECT TO ITEM 20801B.

2/ EXCAVATION QUANTITY SHOWN IS FOR INFORMATION ONLY. QUANTITIES ARE IN-PLACE. ALL WORK ASSOCIATED WITH CHANNEL EXCAVATION OUTSIDE OF THE BRIDGE FOOTPRINT, INCLUDING DISPOSING EXCESS MATERIAL, IS INDIRECT TO ITEM 20801C.

USDA FOREST SERVICE

United States Department of Agriculture
Forest Service

REGION 6
PACIFIC NORTHWEST REGION

PROJECT NAME

LODGEPOLE CREEK BRIDGE DESIGN

RD 6500000 MP 8.63

STRUCTURE NO. 061707000037203

OKANOGAN-WENATCHEE NATIONAL FOREST

WENATCHEE RIVER RANGER DISTRICT

DRAWING TITLE

STREAM RESTORATION PLAN & PROFILE

DATE
MAR-26

ARCHIVE NO.
R34905

DESIGNER
A. REILLY

DRAWN
A. REILLY

CHECKED
B. KAMRUD

PROJECT NO.
7333.30

DWG SHEET NO.
22

SHEET 22 OF 30

3/18/26 10:40 PATRICIA.DONNER C:\DJA-PW\WORK\DJA-PROD\DMS53750\LODGEPOLE_CIVIL.DWG;

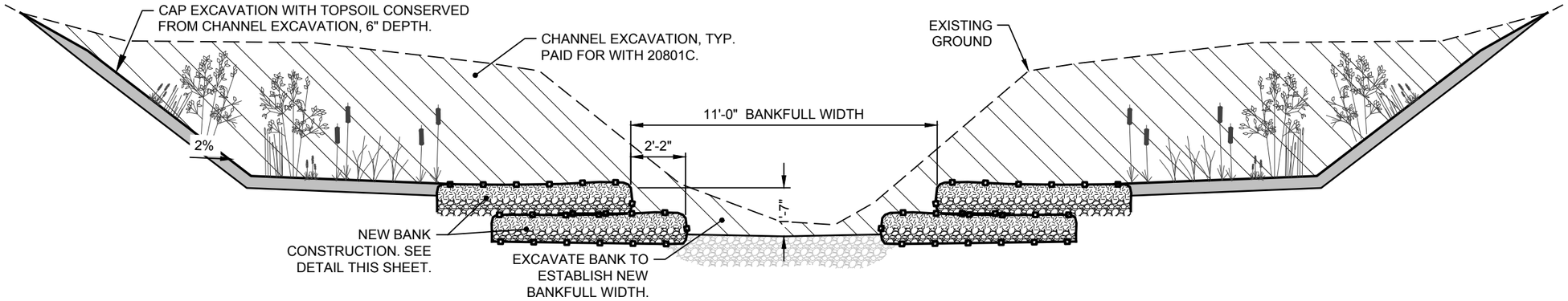

1/23 TYPICAL CHANNEL SECTION
NOT TO SCALE

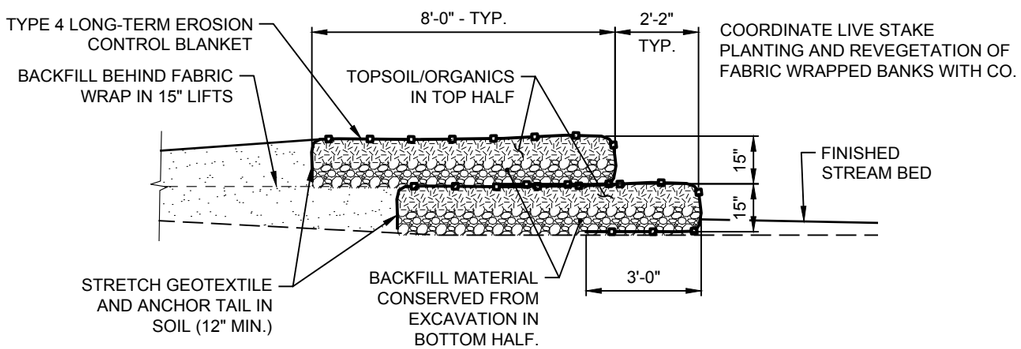

2/23 TYPICAL GEOTEXTILE FABRIC WRAP BANK
NOT TO SCALE

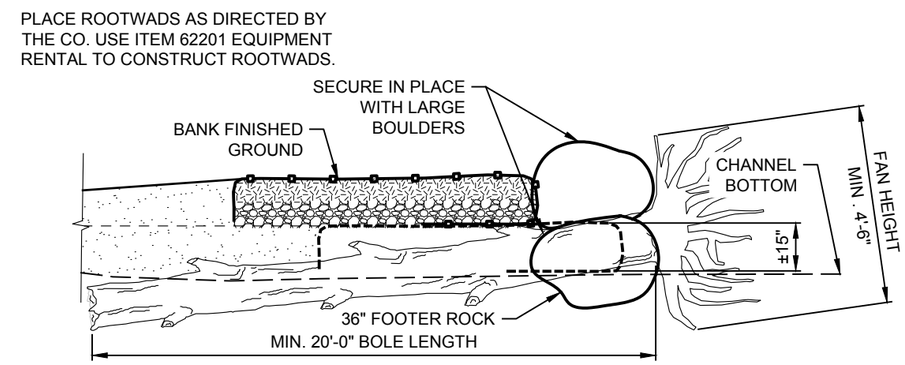

3/23 TYPICAL ROOTWAD
NOT TO SCALE

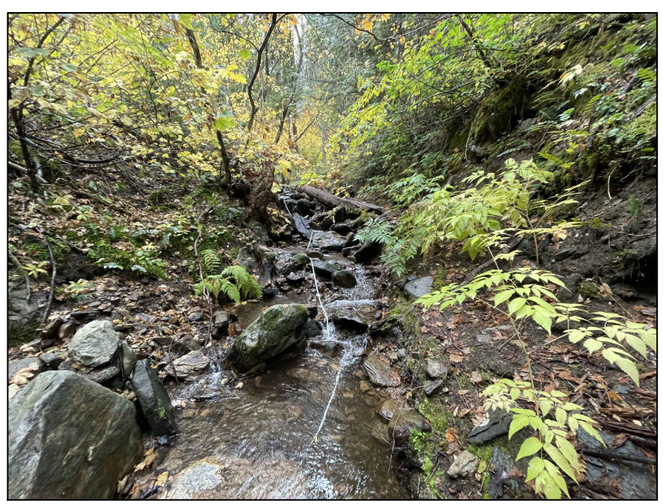

TYPICAL CHANNEL EXAMPLE WITH WOODY DEBRIS

NOTES:

1. USE NATIVE MATERIAL SALVAGED FROM THE EXCAVATION MEETING THE SPECIFICATIONS FOR STREAM SIMULATION ROCK, BED CLASS 4 (SEE SUBSECTION 705.08A OF THE SPECIFICATIONS) TO FORM CHANNEL BED.

   THE FINAL CHANNEL BOTTOM SHOULD BE A DENSE, WELL INTERLOCKED STREAMBED WITH LOW PERMEABILITY. COMPACT EACH LAYER AND FILL SURFACE VOIDS BY WASHING IN FINE MATERIAL. USE WATER PRESSURE, TAMPING RODS, AND SIMILAR HAND OPERATED EQUIPMENT TO FORCE FINE MATERIAL INTO ALL SURFACE VOIDS.

2. THE CONTRACTOR IS RESPONSIBLE TO ENSURE THAT THE STREAM FLOW DOES NOT GO SUBSURFACE THROUGH THE NEW CHANNEL BED FOR A 48 HOUR PERIOD AFTER REWATERING.

3. NATIVE MATERIAL MEETING THE GRADATION FOR THE SPECIFIED BED CLASS, AND CHANNEL ROCK MAY BE SALVAGED AND INCORPORATED INTO THE SIMULATED STREAMBED AND BANKS.

4. INTER-MIX FINE NATIVE MATERIAL AS DIRECTED BY CO DURING PLACEMENT OF CHANNEL ROCK BANK TO SEAL VOIDS THROUGHOUT THE SECTION.

5. IF THERE ARE INSUFFICIENT QUANTITIES OF ROOTWAD LOGS FOR CONSTRUCTED STREAMBANKS, SUBSTITUTE CUT LOGS (TREE TOPS) FROM PROJECT CLEARING AREA. NATURALIZE THE CUT END BY EXCAVATOR MUNCHING TO SIMULATE A NATURALLY BROKEN LOG END.

6. SCATTER A LIGHT COVERING OF TREE BRANCHES, TOPS ON THE FABRIC WRAPPED STREAMBANK AREAS FOR SOIL MOISTURE RETENTION IN PLANTING AREAS. USE MATERIAL < 3 INCHES IN DIAMETER, AND AVERAGE < 3 INCHES IN DEPTH ON THE GROUND

United States Department of Agriculture
Forest Service

REGION 6
PACIFIC NORTHWEST REGION

PROJECT NAME

LODGEPOLE CREEK BRIDGE DESIGN

RD 6500000 MP 8.63

STRUCTURE NO. 061707000037203

OKANOGAN-WENATCHEE NATIONAL FOREST

WENATCHEE RIVER RANGER DISTRICT

DRAWING TITLE

STREAM RESTORATION DETAILS

DATE MAR-26	
ARCHIVE NO. R34905	
DESIGNER A. REILLY	DWG SHEET NO. 23
DRAWN A. REILLY	
CHECKED B. KAMRUD	SHEET 23 OF 30
PROJECT NO. 7333.30	

3/18/26 10:40 PATRICIA.DONNER C:\DJA-PW\WORK\DJA-PROD\DMS53750\LODGEPOLE_CIVIL.DWG;

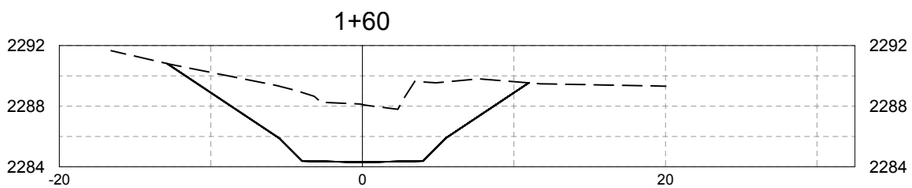

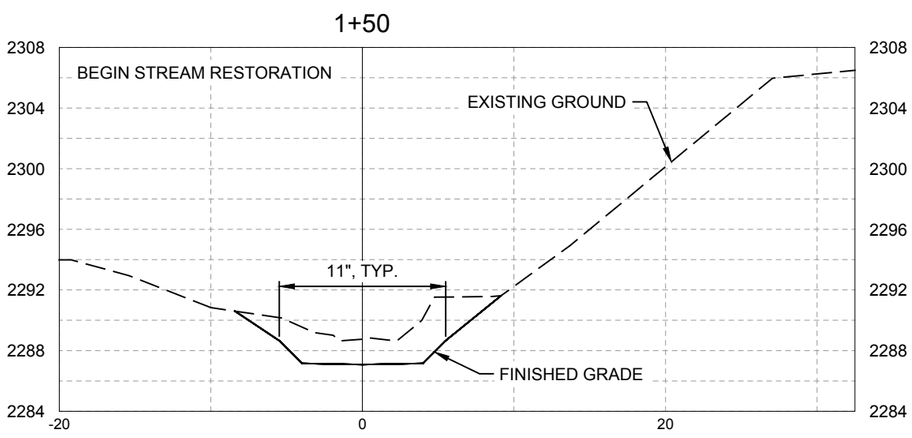

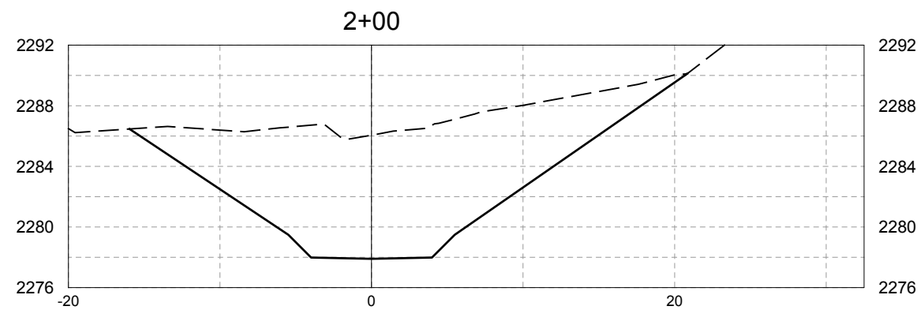

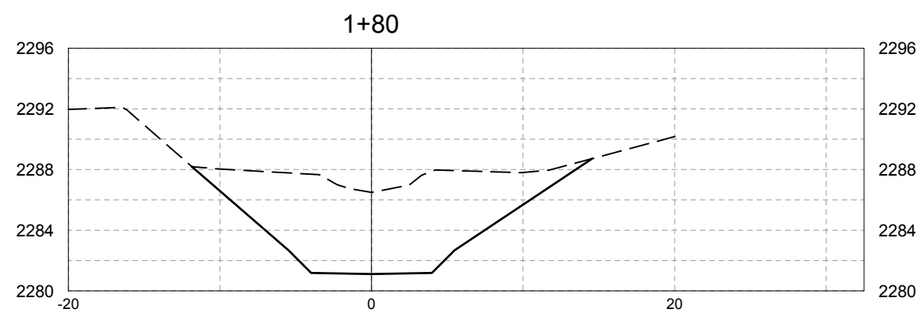

United States Department of Agriculture
Forest Service

REGION 6
PACIFIC NORTHWEST REGION

PROJECT NAME

LODGEPOLE CREEK BRIDGE DESIGN

RD 6500000 MP 8.63

STRUCTURE NO. 061707000037203

OKANOGAN-WENATCHEE NATIONAL FOREST

WENATCHEE RIVER RANGER DISTRICT

DRAWING TITLE

STREAM RESTORATION SECTIONS

DATE
MAR-26

ARCHIVE NO.
R34905

DESIGNER
A. REILLY

DRAWN
A. REILLY

CHECKED
B. KAMRUD

PROJECT NO.
7333.30

DWG SHEET NO.
24

SHEET 24 OF 30

3/18/26 10:40 PATRICIA.DONNER C:\DJA-PWWORK\DJA-PROD\DMS53750\LODGEPOLE_CIVIL.DWG;

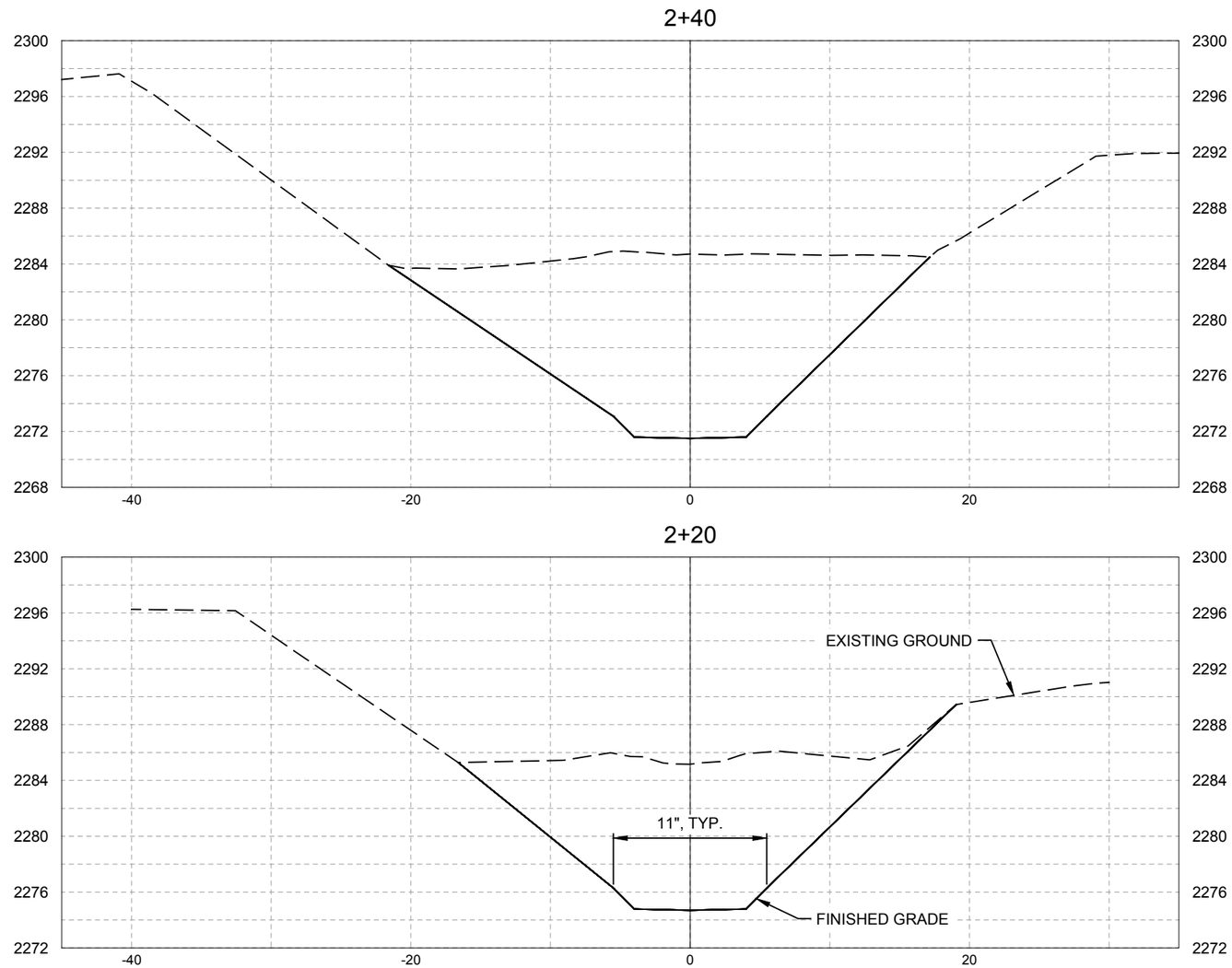

United States Department of Agriculture
Forest Service

REGION 6
PACIFIC NORTHWEST REGION

PROJECT NAME

LODGEPOLE CREEK BRIDGE DESIGN

RD 6500000 MP 8.63

STRUCTURE NO. 061707000037203

OKANOGAN-WENATCHEE NATIONAL FOREST

WENATCHEE RIVER RANGER DISTRICT

DRAWING TITLE

STREAM RESTORATION SECTIONS

DATE
MAR-26

ARCHIVE NO.
R34905

DESIGNER
A. REILLY

DRAWN
A. REILLY

CHECKED
B. KAMRUD

PROJECT NO.
7333.30

DWG SHEET NO.
25

SHEET 25 OF 30

3/18/26 10:40 PATRICIA.DONNER C:\DJA-PW\WORK\DJA-PROD\DMS53750\LODGEPOLE_CIVIL.DWG;

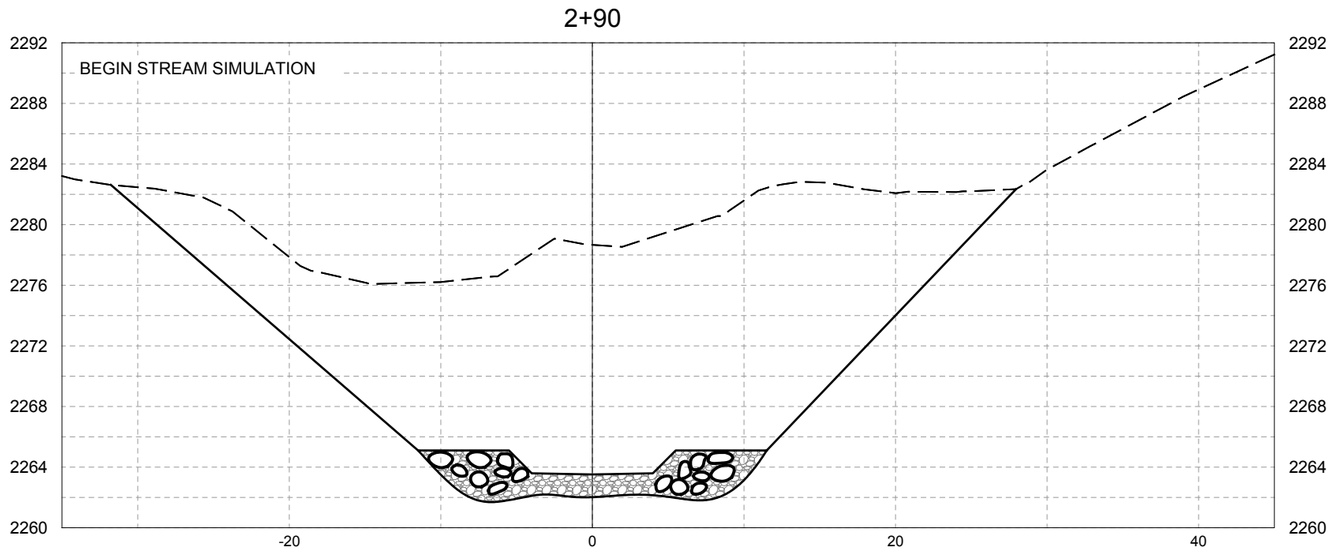

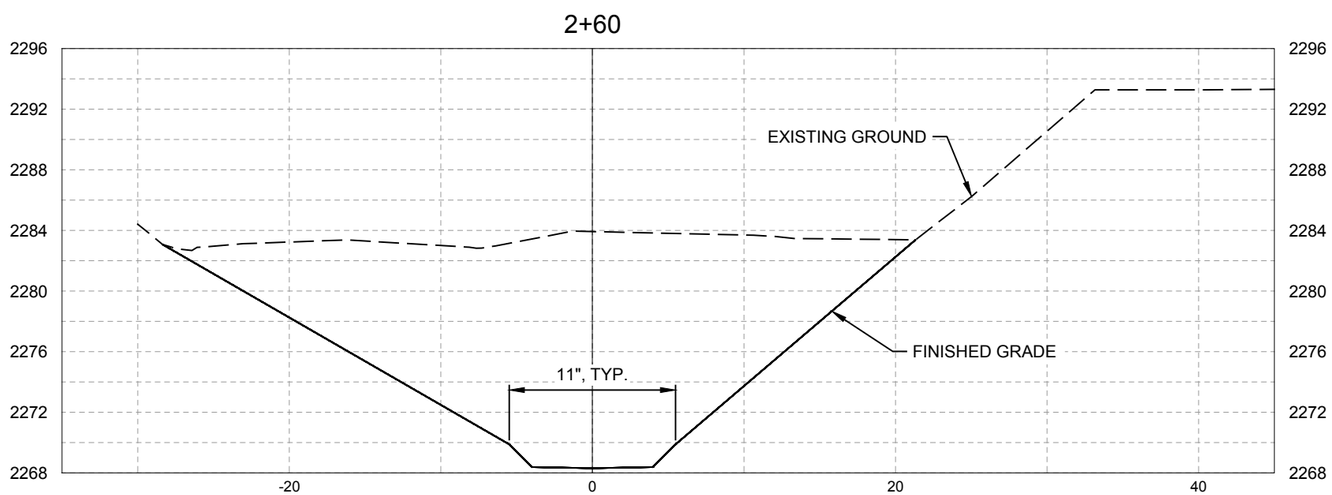

United States Department of Agriculture
Forest Service

REGION 6
PACIFIC NORTHWEST REGION

PROJECT NAME

LODGEPOLE CREEK BRIDGE DESIGN

RD 6500000 MP 8.63

STRUCTURE NO. 061707000037203

OKANOGAN-WENATCHEE NATIONAL FOREST

WENATCHEE RIVER RANGER DISTRICT

DRAWING TITLE

STREAM RESTORATION SECTIONS

DATE
MAR-26

ARCHIVE NO.
R34905

DESIGNER
A. REILLY

DRAWN
A. REILLY

CHECKED
B. KAMRUD

PROJECT NO.
7333.30

DWG SHEET NO.
26

SHEET 26 OF 30

3/18/26 10:40 PATRICIA.DONNER C:\DJA-PWWORK\DJA-PROD\DMS53750\LODGEPOLE_CIVIL.DWG;

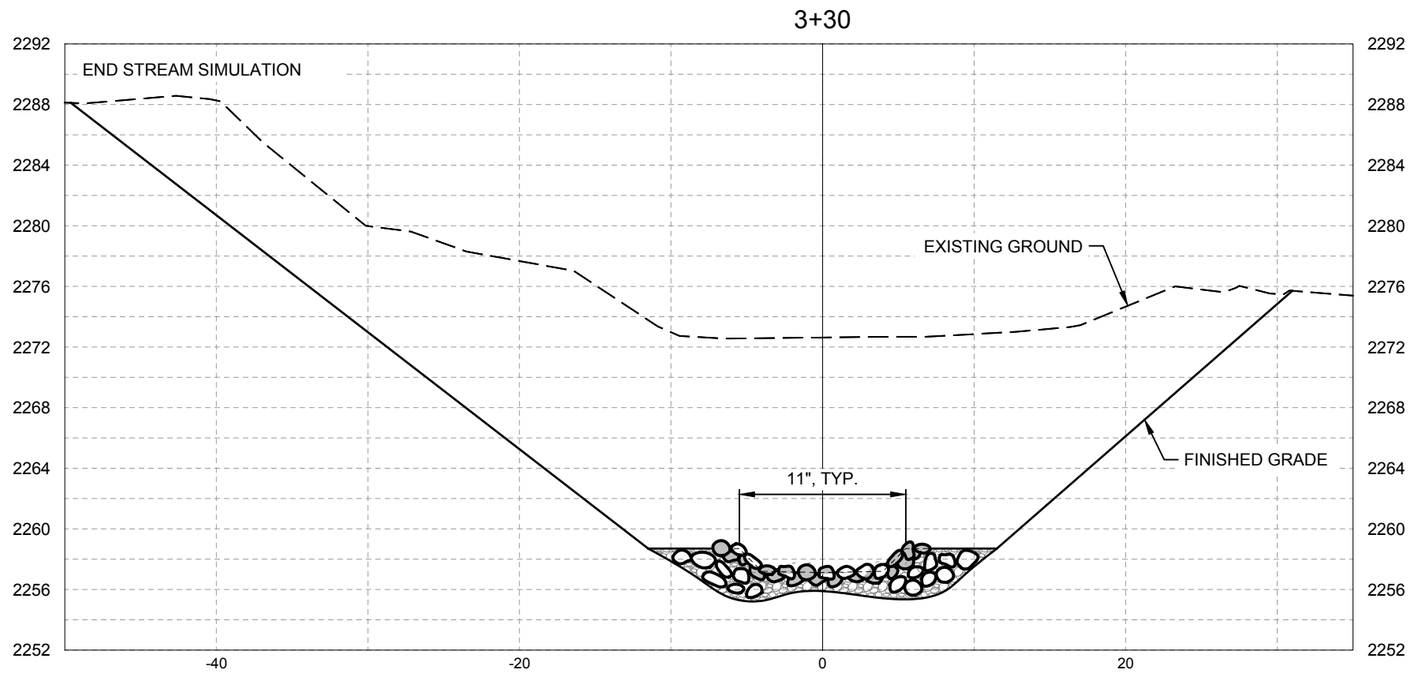

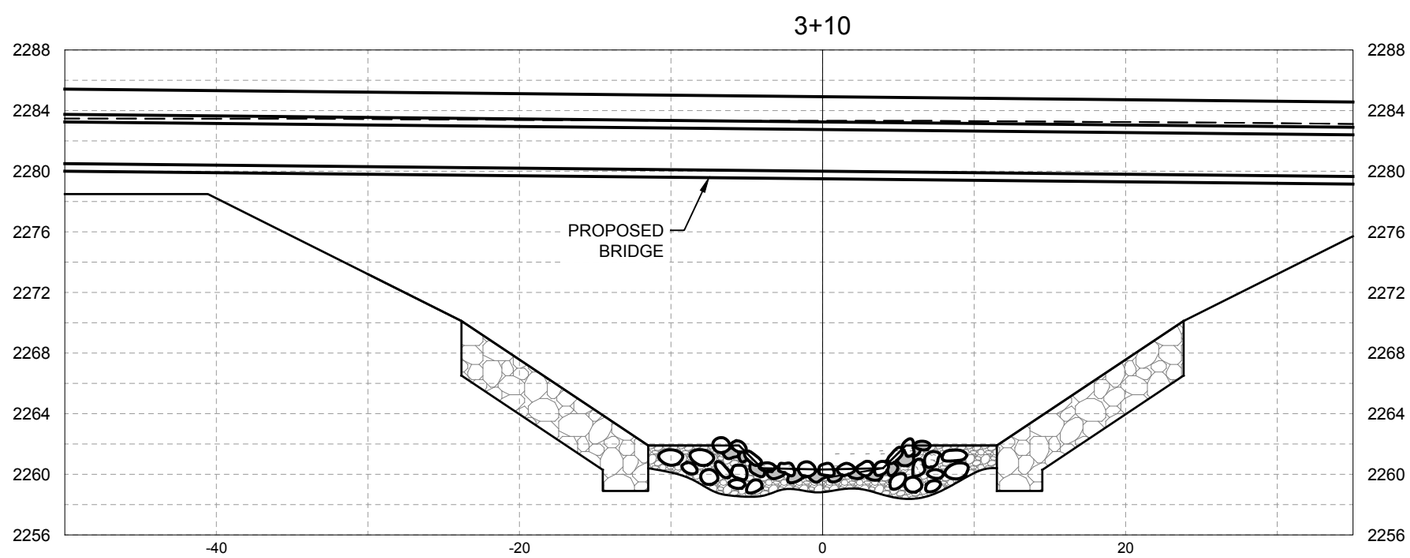

United States Department of Agriculture
Forest Service

REGION 6
PACIFIC NORTHWEST REGION

PROJECT NAME

LODGEPOLE CREEK BRIDGE DESIGN

RD 6500000 MP 8.63

STRUCTURE NO. 061707000037203

OKANOGAN-WENATCHEE NATIONAL FOREST

WENATCHEE RIVER RANGER DISTRICT

DRAWING TITLE

STREAM RESTORATION SECTIONS

DATE
MAR-26

ARCHIVE NO.
R34905

DESIGNER
A. REILLY

DRAWN
A. REILLY

CHECKED
B. KAMRUD

PROJECT NO.
7333.30

DWG SHEET NO.
27

SHEET 27 OF 30

3/18/26 10:40 PATRICIA.DONNER C:\DJA-PW\WORK\DJA-PROD\DMS53750\LODGEPOLE_CIVIL.DWG;

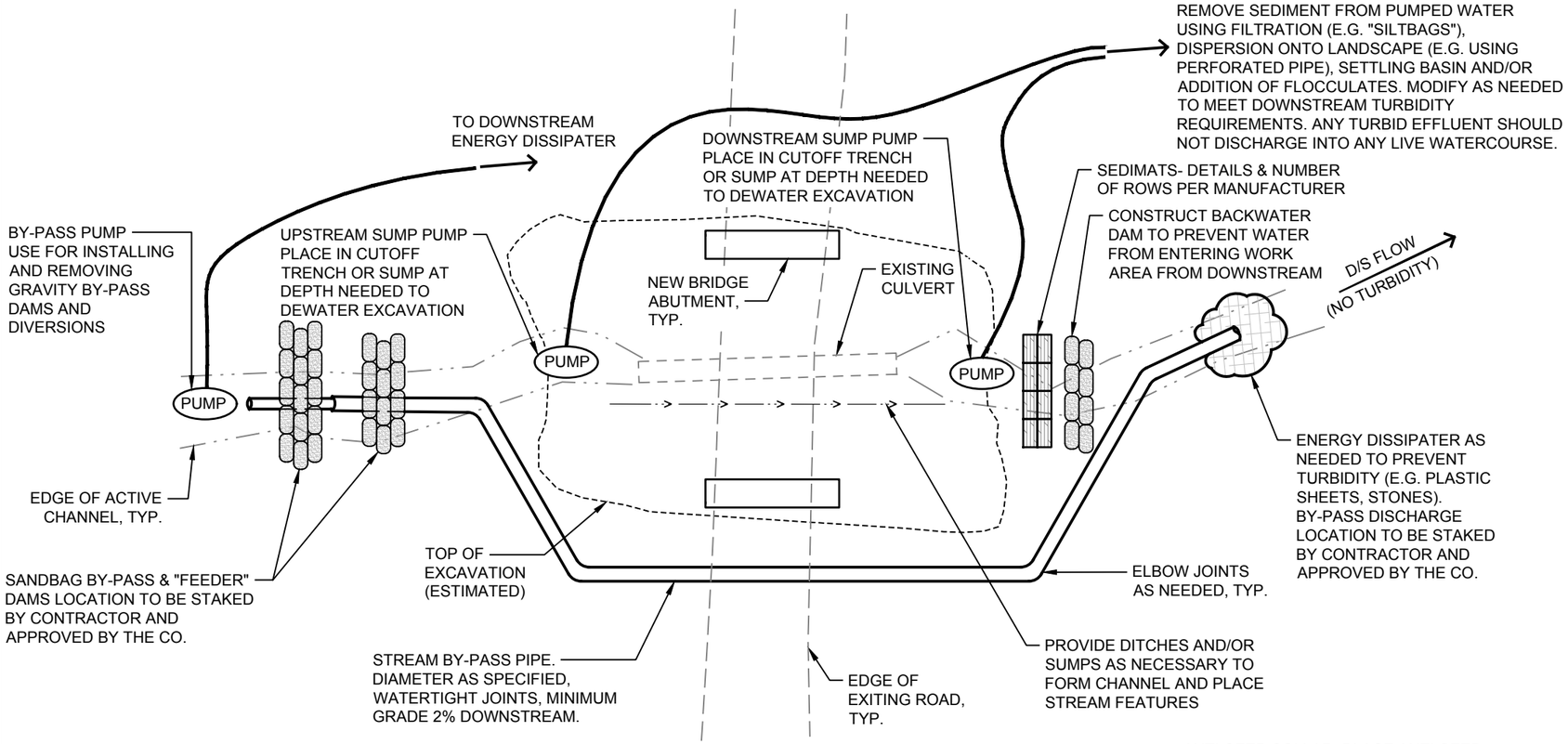

PLAN

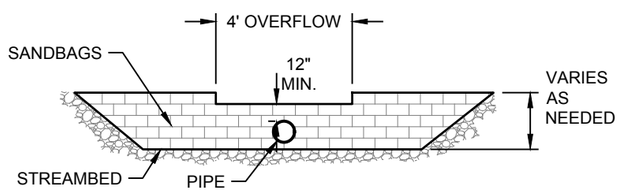

BYPASS DAM ELEVATION VIEW

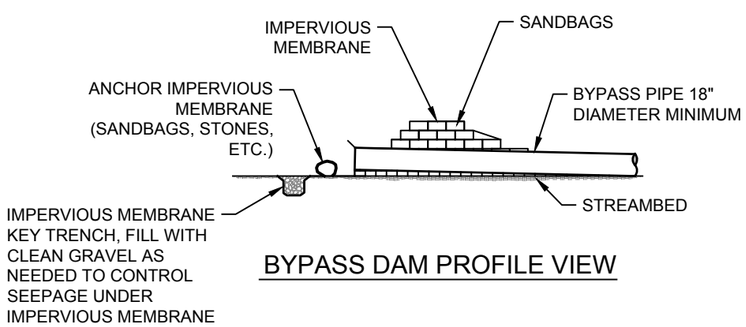

BYPASS DAM PROFILE VIEW

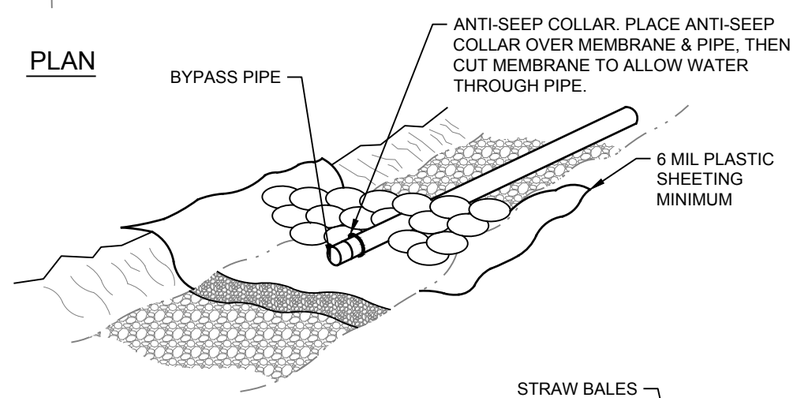

SANDBAG BYPASS DAM DETAILS

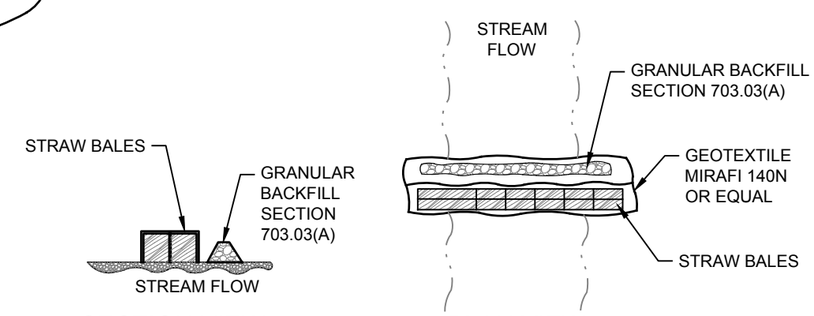

SECTION VIEW

PLAN VIEW

GEOTEXTILE-WRAPPED STRAW BALE SEDIMENT CONTROL WEIR

NOTES:

1. THE PLAN SHOWN HERE IS INTENDED TO REPRESENT THE GENERAL DEWATERING REQUIREMENTS AND NOT APPLICABLE TO A SPECIFIC SITE. SUBMIT A PLAN SPECIFIC TO THE SITE.
2. SUBMIT A DEWATERING PLAN TO THE CO FOR APPROVAL AT LEAST FOURTEEN (14) DAYS PRIOR TO BEGINNING WORK. CONSTRACTOR IS REQUIRED TO FOLLOW NMFS ARBO II WAC 173-201A-200(1)(E) REQUIRMENTS.
3. CONTRACTOR TO DETERMINE THE SIZE OF THE BYPASS PIPE(S).
4. ENSURE THAT THE BYPASS PIPE(S) AND DAM ARE FUNCTIONING PROPERLY. DO NOT PROCEED WITH CONSTRUCTION UNTIL THE IMPLEMENTED DEWATERING PLAN HAS BEEN INSPECTED AND ACCEPTED BY THE CO IN WRITING.
5. ENSURE PUMPS ARE BE CLEAN AND FREE OF LEAKS AND PLACED IN A CONTAINMENT KIT.
6. EXCAVATE DRAW DOWN POOL FOR SUMPS A MINIMUM OF 2 FEET BELOW THE BOTTOM OF THE EXCAVATION AND A MINIMUM OF 5 FEET IN DIAMETER.
7. MAINTAIN ALL ELEMENTS OF THE OPERATION IN ORDER TO DEWATER THE FOUNDATION, FACILITATE CONSTRUCTION, PREVENT HARM TO ALL AQUATIC ORGANISMS AND MINIMIZE SEDIMENT AND TURBIDITY FROM ENTERING THE STREAM. CONSTRUCT THE DEWATERING SYSTEM IN A MANNER WHICH ENABLES USFS BIOLOGISTS TO COLLECT AND TRANSPORT ORGANISMS FROM THE LIVE CHANNEL, JUST BEFORE COMPLETION OF THE DIVERSION DAM.
8. OPERATE PUMPS (PREFERABLY ELECTRIC) DOWNSTREAM OF THE BYPASS DAM IF THE DAM DOES NOT SEAL THOROUGHLY. MAINTAIN A PUMP RUNNING 24 HOURS A DAY IN THE DOWNSTREAM SEDIMENT RETENTION DAM TO DIVERT WATER CONTAINING SEDIMENT TO THE FOREST FLOOR WHERE IT WILL BE FILTERED BEFORE ENTERING BACK INTO THE STREAM. LEAVE PUMPS IN POSITION ON SITE EVEN IF WATER DISCHARGE DROPS CONSIDERABLY, TO BE PREPARED FOR STORM FLOWS.

United States Department of Agriculture
Forest Service

REGION 6
PACIFIC NORTHWEST REGION

PROJECT NAME
LODGEPOLE CREEK BRIDGE DESIGN

RD 6500000 MP 8.63

STRUCTURE NO. 061707000037203

OKANOGAN-WENATCHEE NATIONAL FOREST

WENATCHEE RIVER RANGER DISTRICT

DRAWING TITLE
DEWATERING REQUIREMENTS

DATE MAR-26	
ARCHIVE NO. R34905	
DESIGNER A. REILLY	DWG SHEET NO. 28
DRAWN A. REILLY	
CHECKED B. KAMRUD	SHEET 28 OF 30
PROJECT NO. 7333.30	

3/18/26 10:40 PATRICIA.DONNER C:\DJA-PW\WORK\DJA-PROD\DMS53750\LODGEPOLE_CIVIL.DWG;

SEGMENT	ELEVATION CHANGE (ft)	SEGMENT LENGTH (ft)	GRADIENT	% GRADIENT DIFFERENCE BETWEEN SUCCESSIVE SEGMENTS	MAXIMUM RESIDUAL POOL DEPTH (ft)	NUMBER OF GRADE CONTROLS	DISTANCE BETWEEN GRADE CONTROLS (ft)	% GRADIENT DIFFERENCE WITH DESIGN (S=15.99%)
A	6.75	29.43	22.93%	N/A	0.39	4	13, 2, 12	43.37%
B (REFERENCE)	12.13	98.88	12.03%	47.53%	0.59	9	7, 20, 9, 5, 5, 9, 21, 18	24.77%
C	7.20	132.05	5.45%	54.68%	0.18	7	10, 18, 15, 28, 44, 27	65.90%
CULVERT								
D	3.82	16.34	23.40%	329.21%	N/A	1	N/A	46.36%
E	10.43	91.73	11.37%	51.43%	N/A	3	13, 51	28.91%
F	1.98	40.81	4.85%	57.32%	N/A	2	22.00	69.66%
G	8.25	78.46	10.52%	116.80%	N/A	1	N/A	34.22%

LEGEND

- TOP OF BANK/FLOOD PLAIN
- B SEGMENT
- GRADE BREAK BEGINNING/END SEGMENT
- POOL
- STREAM CROSS SECTION

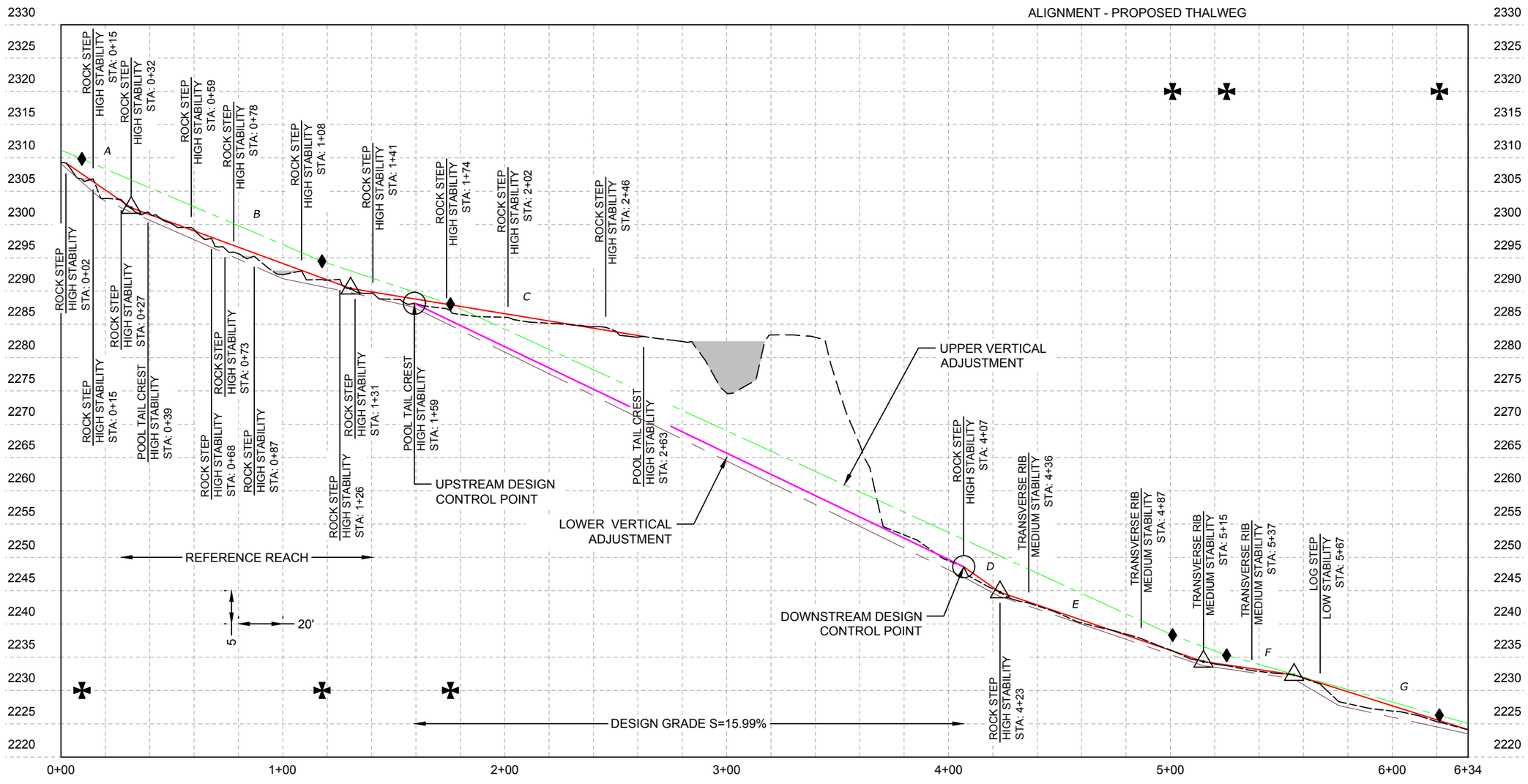

United States Department of Agriculture
Forest Service

REGION 6
PACIFIC NORTHWEST REGION

PROJECT NAME

LODGEPOLE CREEK BRIDGE DESIGN

RD 6500000 MP 8.63

STRUCTURE NO. 061707000037203

OKANOGAN-WENATCHEE NATIONAL FOREST

WENATCHEE RIVER RANGER DISTRICT

DRAWING TITLE

LONGITUDINAL PROFILE

DATE
MAR-26

ARCHIVE NO.
R34905

DESIGNER
A. REILLY

DRAWN
A. REILLY

CHECKED
B. KAMRUD

PROJECT NO.
7333.30

DWG SHEET NO.
29

SHEET 29 OF 30

3/18/26 10:40 PATRICIA.DONNER C:\DJA-PWWORK\DJA-PROD\DMS53750\LODGEPOLE_CIVIL.DWG;

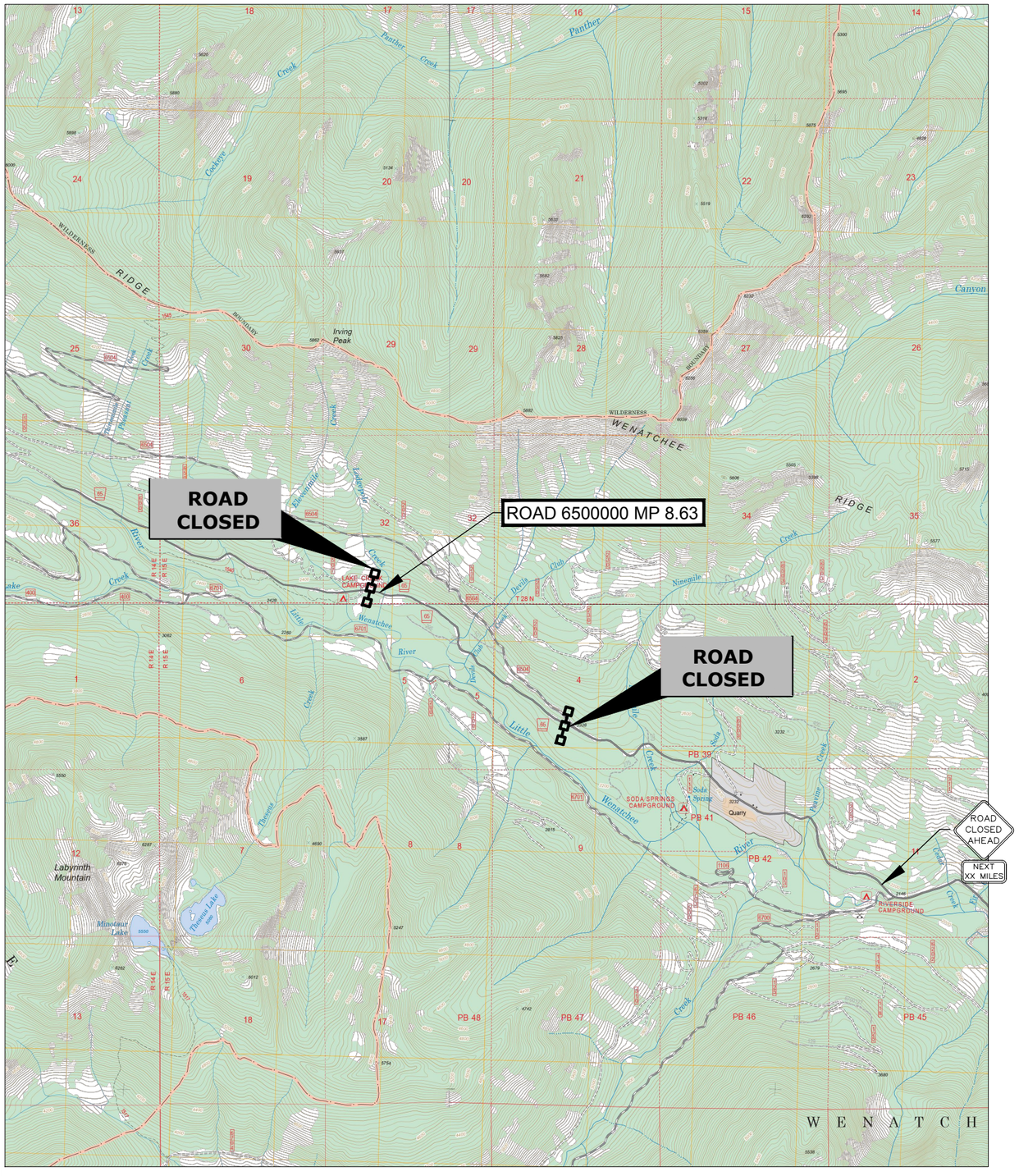

VICINITY MAP

CONCEPTUAL TRAFFIC CONTROL DIAGRAM

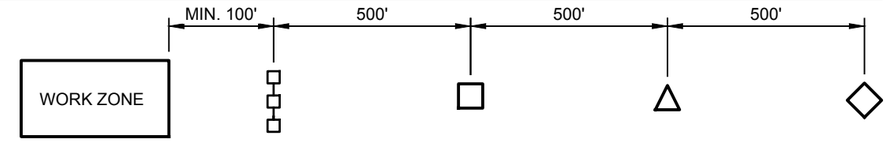

LEGEND

- "TRUCKS AHEAD" 36"x36"
- "ROAD CLOSED AHEAD" 36"x36"
- "ROAD WORK AHEAD" 36"x36"
- ROAD CLOSURE BARRICADE, TYPE III WITH ROAD CLOSED SIGN 30"x18"

SIGNAGE NOTES

1. SIGN DISTANCES AND LOCATIONS MAY BE ADJUSTED BASED ON ROAD CONDITIONS.
2. SIGNAGE MUST MEET MUTCD STANDARDS.
3. IN ADDITION TO THE SIGNS ABOVE, PLACE A "ROAD CLOSED AHEAD, XX MILES" WHERE SHOWN ON THE VICINITY MAP ON THIS SHEET.

TRAFFIC CONTROL NOTES

1. SUBMIT A TRAFFIC CONTROL PLAN FOR REVIEW PER SECTION 156 OF THE FOREST SERVICE SUPPLEMENTAL SPECIFICATIONS (FSSS).
2. THE CONCEPTUAL PLAN SHOWN REPRESENTS THE MINIMUM REQUIREMENTS FOR CLOSURE. THE CONTRACTOR IS RESPONSIBLE TO SUBMIT A TRAFFIC CONTROL PLAN AND FURNISH AND INSTALL ANY ADDITIONAL SIGNS THAT MAY BE REQUIRED BY THEIR OPERATIONS, AND IN ACCORDANCE WITH THE MANUAL ON UNIFORM TRAFFIC CONTROL DEVICES (MUTCD).
3. THE CONTRACTOR IS RESPONSIBLE TO NOTIFY THE CO IN WRITING AT LEAST THIRTY (30) DAYS PRIOR TO ANY PROPOSED ROAD CLOSURE.
4. PERFORM NO WORK THAT INTERFERES OR CONFLICTS WITH TRAFFIC OR EXISTING ACCESS TO THE ROADWAY SURFACE UNTIL A TRAFFIC CONTROL PLAN HAS BEEN APPROVED. POST CONSTRUCTION SIGNS AND TRAFFIC CONTROL DEVICES IN CONFORMANCE WITH MUTCD. ALL REQUIRED SIGNS WILL BE IN PLACE AND APPROVED PRIOR TO BEGINNING WORK ON PROJECT.
5. THE CONTRACTOR IS RESPONSIBLE TO MAINTAIN ALL TRAFFIC CONTROL SIGNS. IMMEDIATELY REPLACE ANY MISSING OR DEFACED SIGNS. REMOVE ALL SIGNS AND BARRICADES AT THE END OF THE CLOSURE PERIOD.
6. SIGN DISTANCES AND LOCATIONS MAY BE ADJUSTED BASED ON ROAD CONDITIONS

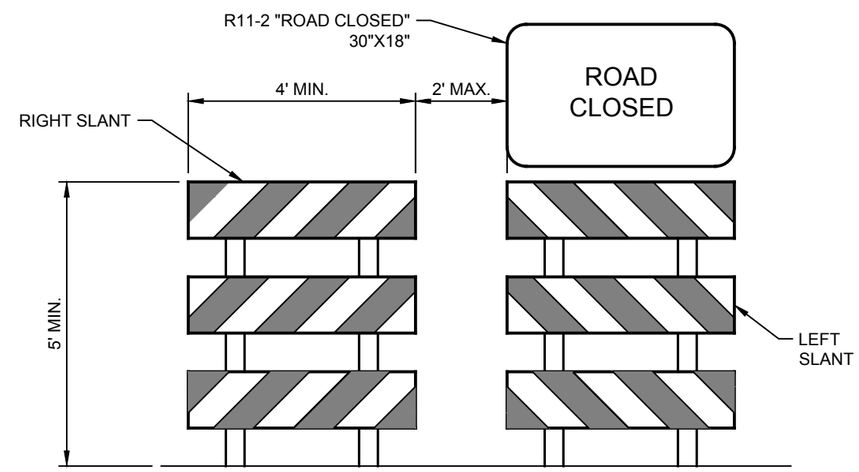

TYPE III BARRICADE FOR CLOSURE

United States Department of Agriculture
Forest Service

REGION 6
PACIFIC NORTHWEST REGION

PROJECT NAME

LODGEPOLE CREEK BRIDGE DESIGN

RD 6500000 MP 8.63

STRUCTURE NO. 061707000037203

OKANOGAN-WENATCHEE NATIONAL FOREST

WENATCHEE RIVER RANGER DISTRICT

DRAWING TITLE

TRAFFIC CONTROL

DATE MAR-26	
ARCHIVE NO. R34905	
DESIGNER P. DONNER	DWG SHEET NO. 30
DRAWN P. DONNER	
CHECKED A. GROESBECK	SHEET 30 OF 30
PROJECT NO. 7333.30	

3/18/26 10:40 PATRICIA.DONNER C:\DJA-PW\WORK\DJA-PROD\DMS53770\7333.30 COVERS.DWG;

LODGEPOLE CREEK
ROAD BRIDGE DESIGN
ROAD CROSS SECTIONS

PREPARED BY :

SHEET XS1 OF XS3

13+00.00

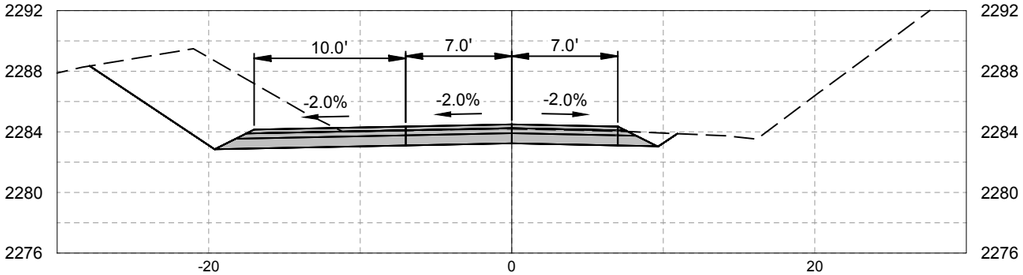

13+59.69

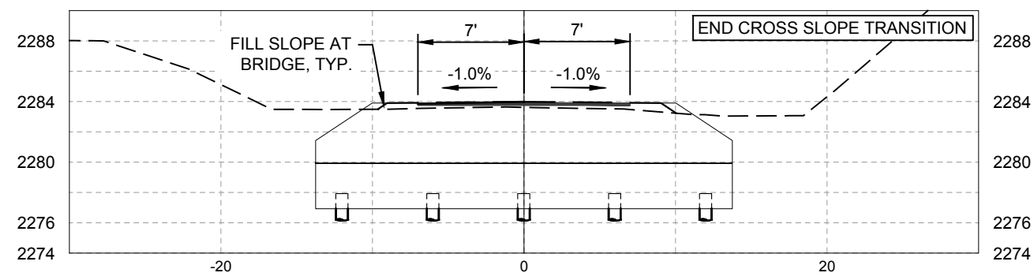

12+80.00

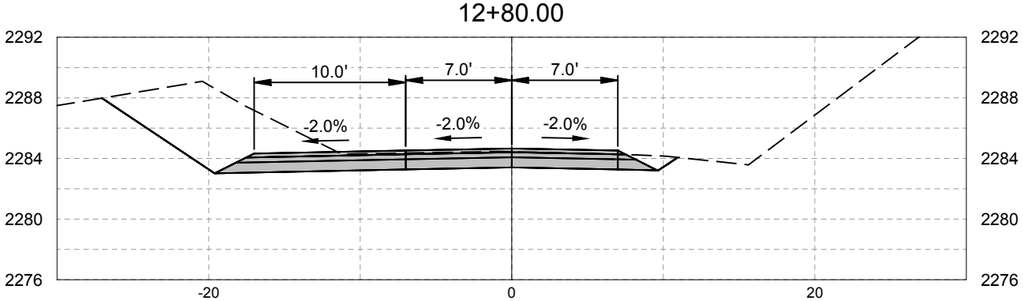

13+54.34

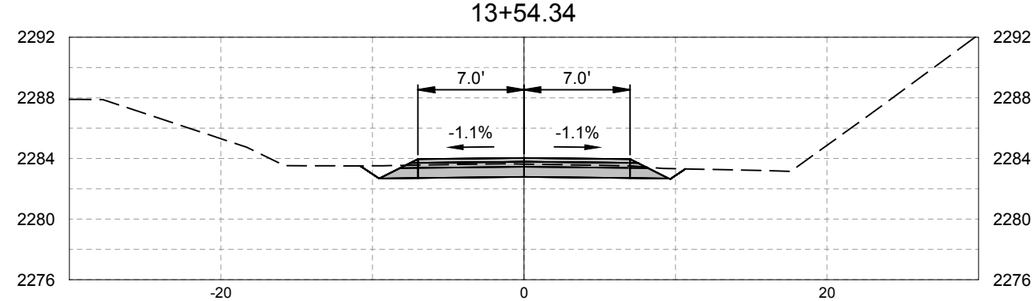

12+60.00

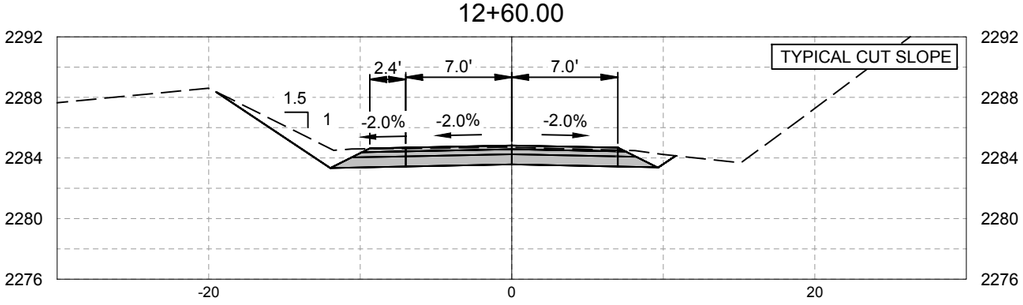

13+40.00

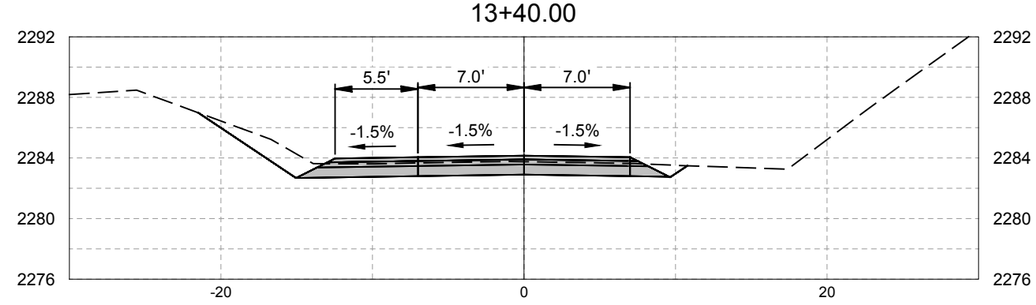

12+40.00

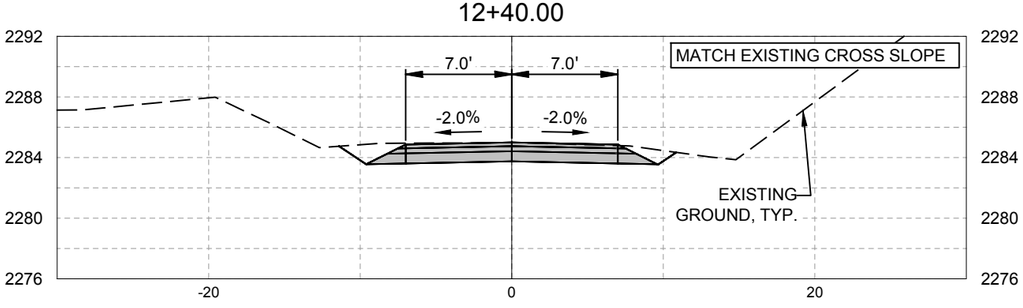

13+20.00

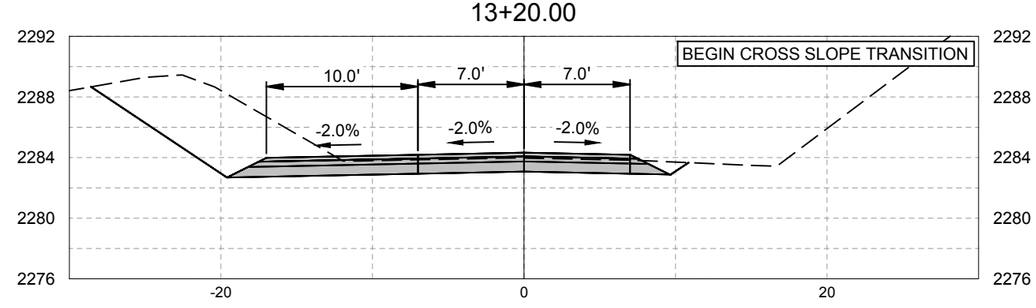

LODGEPOLE CREEK
ROAD BRIDGE DESIGN
ROAD CROSS SECTIONS

PREPARED BY :

SHEET XS2 OF XS3

14+80.00

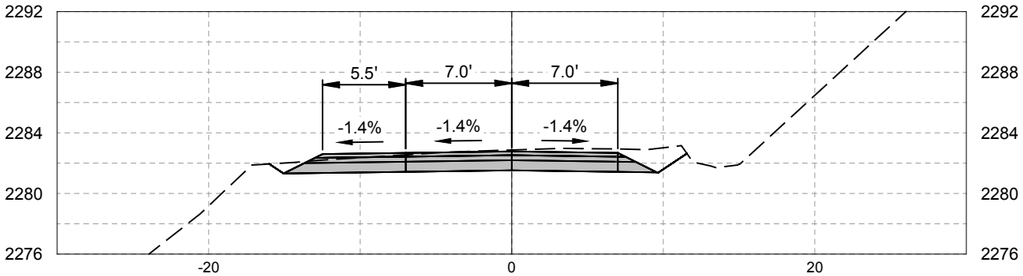

15+40.00

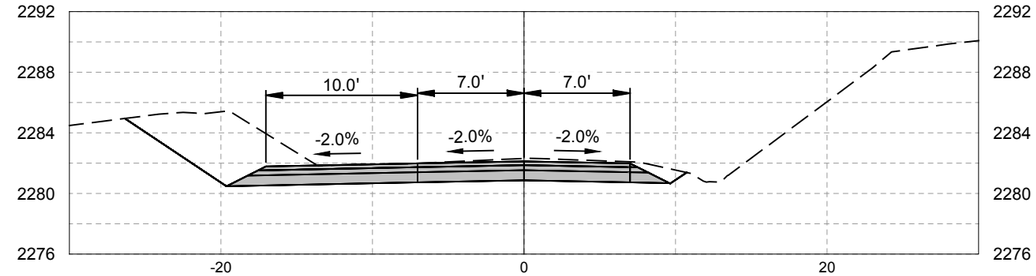

14+67.19

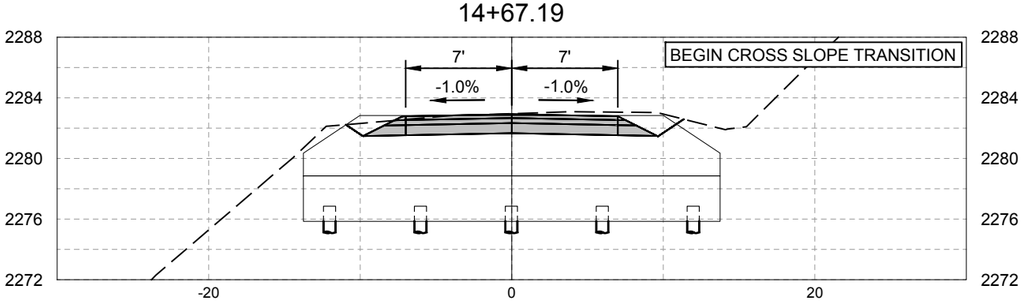

15+20.00

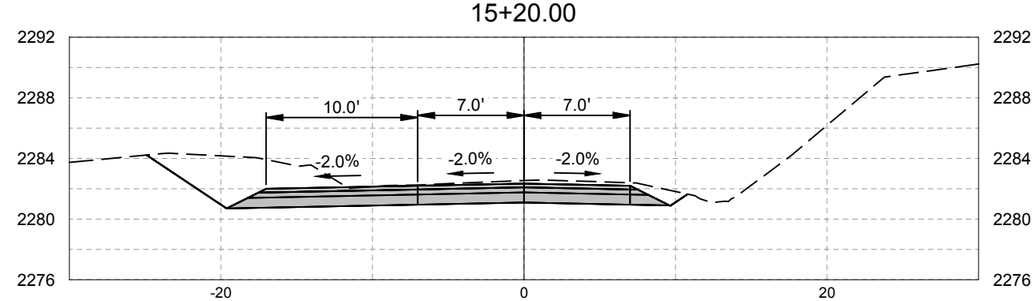

14+65.94

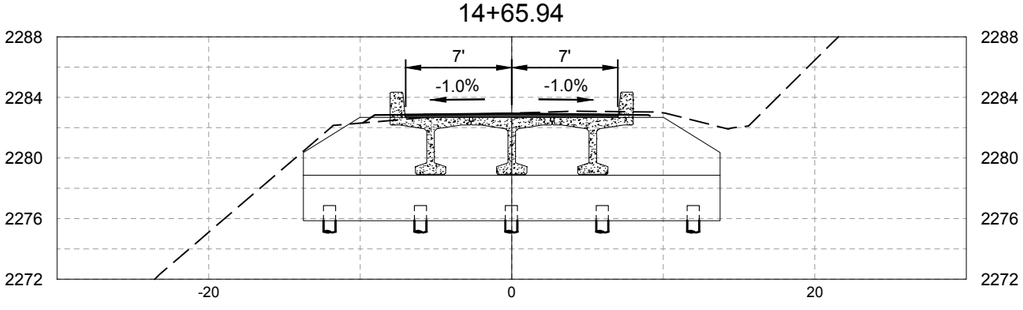

15+03.86

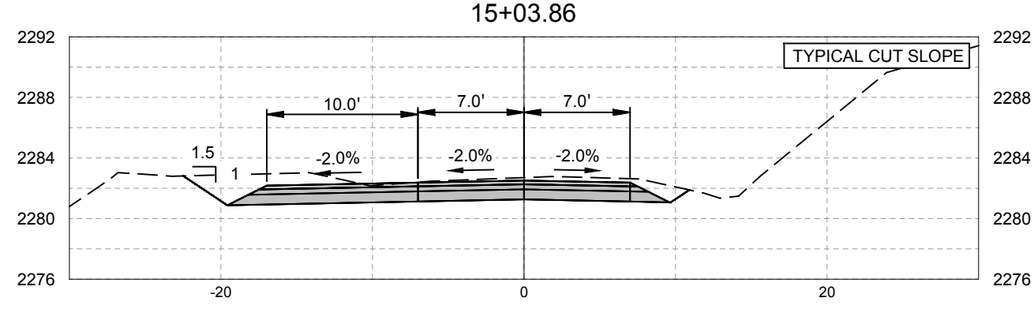

13+60.94

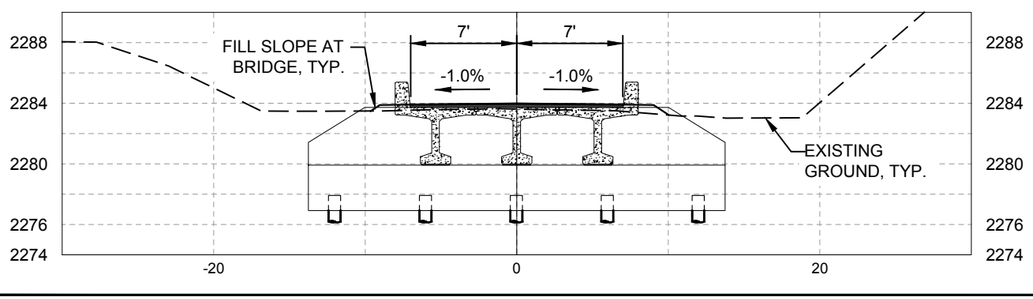

15+00.00

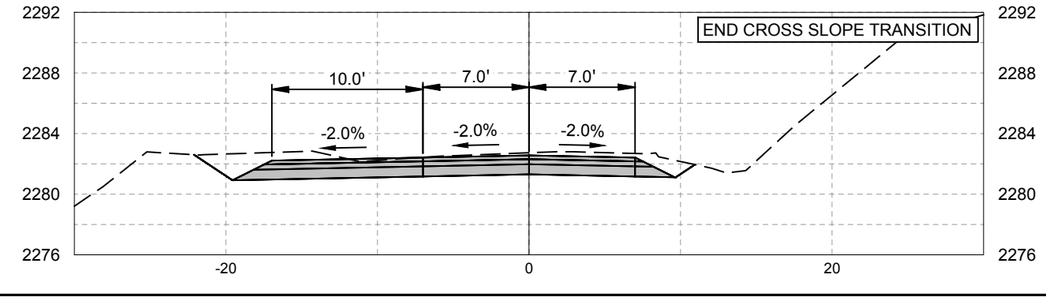

LODGEPOLE CREEK
ROAD BRIDGE DESIGN
ROAD CROSS SECTIONS

PREPARED BY :

SHEET XS3 OF XS3

15+80.00

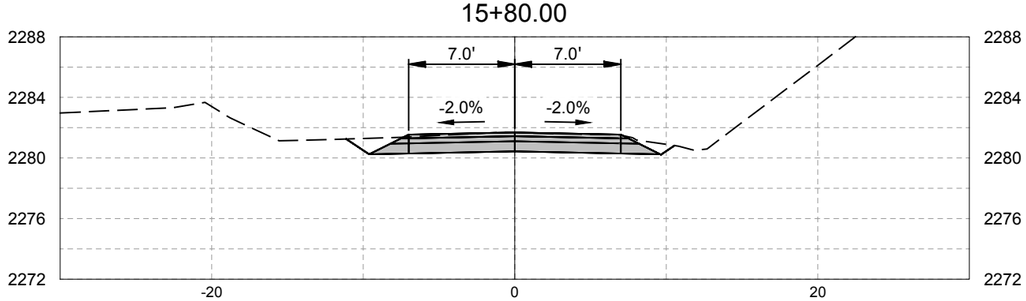
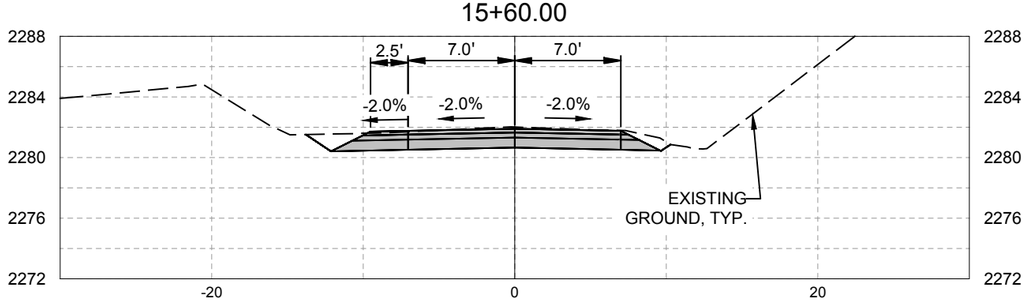
15+60.00