SUBMITTED TO:
DJ&A, P.C.
2000 Maple Street
Missoula, MT 59808

BY:
Shannon & Wilson, Inc.
5900 W 38th Avene
Wheat Ridge, CO 80212

(303) 825-3800
www.shannonwilson.com

GEOTECHNICAL REPORT

USFS Lodgepole and Lower Ninemile Bridge Designs

CHELAN COUNTY, WASHINGTON

SHANNON & WILSON

December 2025

Shannon & Wilson No: 113461-001

PAGE INTENTIONALLY LEFT BLANK FOR DOUBLE-SIDED PRINTING

Submitted To: DJ&A, P.C.
2000 Maple Street
Missoula, MT 59808
Attn: Ammon Groesbeck, PE

Subject: GEOTECHNICAL REPORT, USFS LODGEPOLE AND LOWER NINEMILE BRIDGE DESIGNS, CHELAN COUNTY, WASHINGTON

We are pleased to submit our Geotechnical Report for the above-referenced project. The enclosed report summarizes the subsurface conditions encountered in our exploration program, laboratory test results, and geotechnical engineering recommendations for the proposed project.

Shannon & Wilson participated in this project as a subconsultant to DJ&A, P.C (DJ&A). Our scope of services for the Project was specified in our Professional Services Agreement with DJ&A, dated November 5, 2024.

We appreciate the opportunity to be of service to you on this project. If you have questions concerning this report, or we may be of further service, please contact us.

Sincerely,

SHANNON & WILSON

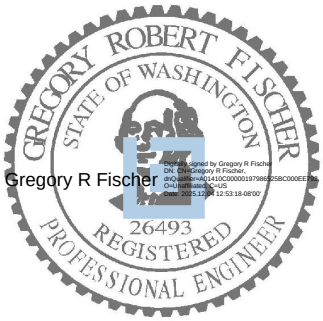

Gregory R Fischer

Walter J. Zitz
Senior Geotechnical Staff

Gregory R. Fischer, P.E., PhD
President

BWV:WJZ/jma/azp

CONTENTS

1 Introduction 1
2 Site and Project Description 1
3 Field Explorations and Laboratory Testing 4
4 Regional Geology and Subsurface Conditions 4
4.1 Regional Geology 4
4.2 Subsurface Conditions 4
4.2.1 Asphalt/Base Course 5
4.2.2 Overburden Soils 5
4.2.3 Bedrock 6
4.2.4 Groundwater 6
4.3 Subsurface Variation 7
5 Geologic Hazards 7
5.1 Corrosion Potential 7
5.2 Seismic Hazards 8
6 Geotechnical Recommendations 8
6.1 Seismic Ground Motion Design Parameters 8
6.2 Foundation Recommendations 9
6.2.1 Micropiles 10
6.2.1.1 Axial Resistance 10
6.2.1.2 Lateral Resistance 11
6.2.2 Shallow Spread Footings 12
6.2.2.1 Bearing Resistance 12
6.2.2.2 Lateral Resistance 12
6.3 Lateral Earth Pressures 12
6.4 Drainage 13
6.5 Permanent Slopes 14
7 Construction Considerations 14
7.1 Micropile Installation 15
7.2 Earthwork 15
7.2.1 Excavation Potential 15

CONTENTS

7.2.2 Foundation and Subgrade Preparation for Shallow Foundations 15
7.2.3 Fill Placement and Compaction 16
7.3 Temporary Slopes 17
7.4 Dewatering 17
8 Document Review and Construction Observation 18
9 Limitations 18
10 References 20

Exhibits

Exhibit 2-1: Site conditions at the Lodgepole Creek crossing in June 2025. 2
Exhibit 2-2: Site conditions at the Lower Ninemile Creek crossing in May 2025 2
Exhibit 4-1: Summary of Pavement Section Thicknesses 5
Exhibit 4-2: Summary of Groundwater Depths During Drilling 6
Exhibit 5-1: Corrosion Testing Results 7
Exhibit 5-2: Corrosivity Ratings Based on Water Soluble Sulfate Exposure 8
Exhibit 6-1: Seismic Design Ground Motion Parameters 9
Exhibit 6-2: Recommended Nominal Lateral Earth Pressure Parameters 13

Tables

Table 1: Deep Foundation Design Parameters

Figures

Figure 1: Vicinity Map
Figure 2: Site and Exploration Plan
Figure 3: Recommended Surcharge Loading for Temporary and Permanent Walls
Figure 4: Recommended P-Multipliers for Horizontally Loaded Pile Groups

Appendices

Appendix A: Subsurface Explorations
Appendix B: Laboratory Test Results
Important Information

1 INTRODUCTION

This report summarizes subsurface conditions and provides geotechnical engineering recommendations for two new bridges along Forest Service Road (FSR) 6500 over Lodgepole Creek and Ninemile Creek (the Project) at the approximate locations shown on Figures 1 and 2. Our services were conducted in general accordance with our subconsultant agreement with DJ&A dated November 5, 2024.

Our scope of services included:

- Coordinating a subsurface exploration program (which included observing and logging four geotechnical borings), clearing underground utilities, coordinating a drilling subcontractor, and measuring groundwater levels.
- Performing geotechnical laboratory testing on selected samples retrieved from the borings.
- Developing geotechnical recommendations for bridge foundations and associated wing walls.
- Providing construction considerations, including earthwork, site grading, and foundation installation.
- Preparing this Geotechnical Report.

The scope of our services did not include evaluating the presence of cultural resources or potentially contaminated soils at or around the site. If a service is not specifically indicated in this report, do not assume it was performed.

2 SITE AND PROJECT DESCRIPTION

The Project is located in the Wenatchee River Ranger District of the Okanogan-Wenatchee National Forest in Chelan County, Washington and includes the removal of two existing drainage culverts and replacement with single span bridges along FSR 6500 at the Lodgepole Creek crossing and the Lower Ninemile Creek crossing (see Figures 1 and 2). The Upper Ninemile Creek crossing, along the FSR 6503-200 spur, is not included in the Project. FSR 6500 is a narrow, asphalt paved roadway which carries two-way traffic. Exhibit 2-1 shows the site conditions at the existing Lodgepole Creek crossing at the time of our subsurface exploration and Exhibit 2-2 shows site conditions at the existing Lower Ninemile Creek crossing at the time of our site reconnaissance.

Exhibit 2-1: Site conditions at the Lodgepole Creek crossing in June 2025 (view approximately east).

Exhibit 2-2: Site conditions at the Lower Ninemile Creek crossing in May 2025 (view approximately northeast).

Based on information provided by the U.S. Forest Service (USFS), the existing culverts at the Lower Ninemile Creek crossing and the Lodgepole Creek crossing have recently been filling with sediment during spring runoff and major rainfall events, originating from burn scars uphill of the Project, attributed to 2022 forest fires. A debris flow in May 2023 completely buried the inlet of the corrugated metal pipe (CMP) culvert at the Lodgepole Creek crossing, causing drainage issues resulting in the roadway being overtopped and contributing to significant erosion of the roadway embankment (Exhibit 2-1), resulting in the closure of this section of FSR 6500.

The Lower Ninemile Creek crossing also experienced a debris flow in May 2023, depositing soil with cobbles and boulders material over the roadway and blocking the inlet and outlet of the existing bottomless arch culvert. We understand that the USFS was able to clear debris from the roadway and reestablish some surface water drainage via the roadside ditch and existing culvert, but the debris flow has continued with subsequent storms. We understand that the USFS maintains this portion of FSR 6500, clearing debris from the roadway after debris flow incidents. During our field exploration program, surface water was observed to flow from the Ninemile Creek, southwest through the roadside ditch to the next culvert below the roadway, and very little to no water was observed flowing from the downstream outlet of the culvert at the Ninemile Creek crossing. A bedrock outcrop was observed on the north side of the roadway near the proposed west abutment location. At the time of our field work, it was difficult to discern the original channel depths below the roadways due to surface disturbance (erosion and/or debris deposition); however, we estimate that the channel at the Ninemile Creek crossing was approximately 3 feet below the roadway, and the channel at the Lodgepole Creek crossing was approximately 8 feet below the roadway.

Based on bridge general layout sheets provided by DJ&A (DJ&A 2025a and 2025b), the Lodgepole Creek Bridge is expected to have a span length of approximately 112 feet and the Lower Ninemile Creek Bridge is expected to have a span length of approximately 80 feet, and these span lengths are intended to allow for debris flows to pass below the roadway. The proposed maximum channel depths are indicated to be approximately 9.3 feet below the roadway grade at the Lower Ninemile Bridge, and approximately 23 feet below the roadway grade at the Lodgepole Bridge. Based on discussions with DJ&A, the bridges will be supported by micropiles or shallow foundations consisting of a precast concrete grade beam on a 6-inch thick geocell layer. Low height wingwalls may be included as part of the Project.

3 FIELD EXPLORATIONS AND LABORATORY TESTING

Shannon & Wilson conducted a field exploration program to explore subsurface conditions at the Project site. The field exploration program consisted of drilling two borings at each structure; borings SW-B1-01 and SW-B1-02 were drilled at the Lodgepole Creek crossing and SW-B2-01 and SW-B2-02 were drilled at the Lower Ninemile Creek crossing. Boring locations are shown on Figure 2.

Appendix A describes the procedures used to complete the drilling and sampling of the geotechnical borings and presents the individual exploration logs and an explanation of the symbols and terminology used on the logs.

Shannon & Wilson completed geotechnical laboratory testing to determine properties of selected samples from the borings. The laboratory program included tests for natural water content, Atterberg limits, grain size distribution, percent fines, point load, and corrosion. The laboratory test results are presented in Appendix B along with a brief discussion of the laboratory testing procedures. The natural water contents, Atterberg limits, percent fines and approximate unconfined compressive strength as determined by point load testing are also indicated on the individual boring logs in Appendix A.

4 REGIONAL GEOLOGY AND SUBSURFACE CONDITIONS

4.1 Regional Geology

Based on a review of the geologic map of the Chelan quadrangle (Tabor and others, 1987) and the geologic map of the Skykomish River quadrangle (Tabor and others, 1993), surficial geology in the Project area consists of quaternary landslide deposits and alpine-glacier deposits overlying Late Cretaceous-aged (approximately 100.5 to 66 million years old) banded gneiss, schist, and amphibolite bedrock. Tabor and others describe the banded gneiss, schist, and amphibolite as interlayered heterogeneous light-colored tonalite to granodiorite gneiss, mica shist, and amphibolite.

4.2 Subsurface Conditions

The below sections present an overview of the subsurface conditions encountered in our borings at each site. Refer to the boring logs for additional detail.

4.2.1 Asphalt/Base Course

The four borings were drilled through the existing roadway surface and encountered a composite pavement section consisting of asphalt pavement overlying a layer of aggregate base course material. The thickness of the pavement sections encountered is summarized in Exhibit 4-1.

Exhibit 4-1: Summary of Pavement Section Thicknesses

Boring No.	Asphalt Thickness (inches)	Base Course Thickness (inches)
SW-B1-01	2	6
SW-B1-02	2	6
SW-B2-01	3.5	6
SW-B2-02	2	6

NOTES:
1 Thicknesses were measured from hole annulus.

4.2.2 Overburden Soils

A layer of artificial fill consisting of silty sand with gravel (SM) with trace charcoal was encountered below the pavement section in boring SW-B2-01 and continued to a depth of approximately 4 feet below the ground surface (bgs). Below the pavement section and fill, all borings (excluding boring SW-B2-02) encountered colluvium consisting of silty sand with gravel and cobbles (SM); silty gravel with sand and cobbles (GM); and poorly graded gravel with silt sand and cobbles (GP-GM). Colluvium extended to depths ranging from 18.5 to 46.5 feet. A boulder was encountered in boring SW-B1-01 from a depth of approximately 2 to 5 feet. Glacial deposits consisting of outwash and till were encountered in the borings underlying the colluvium in all of the borings excluding boring SW-B2-02. Outwash was differentiated from the till based on grain size. Outwash consisted of silty sand (SM) with trace gravel and extended to depths ranging from 19.5 to 48.0 feet. Till was found underlying the outwash and extended to depths ranging from 32.0 to the termination of the boring at the Lodgepole Creek Bridge and to the top of rock at the east abutment of the Lower Ninemile Creek Bridge. Till consisted of silty sand with varying amounts of gravel and cobbles (SM); clayey sand with gravel and trace cobbles (SC); or poorly graded sand with silt and gravel (SP-SM). AASHTO soil classifications for the soil samples tested ranged from A-1-b(0) to A-4(0). Point load tests were conducted on gravel and cobble sized material recovered from sonic core samples of the overburden soils at the Lodgepole Creek Bridge, which indicated approximate compressive strength values ranging from 2,900 to 37,200 pounds per square inch (psi).

4.2.3 Bedrock

Bedrock was encountered in borings SW-B2-01 and SW-B2-02 at depths of 32 and 0.7 feet bgs, respectively, and consisted of extremely weak to very weak micaceous schist banded with 6-inch to 2-foot-thick, strong to very strong marble layers. The upper 11 feet of the bedrock in boring SW-B2-01 and the upper 23 feet of bedrock in boring SW-B2-B2 was completely weathered. As noted on the boring logs, the degree of bedrock weathering was variable, but generally decreased with depth. Photographs of the bedrock sonic core samples from boring SW-B2-01 are included in Appendix A.

Point load tests were conducted on selected samples that were too small for unconfined compression strength (UCS) testing. The point load test results are shown in Table B-2 in Appendix B, and average values are indicated on the boring logs in Appendix A. The point load test results indicate approximate compressive strength values from bedrock ranging from 400 to 35,500 psi.

4.2.4 Groundwater

As indicated in Exhibit 4-2, where encountered, groundwater was measured during drilling at depths between 9 and 25 feet. Groundwater encountered in boring SW-B1-02 was sealed off during drilling, resulting in a dry borehole at the termination of the boring at 71.5 feet. Groundwater measurements were recorded using a drop tape and are also noted on the boring logs included in Appendix A.

Exhibit 4-2: Summary of Groundwater Depths During Drilling

Boring No.	Groundwater Depth (feet)	Groundwater Elevation[1] (feet)	Measurement Date
SW-B1-01	NE	NA	6/11/2025
SW-B1-02	25	2,258	6/10/2025
SW-B2-01	9	2,288	6/13/2025
SW-B2-02	NE	NA	6/12/2025

NOTES:

1 Based on ground surface elevations provided by DJ&A.

NE = Not Encountered, NA = Not Applicable

Groundwater fluctuations are possible and will depend on many factors such as seasonal variations, local precipitation, water levels in Ninemile Creek and Lodgepole creek, and runoff.

4.3 Subsurface Variation

Our observations are specific to the locations, depths, and times noted on the logs and may not be applicable to all areas of the site. No amount of explorations or testing can precisely predict the characteristics, quality, or distribution of subsurface and site conditions. Potential variation includes, but is not limited to:

- The conditions between explorations may be different.
- The passage of time or intervening causes (natural and human-induced) may result in changes to site and subsurface conditions.
- Penetration test results in gravelly soils may be unrealistic. Actual soil density may be lower than estimated if the test was performed on a gravel or cobble.

If conditions that are different from those described herein are encountered during construction, we should be retained to review our description of the subsurface conditions and reconsider our conclusions and recommendations.

5 GEOLOGIC HAZARDS

5.1 Corrosion Potential

To assist in estimating the corrosion potential at the site, selected soil samples were tested for pH, resistivity, water soluble sulfates, and chlorides. The results are presented in Table B-1 in Appendix B and in Exhibit 5-1.

Exhibit 5-1: Corrosion Testing Results

Boring	Sample	USCS	pH	Resistivity (ohm-cm)	Water-Soluble Sulfates (%)	Water-Soluble Chlorides (%)
SW-B1-01	S-3	SM	8.0	6,800	0.11	0.079
SW-B2-02	S-4	SC	7.0	>100,000	<0.01	0.052

NOTES:
Water-soluble sulfate and chloride values are shown as percent weight in dry soil.
ohm-cm = ohm-centimeter, USCS = Unified Soil Classification System (see Log Key in Appendix A for definitions).

Soils with resistivity values less than 2,000 ohm-cm are considered corrosive for pile foundations per AASHTO (2020). The resistivity measured in the samples was 6,800 and >100,000 ohm-centimeters (ohm-cm).

The concentration of water-soluble sulfates measured in the samples was less than 0.01% and 0.11% by weight. Based on classifications as defined by the American Concrete Institute

(ACI) 318-21 (ACI, 2021), as shown in Exhibit 5-2, these test results suggest a negligible to moderate exposure of sulfate attack for concrete exposed to the onsite soils (exposure class S0 to S1).

Exhibit 5-2: Corrosivity Ratings Based on Water Soluble Sulfate Exposure

Water Soluble Sulfate in Soil (Percent by Weight)	Sulfate Severity (Class)
<0.10	Negligible (S0)
0.10 - 0.20	Moderate (S1)
0.20 - 2.00	Severe (S2)
>2.00	Very Severe (S3)

The test results and the above discussion are provided to assist the designer in the selection of project materials, concrete type, or other features with respect to corrosion. As appropriate, the designer should consider protective measures, such as coatings, upsizing for section loss, or using alternative materials to reduce the corrosion potential.

5.2 Seismic Hazards

Based on a geologic map by the United States Geological Survey (USGS), the nearest middle to late Quaternary Age fault to the Project area is the Straight Creek Fault, located approximately 13 miles west of the Project (Lidke, 2009). Based on the location and lack of recent movement of the Straight Creek Fault, it is our opinion that the potential for ground surface fault rupture at the Project site is low.

Liquefaction can occur in loose, saturated, cohesionless soils when subjected to earthquake ground shaking. The typical groundwater level at the proposed bridge locations is expected to coincide with the levels of Lodgepole and Ninemile Creeks. Based on the subsurface conditions encountered in the borings, which were drilled in close proximity to the proposed bridge abutment locations, groundwater was generally within medium dense to very dense silty sand with gravel and cobbles; therefore, it is our opinion that the risk of liquefaction is low.

6 GEOTECHNICAL RECOMMENDATIONS

6.1 Seismic Ground Motion Design Parameters

Using the AASHTO Load and Resistance Factor Design (LRFD) Bridge Design Specifications (AASHTO, 2020) criteria, and based on subsurface conditions encountered in our borings, the Project site classifies as Site Class C or D, depending on the boring

considered. We recommend conservatively assuming Site Class D conditions. If the seismic design is found to significantly affect the design, geophysical testing could be completed at the site to better characterize the seismic site class.

Ground motion parameters were determined for the Project site using the USGS U.S. Seismic Design Map Web Application (USGS, 2025) and procedures recommended by AASHTO (2020). Recommended seismic design ground motion parameters are summarized in Exhibit 6-1.

Exhibit 6-1: Seismic Design Ground Motion Parameters

Design Parameter	Value	
	Lodgepole Creek Bridge	Lower Ninemile Creek Bridge
Peak Ground Acceleration (PGA_B)[1]	0.224 g	0.220 g
Site Class	D	D
Short-period Spectral Acceleration, S_S	0.514 g	0.504 g
Long-period Spectral Acceleration, S_1	0.170 g	0.167 g
Site Factor, F_{PGA}	1.352	1.361
Site Factor, F_a	1.389	1.397
Site Factor, F_V	2.121	2.132
Peak Design Spectral Acceleration, A_S	0.303 g	0.299 g
Short-period Design Spectral Acceleration, S_{DS}	0.714 g	0.704 g
Long-period Design Spectral Acceleration, S_{D1}	0.360 g	0.356 g
T_O	0.101 sec.	0.101 sec.
T_S	0.505 sec.	0.506 sec.
Seismic Zone[2]	3	3

NOTES:

1 PGA_B = peak ground acceleration for a site underlain by Site Class B soil (very dense soil and soft rock).

2 Seismic Zone from AASHTO (2020) Table 3.10.6-1.

g = gravitational acceleration; PGA = peak ground acceleration, sec = second

6.2 Foundation Recommendations

The following sections provide geotechnical recommendations for the Project. As discussed in Section 2.0, we understand the proposed bridges will consist of single-span bridges with span lengths of approximately 105 feet at the Lodgepole Creek crossing and 80 feet at the Lower Ninemile Creek crossing. The following recommendations are based on preliminary information provided by DJ&A. Our recommendations may need to be updated as the design progresses. We have considered deep foundations consisting of micropiles and shallow foundations consisting of a pre-cast concrete grade beam placed on a 6-inch-thick

geocell layer, below the design scour depth, with a minimum horizontal distance from the front face of the grade beam to the channel slope of approximately 8 feet at both the Lodgepole Creek Bridge and Lower Ninemile Creek Bridge.

Driven H-piles were also considered as a deep foundation alternative; however, H-piles may have difficulty being driven to the target depth due to the presence of cobbles and boulders in the overlying colluvium at the Lodgepole Creek Bridge. This may require predrilling or coring an oversized hole to install H-piles to the target depth. Due to the added cost and uncertainty associated with predrilling for H-pile installation, H-piles were not considered the preferred deep foundation alternative.

6.2.1 Micropiles

6.2.1.1 Axial Resistance

The following summarizes our recommendations for the geotechnical design of micropiles to support the abutments. Structural design of the micropiles will be completed by others. Micropiles should be designed in accordance with the FHWA Micropile Design and Construction Manual (Sabatini and others, 2005) and AASHTO (2020). Additional design recommendations for micropiles at the Lodgepole Creek and Lower Ninemile Creek Bridges are provided below:

- Permanent casing should be included within the upper 10 feet of piles below the pile cap. The length of the permanent casing may need to be increased for structural design considerations.
- Micropiles should be designed to develop axial resistance in the medium dense to very dense granular soils at the Lodgepole Creek Bridge. Micropiles at the Lower Ninemile Creek Bridge should be designed to develop axial resistance in the weathered bedrock and schist.
- Axial resistance should be ignored along the cased section of the micropile.
- The axial capacity of the micropiles can be designed based on the nominal grout bond strengths provided in Table 1. The Contractor should be responsible for determining the appropriate construction method to achieve these bond strengths.
- The minimum bond length (below the bottom of casing) should be 10 feet.
- AASHTO (2020) specifies a minimum center-to-center spacing of 30 inches or 3 pile diameters, whichever is greater.
- AASHTO (2020) recommends a strength limit resistance factor of 0.55, an extreme event resistance factor of 1.0 for compression and 0.80 for uplift, and a service limit resistance factor of 1.0 on the bond strength. A strength limit resistance factor of 0.7 for nominal bond strength in compression and uplift may be used if sacrificial (verification) load testing is completed at each bridge, as discussed below.

- Corrosion protection is required for the reinforcing center bar according to the FHWA Micropile Design and Construction Manual (Sabatini and others, 2005). The corrosion protection should include grout cover. In addition, because of the permanent nature of the micropiles, we recommend one of the following: epoxy coating, galvanization, or encapsulation.
- Corrosion protection for permanent casing should include a sacrificial steel section loss of 0.063 inches, in accordance with the FHWA Micropile Design and Construction Manual (Sabatini and others, 2005).
- Total settlement of individual micropiles is anticipated to be less than ½ inch. Differential settlement between adjacent micropiles would be expected to be about 50 to 75% of this value. This assumes the micropiles are constructed using good installation techniques and equipment based on criteria described in the FHWA Micropile Design and Construction Manual (Sabatini and others, 2005).
- To verify the assumed bond strength used for design, one sacrificial (verification) load test should be completed at each bridge in accordance with the FHWA Micropile Design and Construction Manual (Sabatini and others, 2005). The verification load test can be conducted in either tension or compression. The micropiles used for the verification tests should be loaded to at least 2.0 times the design load.
- At least one production proof tests should be completed at each substructure unit. The micropiles used for proof testing should be loaded to 1.6 times the design load. The micropiles tested may be incorporated as production micropiles, provided the proof tests satisfy the testing requirements.

6.2.1.2 Lateral Resistance

To determine the lateral load capacity of an individual micropile, and the deflection, shear, and moment along the pile, we have provided input parameters for the commercial software LPILE by Ensoft, Inc. (2022). LRFD design methods for lateral loading of piles utilize a resistance factor of 1.0 and are controlled by allowable deflection criteria. Geotechnical parameters required for input into LPILE for an individual pile are presented in Table 1. If groups of piles are used, the effects of group interaction should be considered when evaluating the horizontal load-deflection behavior. When using the P-Y method of analysis, the values of P (load) should be factored appropriately to account for the group effects. Recommended values of P-multipliers for loading perpendicular and parallel to a line of piles are provided on Figure 4.

Because of the relatively small diameter of the micropiles, the lateral resistance is relatively minor and battered piles may be required to provide lateral resistance. If battered piles are utilized, the structural designer should confirm that the stiffer lateral response generated by battered piles is acceptable.

6.2.2 Shallow Spread Footings

6.2.2.1 Bearing Resistance

For shallow foundations supported by a 6-inch-thick geocell mat, overlying medium dense to very dense sand and gravel or completely weathered bedrock, we recommend a nominal bearing resistance of 9,300 pounds per square foot (psf) for the Lodgepole Creek Bridge, and a nominal bearing resistance of 9,800 psf for the Lower Ninemile Creek Bridge. For these nominal values, we recommend the upper 2 feet of the foundation subgrade below the geocell mat be removed and replaced with Granular Fill, meeting the requirements in Section 7.2.3. The recommended nominal bearing resistance values have been reduced to consider the proximity to the adjacent channel slopes. A resistance factor of 0.45 should be applied to the nominal bearing resistance values. Based on the recommended bearing pressures above, we estimate foundation settlements would be on the order of 1 inch with differential settlement of about 1 inch between the bridge abutments. We recommend a minimum footing width of 3 feet and a minimum embedment distance of 1.5 feet from the closest graded surface.

6.2.2.2 Lateral Resistance

Lateral loads can be resisted by friction along the base of a shallow foundation. Precast footings may be designed using a nominal coefficient of sliding resistance of 0.8 and a resistance factor of 0.9 should be applied to the nominal value.

Passive earth pressure can also be provided. A resistance factor of 0.5 should be applied to the nominal passive resistance value provided in Exhibit 6-2. Because of the potential for scour, frost, or other disturbance of near-surface soils, passive resistance should be ignored in the upper 30 inches; however, the equivalent fluid pressure line may be project down from the ground surface. Because of the proximity of the foundation to the creek side slopes, we do not recommend using passive earth pressure in the direction toward the creek.

6.3 Lateral Earth Pressures

The lateral earth pressures acting on structure walls depend on many factors, including surcharge loads, the soil type/consistency, and whether the top of the wall is free to yield or deflect laterally during and after excavation. If the top of the wall is free to yield a minimum of 0.1% of the wall height (i.e., 0.001 times the height), the soil pressures will generally be less (i.e., active condition) than if the wall is not able to yield this amount due to stiffness or resistance of the wall (i.e., at-rest condition). We anticipate that at-rest earth pressures will be appropriate for the structures. Our static earth pressure recommendations

are presented in Exhibit 6-2. The static lateral earth pressures assume the structure walls are backfilled with properly compacted Granular Fill material in a 1H:1V zone extending upward from the base of the structure from a point 1.5 feet behind the edge of the foundation. These pressures also assume a vertical wall face and a flat backslope. Clay, cobbles, and boulders are not suitable for reuse as backfill. We anticipate that the onsite sand and gravel would be suitable for reuse as backfill for structures if cobbles and boulders encountered are screened out.

Seismic active lateral earth pressure coefficients were determined based on the Mononabe-Okabe method (AASHTO, 2020), and seismic at-rest earth pressure coefficients were determined based on methods developed by Zhang and others (1998). Per AASHTO (2020), the pressure distribution shape for dynamic active earth pressures is triangular, with the resultant force (PAE) acting at the lower third of the wall height. The parameters are provided in Exhibit 6-2.

Exhibit 6-2: Recommended Nominal Lateral Earth Pressure Parameters

Design Parameter	Coefficient	Nominal Equivalent Fluid Pressure[1] (pcf)	
		Above Groundwater	Below Groundwater
Static At-Rest Earth Pressure	$K_o = 0.44$	60	94[2]
Static Active Earth Pressure	$K_a = 0.28$	38	83[2]
Static Passive Earth Pressure	$K_p = 3.7$	505	331
Seismic At-Rest Earth Pressure	$K_{oe} = 0.66$	89	110[2]
Seismic Active Earth Pressure	$K_{ae} = 0.50$	67	98[2]

NOTE:

1 Based on granular soil with an assumed moist unit weight of 135 pcf and a friction angle of 34 degrees for the retained soil.

2 Includes the combined hydrostatic pressure and equivalent fluid pressure.

pcf = pounds per cubic foot

Surcharge loads, such as traffic and construction equipment, will induce lateral loads on walls. The pressures provided above do not account for surcharge loads. Lateral loads due to various types of surcharges may be calculated by using the loading diagrams provided in Figure 3 and the earth pressure coefficient indicated above in Exhibit 6-2.

6.4 Drainage

Fluctuations of water levels in Lodgepole and Ninemile Creeks could potentially result in differential hydrostatic water pressures in wall backfill (i.e., water levels in the backfill may rise with the water level in the creek and then remain elevated after the creek level decreases, depending on wall drainage measures and the duration of elevated water levels

in the creek). The earth pressure parameters provided in Exhibit 6-2 assume that unbalanced hydrostatic pressures do not develop in the retained zone behind walls.

In general, materials with greater than about 3% fines content are not considered free draining. Granular Fill (Section 7.2.3) may not be free draining; therefore, a rapid drawdown condition could occur following flood events, i.e., water could be trapped in the backfill after flood waters recede. This condition could be addressed by designing the wall for appropriate water pressures or by including internal drainage features to reduce the potential for water to accumulate in the backfill. Appropriate drainage features could include:

- Placement of a 12-inch-thick drainage layer behind the walls with a suitable discharge system (e.g., weep holes or a perforated collector pipe, daylighting to a suitable discharge point). Gravel backfill within the drainage layer should meet the requirements of Division 9-03.12(4) Gravel Backfill for Drains of the Washington State Department of Transportation (WSDOT) Standard Specifications for Road, Bridge, and Municipal Construction M41-10, 2025 (WSDOT, 2025).
- Limiting the maximum fines content of the Granular Fill to 3%.

6.5 Permanent Slopes

Based on the general layout sheet for the Lodgepole Creek Bridge (DJ&A, 2025b), we anticipate a maximum cut depth of approximately 23 feet for the Lodgepole Creek channel at the bridge crossing, with permanent channel slopes of 1.5H:1V (horizontal to vertical) with riprap slope protection along the lower 10 feet of the channel slopes, and 2H:1V for the upper portion of the channel slope, with no riprap slope protection.

We recommend that all proposed slopes be protected from erosion; therefore, above the riprap, the soil slope should be seeded and/or planted with relatively fast-growing vegetation to reduce the potential for surface sloughing and erosion. Natural or geosynthetic erosion control blankets may be necessary to assist in erosion protection during vegetation growth.

7 CONSTRUCTION CONSIDERATIONS

The applicability of the design recommendations provided in this report is contingent on good construction practice. Poor construction techniques may alter conditions from those on which our recommendations are based and may result in reduced performance. Based on discussions with DJ&A, we understand the Federal Standard Specifications FP-24 (FHWA, 2024) will be used on this project. The following sections present additional construction and material considerations for this project.

7.1 Micropile Installation

Micropiles should be constructed in accordance with our recommendations, the guidelines in Section 567 of FP-24 (FHWA, 2024), and the FHWA Reference Manual, "Micropile Design and Construction" (Sabatini and others, 2005).

The drilling and grouting process should be relatively continuous with minimal stoppage of work between the completion of drilling and cleaning of hole and placement of grout after setting the reinforcing bar, and under no circumstances after the day of drilling. We anticipate that the micropiles will be constructed below the groundwater table and that the grout should be placed using a tremie tube. Due to the presence of granular soils and the presence of water in the subsurface, the Contractor should be prepared to encounter flowing conditions in the overburden.

We recommend that micropile contractors who participate on this project be required to demonstrate that they have suitable equipment for this project and adequate experience in construction with similar subsurface conditions.

7.2 Earthwork

Earthwork, including site preparation, embankment construction, placement of fill, and subgrade preparation, should conform to the requirements provided in Division 200 of the Standard Specifications for Construction of Roads and Bridges on Federal Highway Projects, FP-24 (2024).

7.2.1 Excavation Potential

We anticipate that excavation for the proposed construction will occur in the existing fill and overburden soils. We anticipate that excavation of the overburden soil and weathered bedrock can be accomplished using conventional excavating equipment, such as a dozers, rubber-tired backhoes or tracked hydraulic excavators; however, progress will be slower if bands of higher strength bedrock are encountered in the excavation. Boulders and cobbles may also be encountered within the overburden soils, and may be difficult to remove with conventional equipment depending on boulder size.

7.2.2 Foundation and Subgrade Preparation for Shallow Foundations

Proper subgrade preparation is required for adequate performance of shallow foundations. If shallow foundations are used, subgrade excavations should be cleaned of all artificial fill, debris, or loose/soft material; approved by visual observation by a qualified geotechnical engineer prior to fill placement; and kept free of water at all times. Boring SW-B2-01 at the west abutment of the Lower Ninemile Creek bridge, encountered a layer of artificial fill

extending to 4 feet bgs, so we recommend over-excavating down to the medium dense to very dense native sands layer and backfilling with compacted Granular Fill to the base of the geocell layer. To provide more uniform foundation support, we recommend that this overexcavation and replacement be conducted at the east abutment as well, where completely weathered bedrock was encountered below the pavement section.

Prior to placing new fill materials, exposed subgrades should be stripped, scarified to a depth of 12 inches, moisture conditioned, and compacted in place to a dense and unyielding condition per the requirements described in Section 204 and 208 of FP-24 (2024). The compacted surface should be proof-rolled with a fully loaded, tandem-axle, 10-yard dump truck or equivalent. If it is not possible to perform a proof-roll, the subgrade should be probed and accepted by an experienced geotechnical engineer or materials testing technician. Areas that are identified as being loose, soft, or yielding during proof-rolling and/or probing should be removed, reconditioned and recompacted. Care should be taken during proof-rolling and subgrade preparation to avoid disturbing subgrade soils and supporting soils that will remain in place, as they can rut and pump under repeated construction traffic.

7.2.3 Fill Placement and Compaction

Granular Fill should consist of native or imported well-graded sand and gravel with less than 20% fines (material passing the U.S. Standard No. 200 sieve),a maximum particle size of 3 inches, and a maximum plasticity index (PI) of 10. Based on our laboratory testing, the onsite soils test results provided in Appendix B, suitable granular fill may be found onsite.

Fill materials should be placed in horizontal lifts, with the loose lift thickness not to exceed 12 inches for heavy equipment compactors and 6 inches for hand-operated compactors. Compaction of backfill adjacent to walls can result in higher lateral earth pressures against the wall. As such, small equipment that is hand-operated should only be used within a line extending upward from the base of the structure at 0.5H:1V, or at least 3 feet from the wall, whichever is greater. Unless the structural engineer indicates differently, we recommend that backfill around structures be brought up in uniform horizontal layers and not be unbalanced around the structure.

All fill materials should be compacted to a dense/firm and unyielding condition. Granular Fill should be compacted to a minimum of 95% of its Modified Proctor maximum dry density (AASHTO T180). The moisture content of Granular Fill should be within ± 3% of the optimum moisture content.

7.3 Temporary Slopes

We anticipate that the roadway will be closed to through traffic during construction and temporary excavations will be made to construct the Project (i.e., shoring will not be required). Temporary excavations should be sloped, as needed, to provide a safe, stable slope. Consistent with conventional construction practice, the Contractor should be responsible for temporary excavation slopes.

We recommend the temporary slopes be consistent with the Occupational Safety & Health Administration (OSHA) guidelines contained in 29 CFR 1926, Subpart P (1989). For cost estimating and planning purposes only, we recommend assuming temporary excavations above groundwater level are sloped at 1.5H:1V in granular soils, consistent with OSHA Type C soils. If groundwater is actively seeping into the excavation, flatter slopes will be required. The Contractor should continually classify the soils that are encountered as excavation progresses with respect to the OSHA system.

Consistent with conventional practice, the contract documents should require the Contractor to be responsible for the actual temporary excavation slopes, including methods, sequence, and schedule of construction. The Contractor is able to observe the nature and conditions of the subsurface materials encountered and should evaluate the factors discussed above. If instability is observed, slopes should be flattened or shored. All excavations should be accomplished in accordance with local, state, and federal safety regulations.

7.4 Dewatering

Based on the groundwater levels encountered in our explorations, excavations for foundations, abutments, and wing walls are not expected to extend below groundwater. However, for excavations that extend near or below the Lodgepole and Ninemile Creek channel levels, the presence of groundwater may cause instability of open-cut excavations and subgrades. Groundwater levels will likely be influenced by the stages and seasonal changes of Lodgepole and Ninemile Creeks. The Contractor should consider these seasonal conditions in planning the work and the groundwater control measures.

We recommend that the groundwater level be kept a minimum of 3 feet below the bottom of the excavation elevation to reduce the potential for disturbance to the subgrade. The groundwater level should be drawn down prior to excavating and should be maintained in a dewatered state until the abutments and wing walls are constructed and backfilled.

Consistent with typical practice, the Contractor will be responsible for control of surface water and groundwater during construction, including the design of dewatering and

diversion features. In this regard, slope protection, ditching, sumps, dewatering wells, diversions, and other measures should be employed as necessary, to direct water away from excavations, to prevent ponding of water next to the work zone, and to permit completion of the work.

8 DOCUMENT REVIEW AND CONSTRUCTION OBSERVATION

We recommend that we be retained to review the geotechnical portions of the plans and specifications to determine if they are consistent with our recommendations. In addition, because geotechnical design recommendations are developed from a limited number of explorations and tests, recommendations may need to be adjusted in the field. To this extent, we recommend that Shannon & Wilson be retained to monitor the geotechnical aspects of construction, particularly foundation installation, subgrade preparation, fill placement, and compaction. This monitoring would allow us to confirm that conditions encountered are consistent with those indicated by the explorations and provide expedient recommendations should conditions be revealed during construction that are different from those anticipated.

9 LIMITATIONS

This report was prepared for the exclusive use of DJ&A and the USFS for use in design of the Lodgepole Creek and Lower Ninemile Creek Bridge Designs project. It should be made available to prospective contractors and/or the Contractor for information on factual data only, and not as a warranty of subsurface conditions.

This report should not be used without our approval if any of the following occurs:

- Conditions change due to natural forces or human activity under, at, or adjacent to the site.
- Assumptions stated in this report have changed.
- Project details change or new information becomes available such that our analyses, conclusions, and recommendations may be affected.
- If the site ownership or land use has changed.
- More than 5 years has passed since the date of this report.

If any of these occur, we should be retained to review the applicability of our analyses, conclusions, and recommendations.

Unanticipated soil conditions are commonly encountered and cannot be fully determined by a limited subsurface exploration and laboratory testing program. Such unexpected conditions frequently require that additional expenditures be made to attain a properly constructed project. Therefore, some contingency fund is recommended to accommodate such potential extra costs.

Within the limitations of scope, schedule and budget, the analyses, conclusions and recommendations presented in this report were prepared in accordance with generally accepted professional geotechnical and geological principles and practice in this area at the time this report was prepared. We make no other warranty, either express or implied.

Shannon & Wilson has prepared the attached document, "Important Information about Your Geotechnical Report," to assist you and others in understanding the use and limitations of our reports.

10 REFERENCES

American Association of State Highway and Transportation Officials. (2020). *AASHTO LRFD bridge design specifications, customary U.S. units* (9th ed.). American Association of State Highway and Transportation Officials.

American Concrete Institute. (2021). *Building code requirements for structural concrete and commentary* (ACI 318-21) Farmington Hills, Michigan. American Concrete Institute.

DJ&A. (2025a, March). DJ&A. (2025b, August). *Bridge general layout, Lodgepole Creek Bridge design, RD 6500000 MP 8.63, Structure No. 061707000037203, Okanogan-Wenatchee National Forest, Wenatchee River Ranger District, drawing sheet No. 6 (Sheet 6 of 21).*

Ensoft, Inc. (2022). *User's manual for LPILE 2022: A program to analyze deep foundations under lateral loading.* Ensoft, Inc.

Lidke, D. J. (Compiler). (2009). *Fault No. 553, Straight Creek Fault*. In *Quaternary fault and fold database of the United States*. U.S. Geological Survey. https://earthquake.usgs.gov/hazards/qfaults/

Occupational Safety and Health Administration. (1989). *29 CFR Part 1926, Subpart P: Excavations.* U.S. Department of Labor.

Sabatini, P. J., et al. (2005). *Micropile design and construction (FHWA NHI-05-039, Course No. 1320789).* Federal Highway Administration; National Highway Institute.

Tabor, R. W., Frizzell, V. A., Whetten, J. T., Waitt, R. B., Swanson, D. A., Byerly, G. R., Booth, D. B., Hetherington, M. J., & Zartman, R. E. (1987). *Geologic map of the Chelan 30-minute by 60-minute quadrangle, Washington (Miscellaneous Investigations Series Map I-1661, scale 1:100,000).* U.S. Geological Survey.

Tabor, R. W., Frizzell, V. A., Booth, D. B., Waitt, R. B., Whetten, J. T., & Zartman, R. E. (1993). *Geologic map of the Skykomish River 30 × 60 minute quadrangle, Washington (Miscellaneous Investigations Series Map I-1963, scale 1:100,000).* U.S. Geological Survey.

Federal Highway Administration. (2024). *Federal standard specifications for construction of roads and bridges on Federal Highway projects (FP-24 English Units).* U.S. Department of Transportation and Federal Highway Administration. http://flh.fhwa.dot.gov/resources/pse/specs/.

United States Geological Survey. (2025). *U.S. seismic design maps web application*. U.S. Geological Survey. https://earthquake.usgs.gov/ws/designmaps/

Washington State Department of Transportation. (2025). *Standard specifications for road, bridge, and municipal construction (M 41-10).* Washington State Department of Transportation. https://wsdot.wa.gov/publications/manuals/fulltext/M41-10/SS2025.pdf

Zhang, J.-M., Shamato, Y., & Tokimatsu, K. (1998). Seismic earth pressure theory for retaining walls under any lateral displacement. *Soils and Foundations, 38*(2), 143–163. https://doi.org/10.3208/sandf.38.2_143

Table 1 - Deep Foundation Design Parameters

Structure	Location and Representative Borings	Elevation (feet) Top	Elevation (feet) Bottom	Interpreted Groundwater Elevation[3]	Generalized Soil/Rock Description	Micropile[1,2] Nominal Side Resistance (ksf)	p-y Curve	LPILE Parameters[4,5,6] Effective Unit Weight γ (pcf)	Peak Friction Angle ϕ' (deg)	Undrained Cohesion s_u (psf)
Lodgepole Creek Bridge	Both Abutments *(based on SW-B1-01 & SW-B1-02)*	2,283	2,266	2,266	Medium dense to very dense, silty SAND with gravel and cobbles	3.0	Sand (Reese)	125	37	-
		2,266	2,212					63	37	-
Lower Ninemile Creek Bridge	East Abutment *(based on SW-B2-01)*	2,297	2,294	2,294	Medium dense to very dense, silty SAND with gravel and cobbles	-	Sand (Reese)	125	35	-
		2,294	2,277					63	35	-
		2,277	2,265		Dense to very dense, silty SAND with gravel	-	Sand (Reese)	63	37	-
		2,265	2,254		Medium dense to dense, clayey SAND (Residuum)	2.5	Sand (Reese)	73	35	-
		2,254	2,227		SCHIST: extremely weak to very weak, slightly weathered to fresh	8.0	Stiff Clay w/o free water	78	-	4,000
	West Abutment *(based on SW-B2-02)*	2,296	2,294	2,294	Loose to very dense, clayey SAND (Residuum)	2.5	Sand (Reese)	130	35	-
		2,294	2,273					68	35	-
		2,273	2,258		SCHIST: extremely weak to very weak, slightly weathered to fresh	8.0	Stiff Clay w/o free water	78	-	6,000

NOTES:

1 The factored micropile side resistance should be determined by multiplying the nominal side resistance by the bearing material side resistance surface area (below the casing), and the specified resistance factor. Axial resistance in the overburden has been ignored at the east abutment of the Lower Ninemile Bridge due to strain compatibility between the overburden soils and bedrock.

2 The nominal side resistance values are based on a single pile and do not consider group action of closely spaced piles (closer than 30 inches or 3 daimeters, center-to-center).

3 Interpreted groundwater elevation was rounded up to the nearest foot corresponding to the Lodgepole Creek and Ninemile Creeks 100-year water surface elevations.

4 The LPILE parameters are for a horizontal ground surface on the side of the foundation resisting lateral loading. Sloping ground surface modifications should be included as per Ensoft, Inc.'s recommendations for the LPILE program as necessary.

5 We recommend utilizing the Ensoft default values for ε_{50} and initial p-y modulus (k) in LPILE. The default values may be utilized by entering "0" in the input field in the program.

6 Adjustments to the design parameters may be required to account for elevation changes due to final grading, for the inclusion of additional materials at the abutments, or scour.

deg = degrees; ksf = kips per square foot; pcf = pounds per cubic foot; psf = pounds per square foot

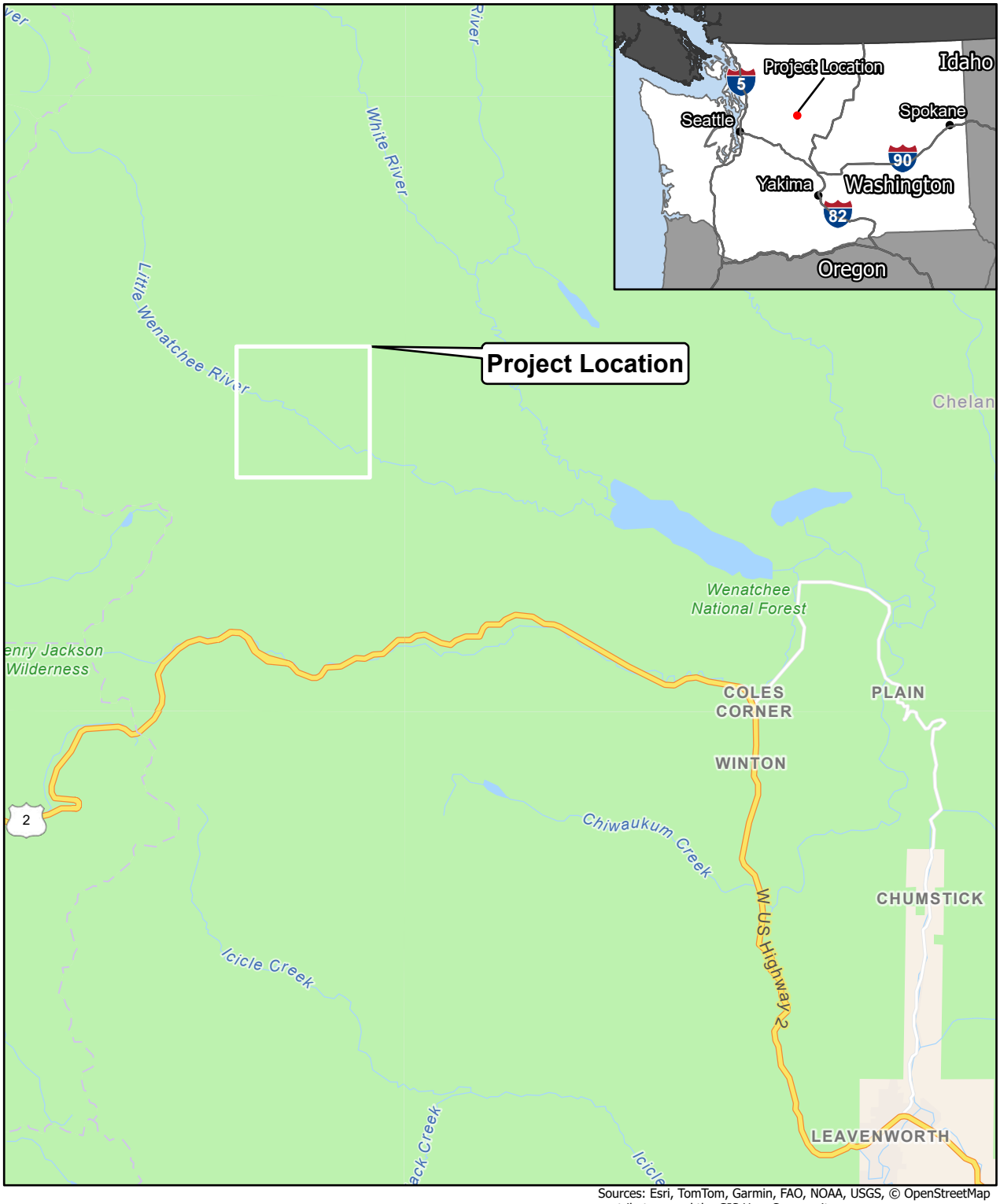

Sources: Esri, TomTom, Garmin, FAO, NOAA, USGS, © OpenStreetMap contributors, and the GIS User Community

0 4 8
Miles

N

USFS Lodgepole and Lower Ninemile Bridge Designs
Chelan County, Washington

VICINITY MAP

December 2025 113461-001

SHANNON & WILSON

FIG. 1

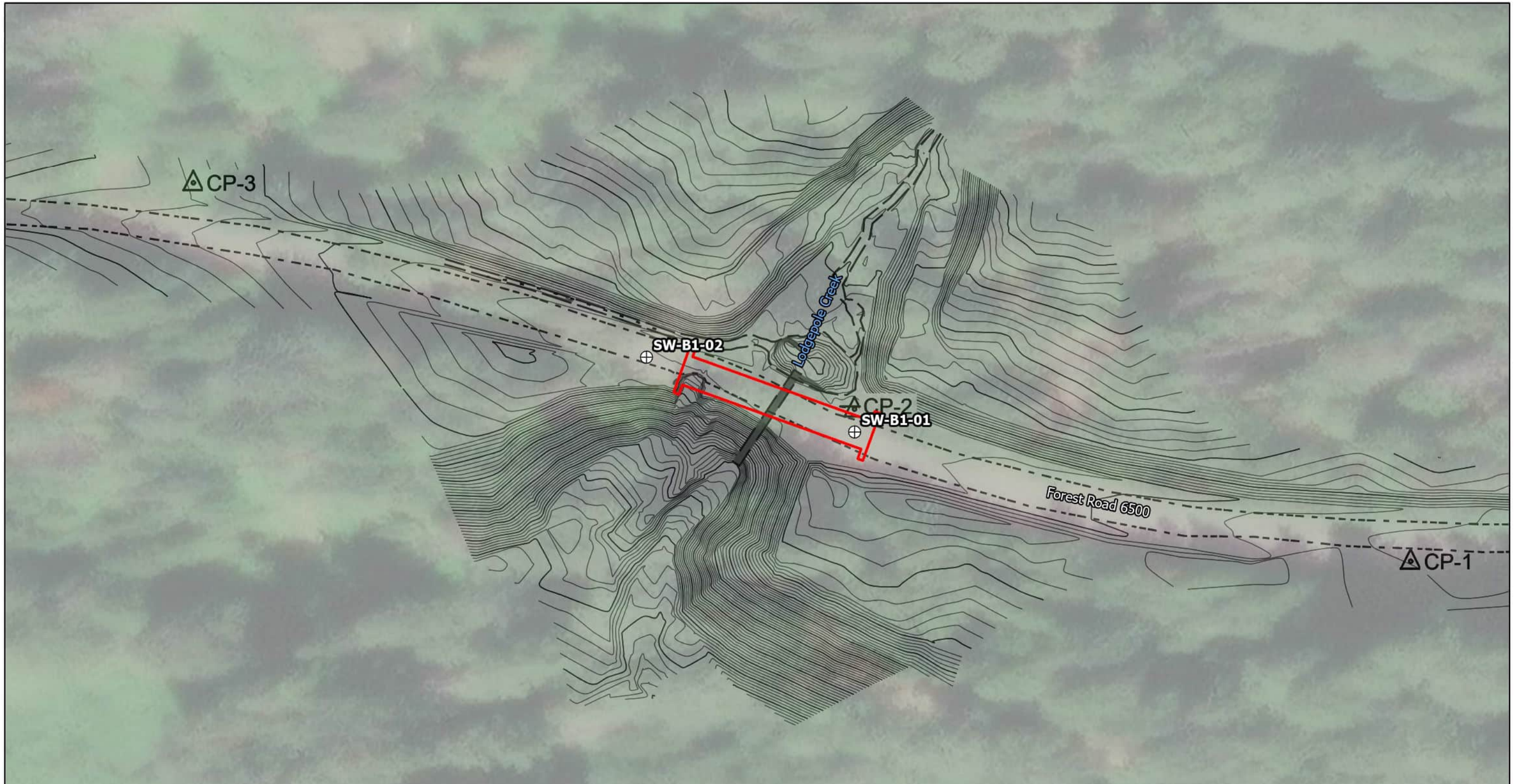

LEGEND

⊕ Approximate Boring Location and Designation

Proposed Bridge Location

NOTES

1. Map overlay from DJ&A "Lodgepole Creek Road Bridge Design,30% Draft Plans, Sheet 2."
2. Proposed bridge locations adapted from DJ&A "7333.30 Lodgepole Creek Bridge - Design-P&P.pdf."

0 50 100

Approximate Scale In Feet

N

USGS The National Map: National Boundaries Dataset, 3DEP Elevation Program, Geographic Names Information System, National Hydrography Dataset, National Land Cover Database,

USFS Lodgepole and Lower Ninemile Bridge Designs
Chelan County, Washington

SITE AND EXPLORATION PLAN

December 2025

113461-001

SHANNON & WILSON

FIG. 2
Sheet 1 of 2

LEGEND

⊕ Approximate Boring Location and Designation

Proposed Bridge Location

NOTES

1. Map overlay from DJ&A "Lower Ninemile Creek Road Bridge Design, 30% Draft Plans, Sheet 2."
2. Proposed bridge locations adapted from DJ&A "7333.30 Ninemile Creek Bridge - Design-P&P1.pdf"

0 50 100

Approximate Scale In Feet

N

USGS The National Map: National Boundaries Dataset, 3DEP Elevation Program, Geographic Names Information System, National Hydrography Dataset, National Land Cover Database,

USFS Lodgepole and Lower Ninemile Bridge Designs
Chelan County, Washington

SITE AND EXPLORATION PLAN

December 2025

113461-001

SHANNON & WILSON

FIG. 2
Sheet 2 of 2

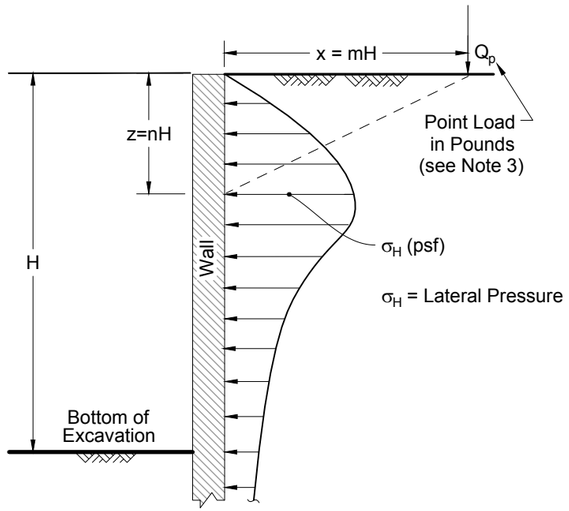

ELEVATION VIEW

For m ≤ 0.4: $\sigma_H = 0.28 \frac{Q_p}{H^2} \frac{n^2}{(0.16 + n^2)^3}$ (psf) (see Note 3)

For m > 0.4: $\sigma_H = 1.77 \frac{Q_p}{H^2} \frac{m^2 n^2}{(m^2 + n^2)^3}$ (psf)

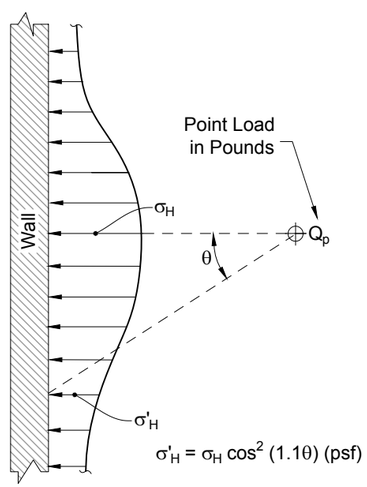

PLAN VIEW

A) LATERAL PRESSURE DUE TO POINT LOAD i.e. SMALL ISOLATED FOOTING OR WHEEL LOAD

(NAVFAC DM 7.2, 1986)

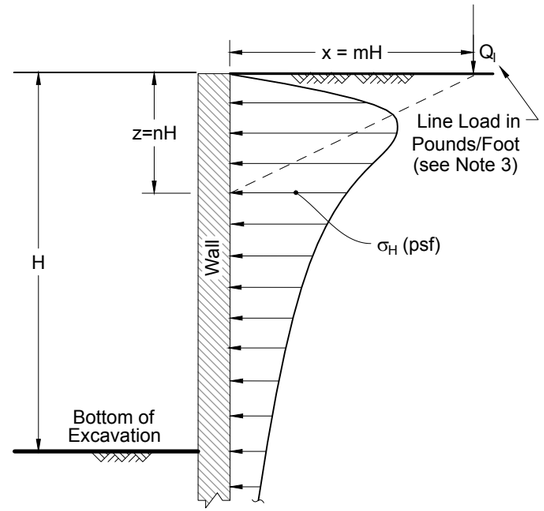

ELEVATION VIEW

For m ≤ 0.4: $\sigma_H = 0.20 \frac{Q_l}{H} \frac{n}{(0.16 + n^2)^2}$ (psf) (see Note 3)

For m > 0.4: $\sigma_H = 1.28 \frac{Q_l}{H} \frac{m^2 n}{(m^2 + n^2)^2}$ (psf)

B) LATERAL PRESSURE DUE TO LINE LOAD i.e. NARROW CONTINUOUS FOOTING PARALLEL TO WALL

(NAVFAC DM 7.02, 1986)

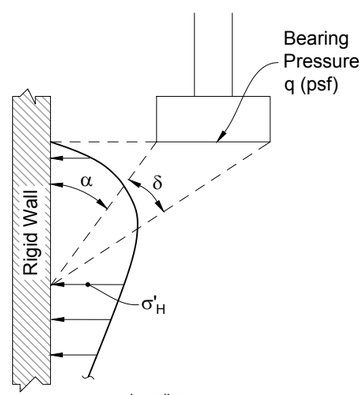

in radians

$\sigma_H = \frac{2q}{\pi} (\delta - \sin \delta \cos (\delta + 2\alpha))$ (psf)

C) LATERAL PRESSURE DUE TO STRIP LOAD

(AASHTO LRFD Bridge Design Specifications, 2017)

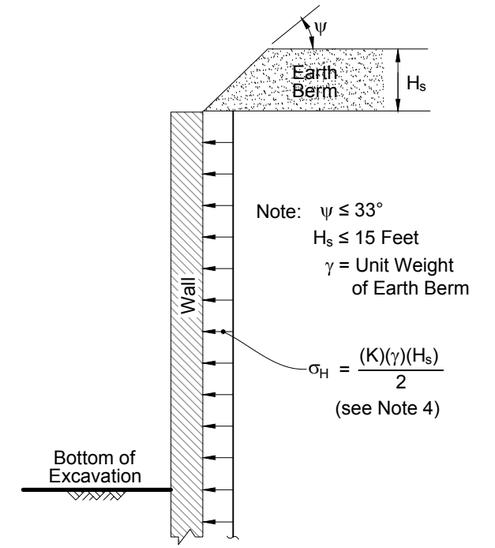

EARTH BERM

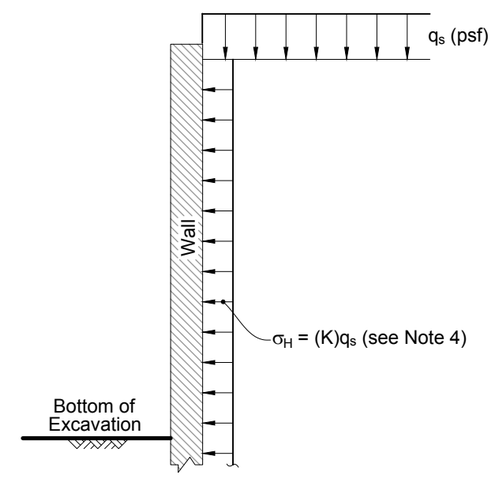

UNIFORM SURCHARGE

D) LATERAL PRESSURE DUE TO EARTH BERM OR UNIFORM SURCHARGE

(derived from Poulos and Davis, *Elastic Solutions for Soil and Rock Mechanics*, 1974; and Terzaghi and Peck, *Soil Mechanics in Engineering Practice*, 1967)

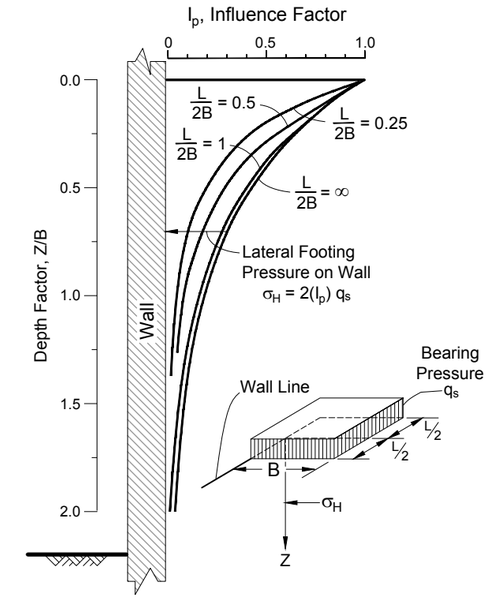

E) LATERAL PRESSURE DUE TO ADJACENT FOOTING
(see Notes 5 and 6)

(derived from NAVFAC DM 7.02, 1986; and Sandhu, *Earth Pressure on Walls Due to Surcharge*, 1974)

NOTES

1. Figures are not drawn to scale.
2. Applicable surcharge pressures should be added to appropriate permanent wall lateral earth and water pressure.
3. If point or line loads are close to the back of the wall such that m ≤ 0.4, it may be more appropriate to model the actual load distribution (i.e., Detail E) or use more rigorous analysis methods.
4. See text for recommended K values.
5. The stress is estimated on the back of the wall at the center of the length, L, of loading.
6. The estimated stress is based on a Poisson's ratio of 0.5.

USFS Lodgepole and Lower Ninemile
Bridge Designs
Chelan County, Washington

RECOMMENDED SURCHARGE LOADING FOR TEMPORARY AND PERMANENT WALLS

December 2025 113461-001

SHANNON & WILSON **FIG. 3**

File: J:\Support\Library_Standard Figures\Surcharge Loading Temp-Perm Wall_Tabloid.dwg Date: 05-30-2019 Author: sac

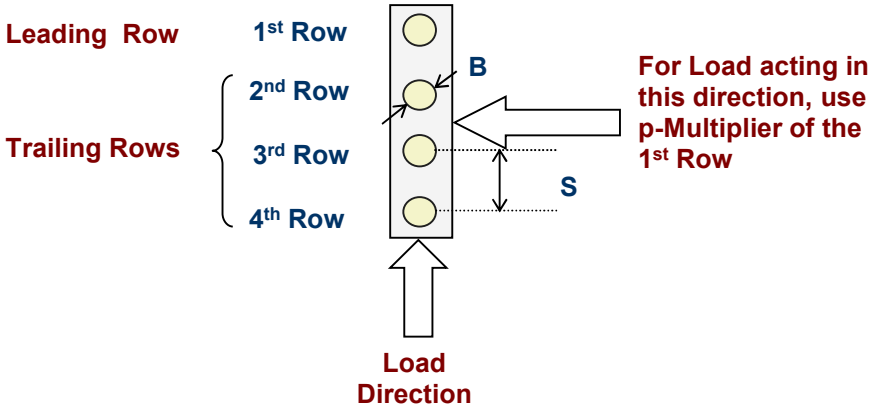

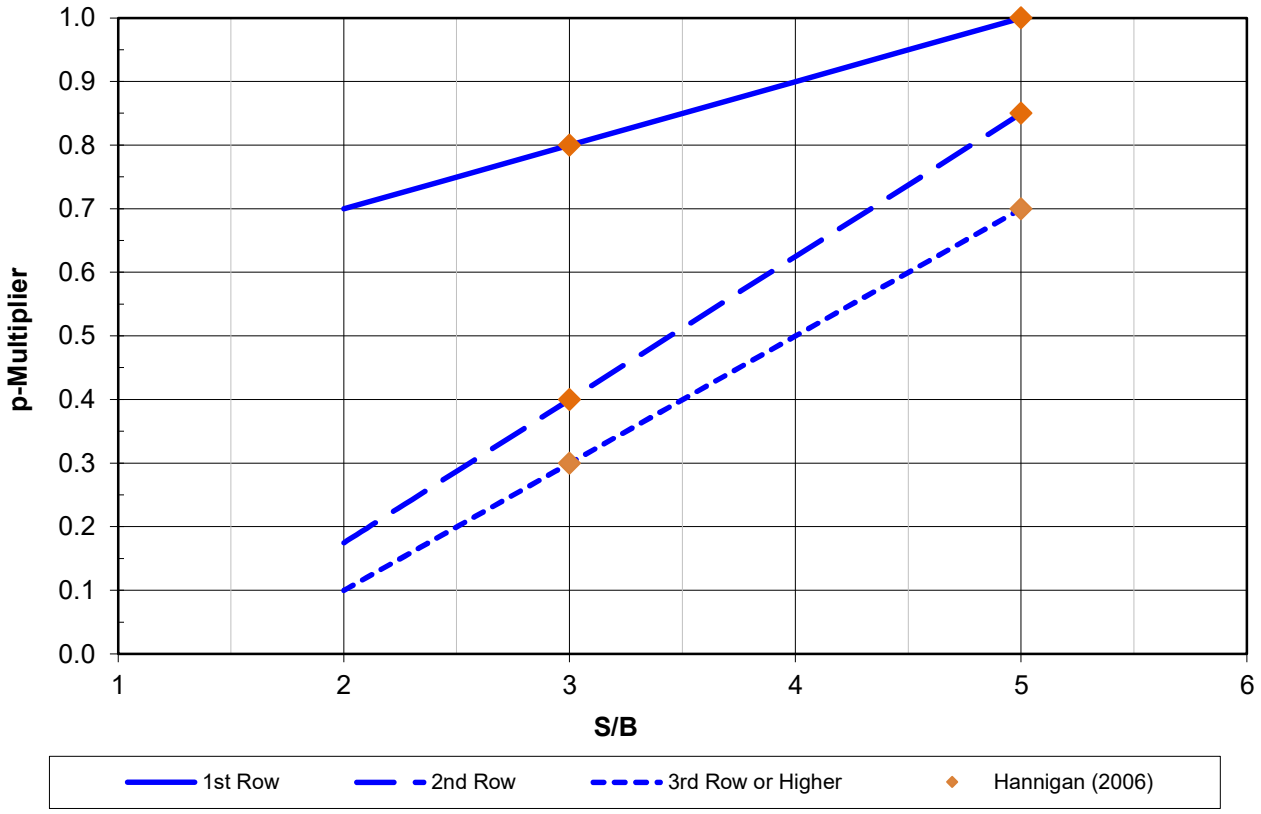

Reference: AASHTO (2020) LRFD Bridge Specifications (from Hannigan et al., 2006)

NOTE:

1. The P-multipliers provided above were developed for vertical piles/shafts only, and were linearly interpolated for S/B from 2 to 5 based on Hannigan (2006).

USFS Lodgepole and Lower Ninemile Bridge Designs
Chelan County, Washington

RECOMMENDED P-MULTIPLIERS FOR HORIZONTALLY LOADED PILE GROUPS

December 2025 113461-001

SHANNON & WILSON, INC.
Geotechnical and Environmental Consultants

FIG. 4

APPENDIX A: SUBSURFACE EXPLORATIONS

Appendix A

Subsurface Explorations

CONTENTS

A.1 Introduction A-1
A.2 Explorations A-1
A.2.1 Soil and Rock Classification System A-1
A.2.2 Standard Penetration Test (SPT) A-2
A.2.3 Sonic Core Samples A-2

Figures

Log Key
Logs of Borings SW-B1-01, SW-B1-02, SW-B2-01, and SW-B1-02
Sonic Core Photographs - Boring SW-B2-01

A.1 INTRODUCTION

Shannon & Wilson conducted the field exploration from July 10 to July 13, 2025, which consisted of drilling four borings, designated SW-B1-01, SW-B1-02, SW-B2-01, and SW-B2-02 at the approximate locations shown on Figure 2. The methods used to conduct the field exploration programs are described below.

A.2 EXPLORATIONS

The borings were coordinated (including subcontractor coordination and utility locates) and observed by Shannon & Wilson. Individual boring logs are attached in this appendix. The exploration logs represent our interpretation of the contents of the field log and results of select laboratory testing. The borings were drilled by Holt Services, Inc. under subcontract to Shannon & Wilson.

Borings were drilled using a track-mounted drill rig using sonic coring methods. Continuous soil and bedrock samples were collected using roto-sonic drilling methods, and Standard Penetration Test (SPT) samples were collected at approximate 5-foot intervals through overburden soils between some core runs. In boring SW-B2-02, HQ3 triple-tube rock coring methods were attempted to advance the boring to depth but were unsuccessful due to the very strong rock encountered. Sampling intervals for the borings are shown in the boring logs. Where groundwater was encountered, our field representative measured the approximate depth to groundwater using an electronic water level indicator. On completion of drilling, the borings were backfilled with bentonite chips poured into the boreholes through the drill casing while withdrawing the casing and the pavement was patched with cold patch asphalt. Excess drill cuttings were spread on site.

We obtained the locations of the borings using a recreational-grade GPS device. Therefore, the locations of the boring locations should be considered accurate to the degree implied by the methods used. Boring elevations were provided by DJ&A, as estimated from ground surface contours.

A.2.1 Soil and Rock Classification System

During drilling, our representative collected samples and prepared field logs of the explorations. Soil classification for this project was based on ASTM International (ASTM) Designation: D2487, Standard Practice for Classification of Soils for Engineering Purposes (Unified Soil Classification System), and ASTM Designation: D2488, Standard Practice for Description and Identification of Soils (Visual-Manual Procedure). The Unified Soil

Classification System (USCS) is summarized on the attached Log Key. The Shannon & Wilson representative classified rock samples in general accordance with the International Society of Rock Mechanics (ISRM) classification method. According to this system, rocks are classified based on the stratigraphic structure, rock strength, degree of weathering, and other properties. The rock classification system is summarized on the attached Log Key.

A.2.2 Standard Penetration Test (SPT)

Disturbed samples were obtained in general accordance with the SPT (ASTM Designation: D1586). The SPT consists of driving a 2-inch outside diameter (O.D.), 1.375-inch inside diameter split-spoon sampler a distance of 18 inches with a 140-pound hammer free-falling a distance of 30 inches. An automatic hammer system was used to advance the samplers. During sampling, the Shannon & Wilson field representative recorded the number of blows for each 6-inch increment of penetration and summed the blow counts for the last two 6-inch increments. This sum is recorded as the penetration resistance number, or N-value. If high penetration resistance prevented driving the total length of the sampler, the Shannon & Wilson field representative recorded the partial penetration depth and blow count. The N-values provide a means for evaluating the relative density or compactness of cohesionless (granular) soils and consistency or stiffness of cohesive (fine-grained) soils (see Log Key). The N-values are shown in the individual boring logs. Representative portions of the split-spoon sample obtained in conjunction with the SPT were placed in a screw-top plastic jar and transported to our laboratory in Denver, Colorado.

A.2.3 Sonic Core Samples

During each sampling run, the core barrel was advanced 5 feet into the soil/rock at the bottom of the borehole and then extracted from the hole. During sonic core drilling, the soil or bedrock core collected during a sampling run is extracted from the core barrel using a combination of gravity and vibration. The extracted soil or bedrock is captured at the bottom of the core barrel and placed into plastic bags. Each core run typically contained about 1 to 5 feet of soil or bedrock; therefore, multiple bags were typically required for each run. After the soil and bedrock samples were retrieved from the sonic core, the Shannon & Wilson representative observed the material contained in the bags and annotated the field boring log. Selected soil and bedrock core samples were placed into 1-gallon bags and were labeled with job name, date, boring number, run numbers, and depth range and transported to our laboratory.

SOIL CLASSIFICATION

Shannon & Wilson uses a soil identification system modified from the Unified Soil Classification System (USCS) as described on this Key. Soil descriptions are based on visual-manual procedures (ASTM D2488) and available laboratory index test results (ASTM D2487).

Exhibit A: Unified Soil Classification System (USCS)[1]

Major Divisions			Symbol	Typical Identifications (USCS Group Names)[2,4]
COARSE-GRAINED SOILS *(> 50% of soil is retained on the No. 4 sieve[3])*	**GRAVELS** *(> 50% of coarse fraction retained on the No. 4 sieve[3])*	**Gravel** *(< 5% fines[3])*	GW	Well-graded Gravel; Well-Graded Gravel with Sand
			GP	Poorly Graded Gravel; Poorly Graded Gravel with Sand
		Silty or Clayey Gravel *(> 12% fines[3])*	GM	Silty Gravel; Silty Gravel with Sand
			GC	Clayey Gravel; Clayey Gravel with Sand
	SANDS *(≥ 50% of coarse fraction passes the No. 4 sieve[3])*	**Sand** *(< 5% fines[3])*	SW	Well-graded Sand; Well-graded Sand with Gravel
			SP	Poorly Graded Sand; Poorly Graded Sand with Gravel
		Silty or Clayey Sand *(> 12% fines[3])*	SM	Silty Sand; Silty Sand with Gravel
			SC	Clayey Sand; Clayey Sand with Gravel
FINE-GRAINED SOILS *(≥ 50% of soil passes the No. 200 sieve[3])*	**SILTS AND CLAYS** *(liquid limit < 50)*	**Inorganic**	ML	Silt; Silt with Sand or Gravel; Sandy or Gravelly Silt
			CL	Lean Clay; Lean Clay with Sand or Gravel; Sandy or Gravelly, Lean Clay
		Organic	OL	Organic Silt or Clay; Organic Silt or Clay with Sand or Gravel; Sandy or Gravelly, Organic Silt or Clay
	SILTS AND CLAYS *(liquid limit ≥ 50)*	**Inorganic**	MH	Elastic Silt; Elastic Silt with Sand or Gravel; Sandy or Gravelly, Elastic Silt
			CH	Fat Clay; Fat Clay with Sand or Gravel; Sandy or Gravelly, Fat Clay
		Organic	OH	Organic Silt or Clay; Organic Silt or Clay with Sand or Gravel; Sandy or Gravelly, Organic Silt or Clay
HIGHLY ORGANIC SOILS	*Primarily organic matter, dark in color, and organic odor*		PT	Peat or other Highly Organic Soils (see ASTM D4427)

NOTE: *For gravels and sands with 5 to 12% fines[3], the following are added to the Group Name:* with Silt and/or Clay or Silty Clay. *Dual Symbols are used:* GW-GM, GP-GM, SW-SM, SP-SM GW-GC, GP-GC, SW-SC, SP-SC

EXHIBIT A NOTES:
1. Adapted, with permission, from USACE Tech Memo 3-357, ASTM D2487, and ASTM D2488.
2. Borderline symbols (symbols separated by a slash) indicate that the soil characteristics are close to the defining boundary between two groups (e.g., CL/ML = Lean Clay to Silt; SP-SM/SM = Sand with Silt to Silty Sand).
3. No. 4 size = 4.75 millimeters (mm) = 0.187 inch; No. 200 sieve size = 0.075 mm = 0.003 inch. Particles smaller 0.075 mm are termed "fines".
4. Poorly graded indicates a narrow range or missing grain sizes. Well-graded indicates a full-range and even distribution of grain sizes.
5. If cobbles and/or boulders are observed, "with cobbles" or "with boulders" or "with cobbles and boulders" is added to the Group Name.

Exhibit B-1: Standard Penetration Test (SPT)

Term	Description
Hammer	140-pound weight with a 30-inch free fall. Hammer types vary (e.g., automatic, rope and cathead). If available, the hammer type and energy ratio (E-ratio) is noted on the boring log.
Sampler	Barrel I.D. / O.D. = 1.5 inches / 2 inches (liner not used) Barrel Length = 30 inches; Shoe I.D. = 1.375 inches
N-Value (N)[1]	Sum of the count of hammer blows to penetrate the second and third 6-inch increments in blows per foot (bpf). **Refusal**: 50 blows for 6 inches or less or 10 blows for 0 inch.

Exhibit B-2: Relative Consistency of Cohesive Soils

Term	N[2] (bpf)	PP[3] (tsf)	TV[3] (tsf)
Very Soft	0 - 2	0 - 0.25	0 - 0.12
Soft	2 - 4	0.25 - 0.5	0.12 - 0.25
Medium Stiff	4 - 8	0.5 - 1	0.25 - 0.5
Stiff	8 - 15	1 - 2	0.5 - 1
Very Stiff	15 - 30	2 - 4	1 - 2
Hard	> 30	> 4	> 2

Exhibit B-3: Relative Density of Cohesionless Soils

Term	N[2] (bpf)
Very Loose	0 - 4
Loose	4 - 10
Medium Dense	10 - 30
Dense	30 - 50
Very Dense	> 50

EXHIBIT B NOTES:
1. N-values shown on boring logs are as recorded in the field and have not been corrected for hammer energy, overburden, or other factors. Where the hammer E-ratio is available, the N-value normalized to a ratio of 60% (N_{60}) is listed.
2. Based on ASTM Standard D1586. Relative densities/consistencies noted on the boring logs are based on uncorrected N-values.
3. PP = pocket penetrometer; TV = torvane, tsf = tons per square foot. Correlations based on experience and multiple published references.

Exhibit C: Soil Structure[1]

Term	Description
Blocky	Cohesive soil that can be broken down into small angular lumps that resist further breakdown.
Fissured	Breaks along definite planes or fractures with little resistance.
Homogeneous	Same color and appearance throughout.
Interbedded	Alternating layers at least 1/4 inch thick of varying material or color. *Singular: bed*
Laminated	Alternating layers less than 1/4 inch thick of varying material or color. *Singular: lamination*
Lensed	Inclusion of small pockets of different soils, such as small lenses of sand scattered through a mass of clay.
Slickensided	Fracture planes appear polished or glossy, sometimes striated.

EXHIBIT C NOTE:
1. Adapted, with permission, from ASTM D2488.

Exhibit D: Soil Plasticity[1]

Term	Description
Nonplastic	Cannot roll a 1/8-inch thread at any water content.
Low Plasticity	A thread can barely be rolled and a lump cannot be formed when drier than the plastic limit.
Medium Plasticity	A thread is easy to roll and not much time in rolling is required to reach the plastic limit. The thread cannot be rerolled after reaching the plastic limit. A lump crumbles when drier than the plastic limit.
High Plasticity	It takes considerable time rolling and kneading to reach the plastic limit. A thread can be rerolled several times after reaching the plastic limit. A lump can be formed without crumbling when drier than the plastic limit.

EXHIBIT D NOTE:
1. Adapted, with permission, from ASTM D2488.

Exhibit E: Soil Moisture Content[1]

Term	Description
Dry	Absence of moisture, dusty, dry to the touch.
Moist	Damp but no visible water.
Wet	Visible free water, from below water table.

EXHIBIT E NOTE:
1. Adapted, with permission, from ASTM D2488 (Figure 2).

Exhibit F: Soil Cementation[1]

Term	Description
Weak	Crumbles or breaks with handling or slight finger pressure.
Moderate	Crumbles or breaks with considerable finger pressure.
Strong	Will not crumble or break with finger pressure.

EXHIBIT F NOTE:
1. Adapted, with permission, from ASTM D2488.

Exhibit G: Percentages

Term	Percent[1]
Trace	<5
Few	5 to 10
Little	15 to 25
Some	30 to 45
Mostly	>50

EXHIBIT G NOTE:
1. Percent estimated by weight for sand and gravel, and by volume for cobbles, organics, and other non-soil material (e.g., rubble, debris).

File: 113461 LODGEPOLE & NINEMILE GPJ | Library: SW GINT LIBRARY.GLB | Date: 8/13/25

SOIL CLASSIFICATION *(continued)*

See Page 1 for Soil Classification Exhibits A through G

Exhibit H: Particle Angularity and Shape[1]

Term	Description
Angular	Sharp edges and unpolished planar surfaces.
Subangular	Similar to angular, but with rounded edges.
Subrounded	Nearly planar sides with well-rounded edges.
Rounded	Smoothly curved sides with no edges.
Flat	Width to thickness ratio > 3.
Elongated	Width to thickness ratio < 3.

EXHIBIT H NOTE:
1. Adapted, with permission, from ASTM D2488.

Exhibit I: Additional Descriptive Terms

Term	Description
Mottled	Irregular patches of different colors.
Bioturbated	Soil disturbance or mixing by plants or animals.
Diamict	Nonsorted sediment; sand and gravel in silt and/or clay matrix.
Cuttings	Material brought to surface by drilling action.
Slough	Material that caved from sides of borehole.
Sheared	Disturbed texture, mix of strengths.

SOIL CLASSIFICATION REFERENCES:
ASTM International, [current edition], Annual book of standards, v. 04.08, soil and rock (I): D420 - D5876, available: www.astm.org.
U.S. Army Corps of Engineers, 1953, The unified soil classification system: Vicksburg, Miss., Waterways Experiment Station, Technical Memorandum 3-357, 2 v., March.

SYMBOLOGY AND GRAPHICS

Exhibit J: Sample and Run Graphics

Graphic	Description	Graphic	Description	Graphic	Description
	SPT split spoon (2-inch OD)		Split spoon (SS) (diameters vary)		Core run (typically rock)
	Grab (GB) from cuttings or excavation		Modified California (MC) sampler		Sheath (SH) (used for geoprobes)
	Tube (TB) (e.g., Shelby, piston)		Sonic core (SC) run (typically soil)		

Exhibit K: Hole Backfill and Instrument Graphics

Graphic	Description	Graphic	Description	Graphic	Description
	Bentonite-cement grout		Surface cement seal		Blank pipe or instrument casing
	Bentonite grout		Sand filter pack		Perforated or slotted pipe
	Bentonite chips		Slough *(hole caved)*		VWP and electric lead

Exhibit L: Other Log Symbols

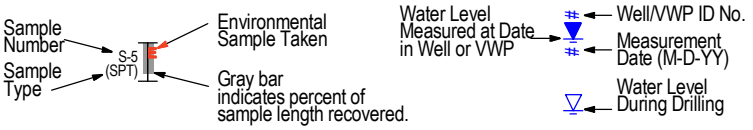

ROCK CLASSIFICATION

Shannon & Wilson uses a rock classification system modified from the system recommended by the International Society for Rock Mechanics (ISRM). Copyright limitations prevent us from reproducing summary tables from the ISRM system on this Key. General descriptions are provided in Exhibit M.

Exhibit M: General Rock Descriptive Terms - ISRM

Term	General Description
Strength	Ranges from extremely weak (q_u = 36 to 135 psi) to extremely strong (q_u > 36,250 psi), and is based on the ability to break the rock with a hammer or scrape the rock with a knife.
Weathering	Ranges from fresh (no visible signs of weathering) to completely weathered, based on observed degree of discoloration, decomposition, and/or disintegration. When the rock material has completely converted to soil, it is termed a residual soil.
Fabric	Describes the rock structure based on observed layering, tendency to break, and distribution of minerals (e.g., massive, bedded, foliated).
Roughness	For discontinuities: Includes rough, smooth, and slickensided, and includes other descriptive terms (e.g., stepped, undular, irregular, planar).
Spacing	For discontinuities: Ranges from extremely close (< 1 inch) to extremely wide (> 20 feet).
Persistence	For discontinuities: Ranges from very low to very high.
Other	Description of discontinuities (joints, fractures, bedding planes, etc.), observations of potential displacement, gouge, shear, etc.

REFERENCE: Brown, E. T., ed., 1981, Rock characterization, testing & monitoring: International Society of Rock Mechanics (ISRM) suggested methods: Oxford, Pergamon Press, 211 p.

Exhibit N: Rock Name Graphics

Graphic	Description	Graphic	Description
	Schist		

Exhibit O: Recovery and RQD Equations[1]

Term	Equation
Core Recovery (REC) in %	$100\% \times \frac{\text{Length of Core Recovered}}{\text{Length of Core Run}}$
Rock Quality Designation (RQD) in %	$100\% \times \frac{\text{Length of Core in Pieces} > 4\text{ in}}{\text{Length of Core Run}}$

REFERENCE: Loehr, J. E.; Lutenegger, A.; Rosenblad, B.; and Boeckmann, A., 2016, Geotechnical site characterization: U.S. Federal Highway Administration Report FHWA NHI-16-072, Geotechnical Engineering Circular no. 5, 1 v.

ACRONYMS AND ABBREVIATIONS

ATD	at time of drilling	N	field (uncorrected) SPT N-value	REF	refusal
bpf	blows per foot	N_{60}	SPT N-value corrected for 60% ETR	RQD	rock quality designation (ASTM D6032)
dia, diam	diameter	NA, n/a	not applicable or not available	SC	sonic core
Elev.	elevation	NE	northeast	SE	southeast
ENV	environmental sample	NP	nonplastic	SPT	Standard Penetration Test (ASTM D1586)
ETR	energy transfer ratio (hammer)	NR	no recovery	SW	southwest
FC	fines content (< 0.075 mm)	NW	northwest	TP	test pit
FeO	iron oxide	OC	organic content	tsf	tons per square foot
ft or '	foot or feet	OD	outside diameter	TV	tor vane reading
gal	gallons	OW	observation well	UCS, q_u	unconfined compressive strength
GP	geoprobe	pcf	pounds per cubic foot	USCS	Unified Soil Classification System
GWT	groundwater table	PI	plasticity index	VST	vane shear test
HSA	hollow-stem auger	PID	photoionization detector	VWP	vibrating wire piezometer
ID	inside diameter or identification	PL	plastic limit	WC	natural water content
in or "	inch	PMT	pressuremeter test	WOH	weight of hammer
incl	inclinometer	PP	pocket penetrometer reading	WOR	weight of rods
ksf	kips per square foot	ppm	parts per million		
lbs	pounds	psi	pounds per square inch		
LL	liquid limit	PT	nonstandard penetration test N-value		
mm	millimeter	REC	recovery		

File: 113461_LODGEPOLE & NINEMILE GP J | Library: SW GINT LIBRARY.GLB | Date: 8/8/25

SHANNON & WILSON

BORING LOG

USFS Lodgepole and Ninemile
Chelan County, Washington

SW-B1-01

EXPLORATION INFORMATION

Total Depth:	*61.5 feet*
Top Elevation:	*~2284 feet*
Vertical Datum:	*NAVD88*
Northing:	*~319,562 feet*
Easting:	*~1,597,382 feet*
Horizontal Datum:	*WA-N SP [NAD 1983]*
Station and Offset:	*13+60,*
Hole Finish Date:	*June 11, 2025*

DRILLING INFORMATION

Drilling Method:	*Sonic Core*
Drilling Company:	*Holt Services, Inc.*
Drill Rig Equipment:	*TSi 150 cc*
Hole Size:	*5 inch*
Rod Type/Dia.:	*NWJ 2.63 inch*
Hammer Wt. / Drop:	*140 lbs/30 inches*
Hammer ETR:	*n/a*

BASIC LEGEND

(See separate LOG KEY for additional symbols, acronyms, and definitions)

Abbreviations

N	Standard Penetration Test (SPT) blows per 6-inch increment
PT	Penetration test (not SPT) blows per 6-inch increment
bpf	Blows per foot for penetration test
WC	Natural water content (%)
FC	Fines content (% grains smaller than 0.075 mm)
PI	Plasticity index (Atterberg Limits)

Symbols

Sample Number / Sample Type → S-5 (SPT) ← Gray bar indicates percent of sample length recovered.

Water Level During Drilling →

Approx. Elev. (feet)	Depth (feet)	Material Description and Other Observations	Graphic	Depth (feet)	Samples	Field Data	Lab Data	Multiple Items Plotted *(see bottom legend on Page 1)* 0 50 100	Depth (feet)
		ASPHALT; 2 inches		0.2					
		AGGREGATE BASE COURSE; 6 inches		0.5					
2280	5	Medium dense to very dense, brown to red-brown, ***SILTY SAND WITH GRAVEL AND COBBLES*** (SM) to ***SILTY GRAVEL WITH SAND AND COBBLES*** (GM); moist; subrounded gravel. [A-1-b] Colluvium *-Granodiorite boulder from 2 to 5 feet.*			*No Observed Groundwater*				5
2275	10								10
2270	15								15
2265	20								20
2260	25								25
2255	30								30
2250	35								35

Samples: R-1, S-1 (SPT); R-2, S-2 (SPT); R-3, S-3 (SPT); R-4, S-4 (SPT), S-5 (GB); R-5, S-6 (SPT); R-6, S-7 (SPT); R-7, S-8 (SPT); R-8

Sample	Field Data	Lab Data
S-1 (SPT)	N = 17,39,50/5" (89/11" bpf)	WC=4%
S-2 (SPT)	N = 10,30,28 (58 bpf)	Point Load=Average Appx. Compressive Strength (psi): 28,500/33,500 (Perpendicular)/ (Parallel) WC=8%
S-3 (SPT)	N = 19,21,29 (50 bpf)	WC=6% FC=15% pH=8.2 RES=6800 OhmCm
S-4 (SPT)	N = 10,19,10 (29 bpf)	WC=5%
S-5 (GB)		
S-6 (SPT)	N = 12,20,18 (38 bpf)	WC=8%
S-7 (SPT)	N = 15,22,24 (46 bpf)	WC=7% FC=13%
S-8 (SPT)	N = 22,29,25 (54 bpf)	WC=6%

NOTES:
- Refer to LOG KEY for explanation of symbols, codes, abbreviations, and definitions.
- Groundwater level, if indicated above, is for the date specified and may vary.
- Group symbol is based on visual-manual identification and selected lab testing.
- Report text contains limitations and information needed to contextually understand this log.

▲ Uncorrected N-value, bpf
▼ Uncorrected, Penetration N-value, bpf
● = WC% ◇ = FC%
Plastic Limit ├──●──┤ Liquid Limit

FINAL

Logged by:	BWV
Review by:	WJZ
Version:	1

USFS Lodgepole and Ninemile
Chelan County, Washington

SW-B1-01

See Page 1 for Hole Information and Notes

Approx. Elev. (feet)	Depth (feet)	Material Description and Other Observations	Graphic	Depth (feet)	Samples	Field Data	Lab Data	Multiple Items Plotted *(see bottom legend on Page 1)* 0 50 100	Depth (feet)
2245		Medium dense to very dense, brown to red-brown, ***SILTY SAND WITH GRAVEL AND COBBLES*** (SM) to ***SILTY GRAVEL WITH SAND AND COBBLES*** (GM); moist; subrounded gravel. [A-1-b] Colluvium *(starts on previous page)* *-Trace to few cobbles below 40 feet*			R-8				
	40				S-9 (SPT)	N = 26,20,26 (46 bpf)	WC=9%	● ▲	40
2240					R-9				
	45								45
		Red-brown, ***SILTY SAND*** (SM); moist; fine grained; iron oxide staining. Outwash		46.5	R-10		FC=39% LL/PI=NP/NP	◇	
2235				48.0	S-10 (GB)				
	50	Dense to very dense, red-brown to gray-brown, ***SILTY SAND WITH GRAVEL*** (SM); moist; trace to few cobbles; iron oxide staining. Till			S-11 (SPT)	N = 44,35,30 (65 bpf)	WC=8% FC=14%	●◇ ▲	50
2230					R-11				
	55								55
2225									
	60				S-12 (SPT)	N = 20,18,23 (41 bpf)		▲	60
	61.5			61.5					

BOTTOM OF HOLE AT 61.5 FEET

SHANNON & WILSON

BORING LOG

USFS Lodgepole and Ninemile
Chelan County, Washington

SW-B1-02

EXPLORATION INFORMATION

Total Depth:	*71.5 feet*
Top Elevation:	*~2283 feet*
Vertical Datum:	*NAVD88*
Northing:	*~319,600 feet*
Easting:	*~1,597,275 feet*
Horizontal Datum:	*WA-N SP [NAD 1983]*
Station and Offset:	*14+70,*
Hole Finish Date:	*June 10, 2025*

DRILLING INFORMATION

Drilling Method:	*Sonic Core*
Drilling Company:	*Holt Services, Inc.*
Drill Rig Equipment:	*TSi 150 cc*
Hole Size:	*5 inch*
Rod Type/Dia.:	*NWJ 2.63 inch*
Hammer Wt. / Drop:	*140 lbs/30 inches*
Hammer ETR:	*n/a*

BASIC LEGEND

(See separate LOG KEY for additional symbols, acronyms, and definitions)

Abbreviations

N	Standard Penetration Test (SPT) blows per 6-inch increment
PT	Penetration test (not SPT) blows per 6-inch increment
bpf	Blows per foot for penetration test
WC	Natural water content (%)
FC	Fines content (% grains smaller than 0.075 mm)
PI	Plasticity index (Atterberg Limits)

Symbols

Sample Number → S-5
Sample Type → (SPT)
Gray bar indicates percent of sample length recovered.

Water Level During Drilling →

Approx. Elev. (feet)	Depth (feet)	Material Description and Other Observations	Graphic	Depth (feet)	Samples	Field Data	Lab Data	Multiple Items Plotted *(see bottom legend on Page 1)* 0 50 100	Depth (feet)
		ASPHALT; 2 inches		0.2					
		AGGREGATE BASE COURSE; 6 inches		0.7					
2280		Medium dense to dense, brown to red-brown, ***SILTY SAND WITH GRAVEL AND COBBLES*** (SM); moist; subangular to subrounded gravel. [A-1-b] Colluvium			R-1 S-1 (SPT)	N = 10,11,9 (20 bpf)	WC=14% FC=25%		
					R-1 S-2 (GB)				
	5				R-2 S-3 (SPT)	N = 17,20,17 (37 bpf)	WC=5%		5
2275									
	10				R-2 S-4 (SPT)	N = 17,24,23 (47 bpf)	WC=6%		10
2270					R-3		Point Load=Average Appx. Compressive Strength (psi): 15,200/10,000 (Perpendicular)/ (Parallel) WC=3% FC=11%		
				14.0					
	15	Very dense, brown, ***POORLY GRADED GRAVEL WITH SILT AND SAND AND COBBLES*** (GP-GM); moist; subangular gravel. Colluvium			R-3 S-5 (SPT)	N = 12,47,50/4" (97/10" bpf)		>>	15
2265				17.0					
		Medium dense to dense, brown to red-brown, ***SILTY SAND WITH GRAVEL AND COBBLES*** (SM); moist to wet; subangular to subrounded gravel. Colluvium			R-4				
	20				R-4 S-6 (SPT)	N = 15,15,33 (48 bpf)	WC=5%		20
2260					R-5 S-7 (GB)				
	25				R-5 S-8 (SPT)	N = 18,17,18 (35 bpf)	WC=10%		25
2255					R-6				
	30	*-Few cobbles below 30 feet.*			R-6 S-9 (SPT)	N = 7,14,23 (37 bpf)	WC=7%		30
2250					R-7				
	35				R-7 S-10	N = 15,19,27	WC=8%		35

Water sealed off past 30 feet

NOTES:
- Refer to LOG KEY for explanation of symbols, codes, abbreviations, and definitions.
- Groundwater level, if indicated above, is for the date specified and may vary.
- Group symbol is based on visual-manual identification and selected lab testing.
- Report text contains limitations and information needed to contextually understand this log.

▲ Uncorrected N-value, bpf
▼ Uncorrected, Penetration N-value, bpf
● = WC% ◇ = FC%

FINAL

Logged by:	BWV
Review by:	WJZ
Version:	1

Job#: 113461-001 | Template Ver:1 | File: 113461_LODGEPOLE & NINEMILE.GPJ | Rpt: BORING LOG | Library: SW GINT LIBRARY.GLB | Date: 8/20/25

USFS Lodgepole and Ninemile
Chelan County, Washington

SW-B1-02

See Page 1 for Hole Information and Notes

Approx. Elev. (feet)	Depth (feet)	Material Description and Other Observations	Graphic	Depth (feet)	Samples	Field Data	Lab Data	Multiple Items Plotted *(see bottom legend on Page 1)* 0 50 100	Depth (feet)
2245		Very dense, brown to red-brown, ***POORLY GRADED SAND WITH CLAY AND GRAVEL AND COBBLES*** (SP-SC); wet; subangular gravel. Colluvium		37.0	(SPT) R-8	(46 bpf)			
	40				S-11 (SPT) R-9	N = 12,15,44 (59 bpf)	WC=12% FC=12%		40
2240									
	45			45.8	S-12 (SPT) R-10	N = 20,10,15 (25 bpf)	WC=7%		45
2235		Medium dense, brown to red-brown, ***SILTY SAND*** (SM); moist; trace subrounded gravel; 1 inch thick interbedded lean clay layer; iron oxide staining. Outwash		47.0					
	50	Very dense, red-brown, ***POORLY GRADED SAND WITH SILT AND GRAVEL*** (SP-SM); moist to wet; trace rounded to subrounded cobbles; rounded to subrounded gravel; iron oxide staining. Till			S-13 (SPT) R-11	N = 22,40,50/5" (90/11" bpf)		>>	50
2230									
	55				S-14 (SPT) R-12	N = 17,33,50/5" (83/11" bpf)	WC=6% FC=11%	>>	55
2225									
	60				S-15 (SPT) R-13	N = 24,32,37 (69 bpf)	WC=7%		60
2220				64.0					
	65	Very dense, gray-brown, ***CLAYEY SAND WITH GRAVEL*** (SC); moist; few subangular to subrounded cobbles; iron oxide staining. Till			R-14				65
2215									
	70				S-16 (SPT)	N = 12,23,40 (63 bpf)	WC=8%		70
	71.5			71.5					

BOTTOM OF HOLE AT 71.5 FEET

Job#: 113461-001 | Template Ver:1 | File: 113461_LODGEPOLE & NINEMILE.GPJ | Rpt: BORING LOG | Library: SW GINT LIBRARY.GLB | Date: 8/20/25

SHANNON & WILSON

BORING LOG

USFS Lodgepole and Ninemile
Chelan County, Washington

SW-B2-01

EXPLORATION INFORMATION

Total Depth:	*70.0 feet*
Top Elevation:	*~2297 feet*
Vertical Datum:	*NAVD88*
Northing:	*~314,836 feet*
Easting:	*~1,605,703 feet*
Horizontal Datum:	*WA-N SP [NAD 1983]*
Station and Offset:	*3+50,*
Hole Finish Date:	*June 13, 2025*

DRILLING INFORMATION

Drilling Method:	*Sonic Core*
Drilling Company:	*Holt Services, Inc.*
Drill Rig Equipment:	*TSi 150 cc*
Hole Size:	*5 inch*
Rod Type/Dia.:	*NWJ 2.63 inch*
Hammer Wt. / Drop:	*140 lbs/30 inches*
Hammer ETR:	*n/a*

BASIC LEGEND

(See separate LOG KEY for additional symbols, acronyms, and definitions)

Abbreviations

N	Standard Penetration Test (SPT) blows per 6-inch increment
PT	Penetration test (not SPT) blows per 6-inch increment
bpf	Blows per foot for penetration test
WC	Natural water content (%)
FC	Fines content (% grains smaller than 0.075 mm)
PI	Plasticity index (Atterberg Limits)

Symbols

Sample Number / Sample Type → S-5 (SPT) ← Gray bar indicates percent of sample length recovered.

Water Level During Drilling →

Approx. Elev. (feet)	Depth (feet)	Material Description and Other Observations	Graphic	Depth (feet)	Samples	Field Data	Lab Data	Multiple Items Plotted (see bottom legend on Page 1)	Depth (feet)
		ASPHALT; 3.5 inches		0.3					
		AGGREGATE BASE COURSE; 6 inches		0.8					
2295		Medium dense, brown, ***SILTY SAND WITH GRAVEL*** (SM); moist; trace charcoal. [A-1-b] Fill		4.0	R-1 S-1 (SPT)	N = 9,9,12 (21 bpf)	S-1A : WC=5% S-1B : WC=9% FC=22% LL/PI=NP/NP		
	5	Medium dense to very dense, ***SILTY SAND WITH GRAVEL AND COBBLES*** (SM); moist to wet; iron oxide staining. Colluvium			R-2 S-2 (SPT)	N = 11,13,11 (24 bpf)	WC=6%		5
2290					R-2				
	10				S-3 (SPT)	N = 20,38,50/3" (88/9" bpf)	WC=4% FC=16%	>>	10
2285					R-3				
	15				S-4 (SPT)	N = 8,11,12 (23 bpf)	WC=9%		15
2280					R-4				
		Red-brown, ***SILTY SAND*** (SM); moist; iron oxide staining. Outwash		18.5					
	20			19.5	S-5 (SPT)	N = 10,17,21 (38 bpf)	WC=13%		20
2275		Dense to very dense, gray, ***SILTY SAND*** (SM); moist; trace subrounded gravel. Till *-Iron oxide staining to 21 feet.*			R-5				
	25				S-6 (SPT)	N = 26,50,50 (100 bpf)	WC=10% FC=43% LL/PI=17/3	H	25
2270					S-7 (GB) R-6				
	30				S-8 (SPT)	N = 18,33,26 (59 bpf)	WC=13%		30
2265				32.0					
		Medium dense to dense, light gray to white, ***CLAYEY SAND*** (SC); moist. Residuum [***SCHIST***: extremely weak, completely weathered]			R-7 S-9	N = 13,12,21	WC=5%		
	35								35

6-13-25

NOTES:
- Refer to LOG KEY for explanation of symbols, codes, abbreviations, and definitions.
- Groundwater level, if indicated above, is for the date specified and may vary.
- Group symbol is based on visual-manual identification and selected lab testing.
- Report text contains limitations and information needed to contextually understand this log.

▲ Uncorrected N-value, bpf
▼ Uncorrected, Penetration N-value, bpf
● = WC% ◇ = FC%
Plastic Limit ——●—— Liquid Limit

FINAL

Logged by:	BWV
Review by:	WJZ
Version:	1

USFS Lodgepole and Ninemile
Chelan County, Washington

SW-B2-01

See Page 1 for Hole Information and Notes

Approx. Elev. (feet)	Depth (feet)	Material Description and Other Observations	Graphic	Depth (feet)	Samples	Field Data	Lab Data	Multiple Items Plotted *(see bottom legend on Page 1)* 0 50 100	Depth (feet)
2260		Medium dense to dense, light gray to white, ***CLAYEY SAND*** (SC); moist. Residuum [***SCHIST***: extremely weak, completely weathered] *(starts on previous page)*			(SPT) R-8	(33 bpf)			
2255	40				S-10 (SPT)	N = 8,10,18 (28 bpf)	WC=5%	● ▲	40
		SCHIST: extremely weak to very weak, light gray to white, micaceous; slightly weathered to fresh; banded with strong to very strong marble 6 inches to 2 feet thick.		43.0	R-9				
2250	45				R-10				45
2245	50				S-11 (SPT)	N = 34,37,36 (73 bpf)	WC=8%	● ▲	50
					R-11		Point Load=Average Appx. Compressive Strength (psi): 18,000/15,500 (Perpendicular)/ (Parallel)		
2240	55				R-12		Point Load=Average Appx. Compressive Strength (psi): 25,000/11,900 (Perpendicular)/ (Parallel)		55
2235	60				R-13				60
2230	65				R-14		Point Load=Average Appx. Compressive Strength (psi): 1,300/600 (Perpendicular)/ (Parallel)		65
	70			70.0					70

BOTTOM OF HOLE AT 70 FEET

SHANNON & WILSON

BORING LOG

USFS Lodgepole and Ninemile
Chelan County, Washington

SW-B2-02

EXPLORATION INFORMATION

Total Depth:	*37.5 feet*
Top Elevation:	*~2296 feet*
Vertical Datum:	*NAVD88*
Northing:	*~314,798 feet*
Easting:	*~1,605,634 feet*
Horizontal Datum:	*WA-N SP [NAD 1983]*
Station and Offset:	*4+25,*
Hole Finish Date:	*June 12, 2025*

DRILLING INFORMATION

Drilling Method:	*Sonic Core*
Drilling Company:	*Holt Services, Inc.*
Drill Rig Equipment:	*TSi 150 cc*
Hole Size:	*5 inch*
Rod Type/Dia.:	*NWJ 2.63 inch*
Hammer Wt. / Drop:	*140 lbs/30 inches*
Hammer ETR:	*n/a*

BASIC LEGEND

(See separate LOG KEY for additional symbols, acronyms, and definitions)

Abbreviations

N	Standard Penetration Test (SPT) blows per 6-inch increment
PT	Penetration test (not SPT) blows per 6-inch increment
bpf	Blows per foot for penetration test
WC	Natural water content (%)
FC	Fines content (% grains smaller than 0.075 mm)
PI	Plasticity index (Atterberg Limits)

Symbols

Sample Number / Sample Type → S-5 (SPT) ← Gray bar indicates percent of sample length recovered.

Water Level During Drilling →

Approx. Elev. (feet)	Depth (feet)	Material Description and Other Observations	Graphic	Depth (feet)	Samples	Field Data	Lab Data	Multiple Items Plotted (see bottom legend on Page 1) 0 50 100	Depth (feet)
2295		***ASPHALT;*** 2 inches		0.2					
		AGGREGATE BASE COURSE; 6 inches		0.7					
		Loose to very dense, light gray to white, ***CLAYEY SAND*** (SC); moist. [A-2-6] Residuum [***SCHIST***: extremely weak, completely weathered]			*No Observed Groundwater*				
2290	5				R-1, S-1 (SPT), S-2 (GB)	N = 8,3,3 (6 bpf)	WC=4%		5
					R-2, S-3 (SPT)	N = 5,9,14 (23 bpf)	WC=9% FC=32% LL/PI=37/12		
2285	10				R-3, S-4 (SPT)	N = 14,22,24 (46 bpf)	WC=4% pH=6.6 RES=10000 OhmCm		10
2280	15				R-4, S-5 (SPT)	N = 9,10,12 (22 bpf)	WC=36%		15
2275	20				R-5, S-6 (SPT)	N = 14,22,38 (60 bpf)	WC=3%		20
		SCHIST: extremely weak to very weak, light gray to white, micaceous; slightly weathered to fresh		23.5					
2270	25				R-6, S-7 (SPT)	N = 26,50/5" (50/5" bpf)	WC=3% FC=24% LL/PI=32/5	>>	25
2265	30				R-7, S-8 (SPT)	N = 26,36,50/5" (86/11" bpf)	WC=4%	>>	30
2260	35				R-8, S-9 (SPT)	N = 50/2" (50/2" bpf)	WC=9%	>>	35
	37.5	BOTTOM OF HOLE AT 37.5 FEET		37.5					

NOTES:
- Refer to LOG KEY for explanation of symbols, codes, abbreviations, and definitions.
- Groundwater level, if indicated above, is for the date specified and may vary.
- Group symbol is based on visual-manual identification and selected lab testing.
- Report text contains limitations and information needed to contextually understand this log.

▲ Uncorrected N-value, bpf
▼ Uncorrected, Penetration N-value, bpf
● = WC% ◇ = FC%
Plastic Limit ●—● Liquid Limit

FINAL

Logged by:	BWV
Review by:	WJZ
Version:	1

Top of Core

Photo Match Line

Photo Match Line

Run 10: 45.0 – 50.0 feet

Run	Top (feet)	Bottom (feet)
R-10	45.0	50.0

USFS Lodgepole and Lower Ninemile
Bridge Designs
Chelan County, Washington

SONIC CORE PHOTOGRAPHS
BORING SW-B2-01

December 2025 113461-001

SHANNON & WILSON

Sheet 1 of 5

Top of Core

Photo Match Line

Photo Match Line

Run 11: 51.5 – 55.0 feet

Run	Top (feet)	Bottom (feet)
R-11	51.5	55.0

USFS Lodgepole and Lower Ninemile
Bridge Designs
Chelan County, Washington

SONIC CORE PHOTOGRAPHS
BORING SW-B2-01

December 2025 113461-001

SHANNON & WILSON

Sheet 2 of 5

Top of Core

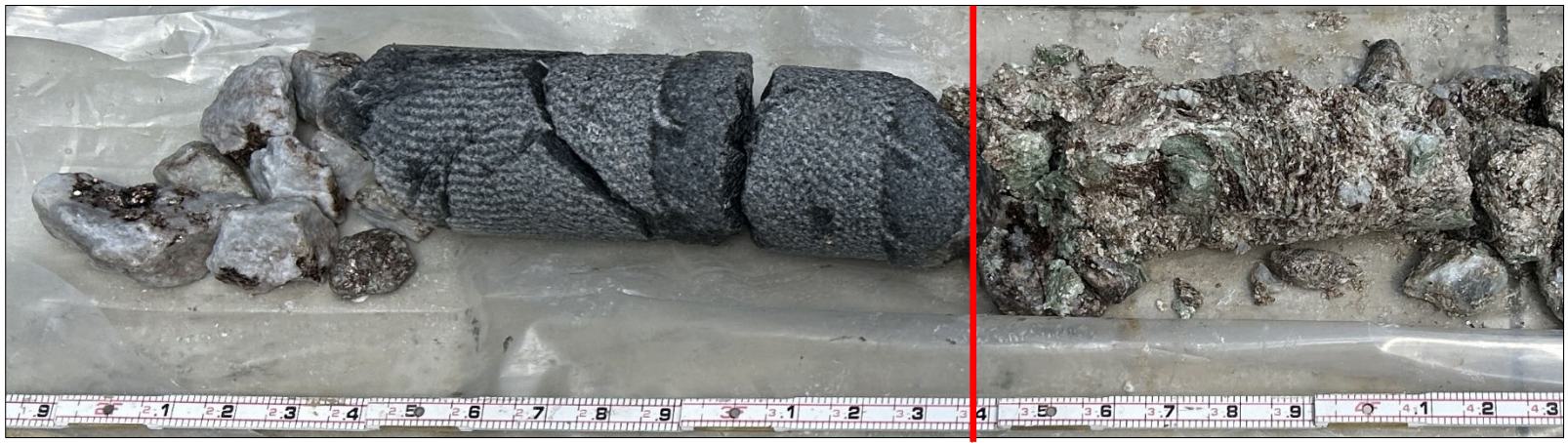

Photo Match Line

Photo Match Line

Run 12: 55.0 – 60.0 feet

Run	Top (feet)	Bottom (feet)
R-12	55.0	60.0

USFS Lodgepole and Lower Ninemile
Bridge Designs
Chelan County, Washington

SONIC CORE PHOTOGRAPHS
BORING SW-B2-01

December 2025 113461-001

SHANNON & WILSON

Sheet 3 of 5

Top of Core

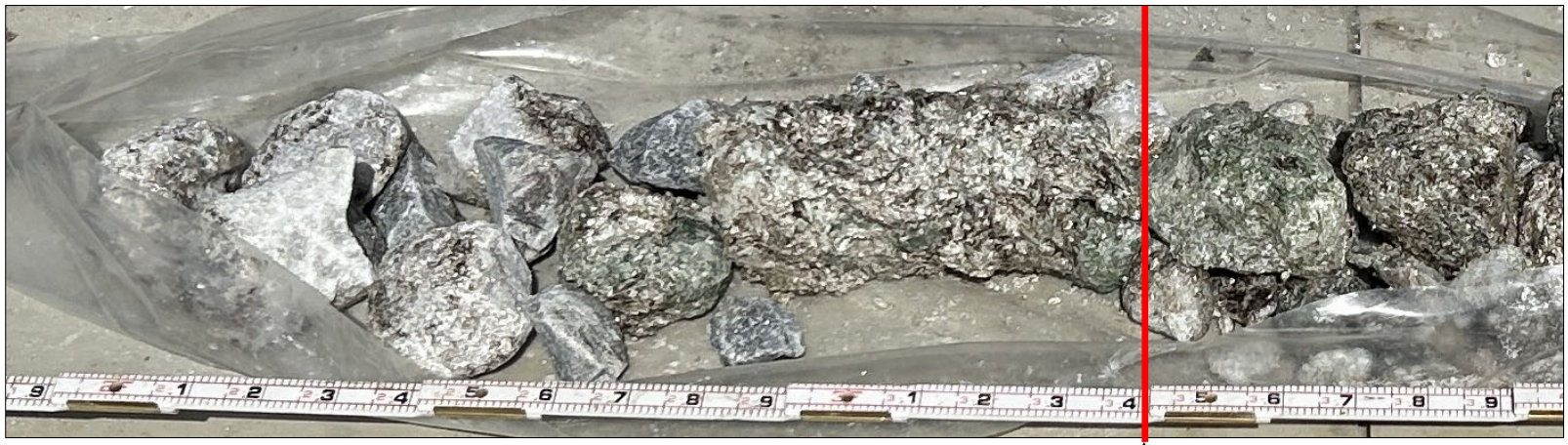

Photo Match Line

Photo Match Line

Run 13: 60.0 – 65.0 feet

Run	Top (feet)	Bottom (feet)
R-13	60.0	65.0

USFS Lodgepole and Lower Ninemile
Bridge Designs
Chelan County, Washington

SONIC CORE PHOTOGRAPHS
BORING SW-B2-01

December 2025 113461-001

SHANNON & WILSON

Sheet 4 of 5

Top of Core

Photo Match Line

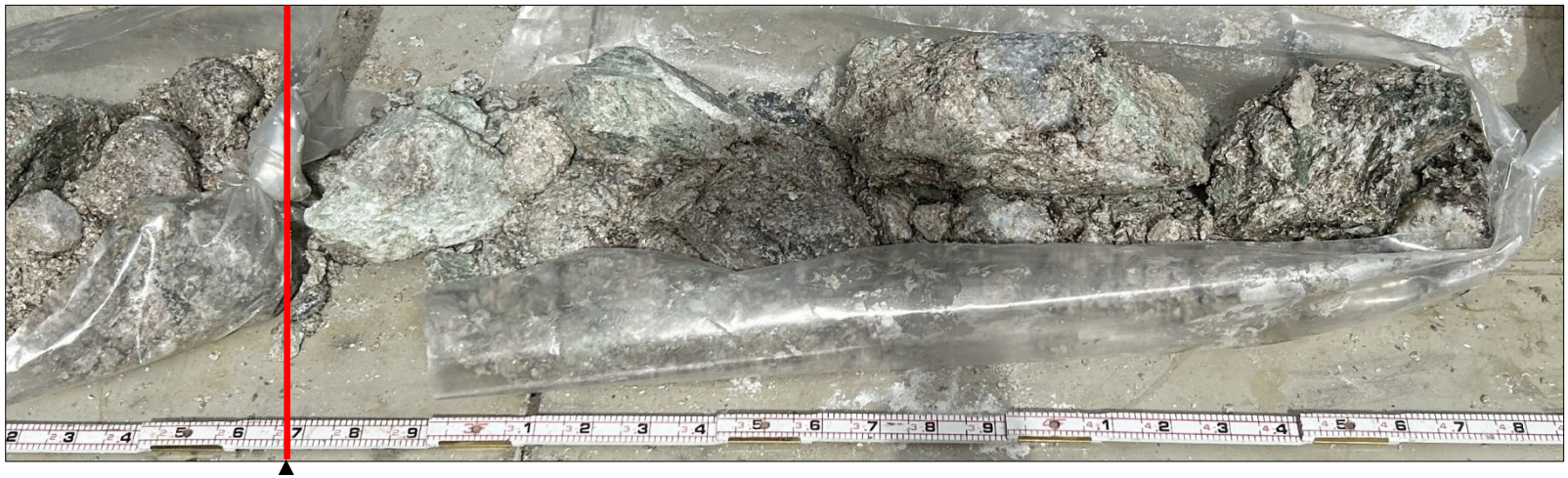

Photo Match Line

Run 14: 65.0 – 70.0 feet

Run	Top (feet)	Bottom (feet)
R-14	65.0	70.0

USFS Lodgepole and Lower Ninemile
Bridge Designs
Chelan County, Washington

SONIC CORE PHOTOGRAPHS
BORING SW-B2-01

December 2025 113461-001

SHANNON & WILSON

Sheet 5 of 5

APPENDIX B: LABORATORY TEST RESULTS

Appendix B

Laboratory Test Results

CONTENTS

B.1 Introduction B-1
B.2 Geotechnical Index Tests B-1
B.2.1 Water Content B-1
B.2.2 Grain Size Analysis B-1
B.2.3 Atterberg Limits B-1
B.3 Geotechnical Engineering Property Tests B-2
B.3.1 Corrosion B-2
B.3.2 Point Load Test B-2

Exhibits

Exhibit B-1: Typical Modes of Failure for Valid and Invalid Tests B-3

Tables

Table B-1: Summary of Laboratory Test Results by Boring
Table B-2: Summary of Point Load Test Results for Rock

Figures

Grain Size Distribution
Plasticity Chart

B.1 INTRODUCTION

Laboratory tests were completed on soil and rock samples retrieved from the borings in general accordance with the American Association of State Highway and Transportation Officials (AASHTO) and American Society of Testing and Materials International (ASTM) testing methods. The laboratory testing program was performed to classify the materials into similar geologic groups and provide data that can be used for design of the project. The geotechnical laboratory testing was performed at our laboratory in Denver, Colorado. A summary of the laboratory test results is presented in Tables B-1 and B-2. The following sections describe the laboratory testing procedures.

B.2 GEOTECHNICAL INDEX TESTS

B.2.1 Water Content

Water content was determined for selected samples in general accordance with AASHTO T265, Laboratory Determination of Moisture Content in Soils. To perform this test, a sample was weighed before and after oven-drying, and the water content was calculated. Water content determinations are shown graphically on the boring logs presented in Appendix A and are also summarized in Table B-1.

B.2.2 Grain Size Analysis

The grain size distribution of selected samples was determined in general accordance with AASHTO T311, Standard Method of Test for Grain-Size Analysis of Granular Soil Materials. Results of these analyses are presented as grain size distribution curves by boring number series on the attached Grain Size Distribution figure and summarized in Table B-1. Selected samples were also tested for the percentage of material passing the No. 200 sieve in general accordance with AASHTO T11, Standard Method of Test for Materials Finer than 75-µm (No. 200) Sieve in Mineral Aggregates by Washing. The percent fines (silt- and clay-sized particles passing the No. 200 sieve) are shown graphically on the boring logs in Appendix A and are also summarized in Table B-1.

B.2.3 Atterberg Limits

Soil plasticity was determined by performing Atterberg limits tests on selected fine-grained samples. The tests were completed in general accordance with AASHTO T89, Standard Method of Test for Determining the Liquid Limit of Soils and AASHTO T90, Standard Method of Test for Determining the Plastic Limit and Plasticity Index of Soils. The

Atterberg limits include liquid limit (LL), plastic limit (PL), and plasticity index (PI equals LL minus PL) and are generally used to assist in classification of soils, to indicate soil consistency (when compared to natural water content), and to provide correlation to soil properties. The results of the Atterberg limits tests are plotted on the attached Plasticity Chart, shown graphically on the boring logs in Appendix A, and summarized in Table B-1.

B.3 GEOTECHNICAL ENGINEERING PROPERTY TESTS

B.3.1 Corrosion

Corrosion testing of a sample was performed for pH, resistivity, sulfate content, and chloride content. Testing for pH was done in accordance with AASHTO T289, Standard Method of Test for Determining pH of Soil for Use in Corrosion Testing. Testing for resistivity was done in accordance with ASTM G 57, Field Measurement of Soil Resistivity Using the Wenner Four-Electrode Method. Sulfate and chloride content testing were done in accordance AASHTO T290-91, Standard Method of Test for Determining Water-Soluble Ion Content in Soil. Chloride content testing was done in accordance with AASHTO T291-91, Standard Method of Test for Determining Water-Soluble Chloride Ion Content in Soil. Test results for sulfate and chloride content are given in units of percent by weight. The test results are summarized in Table B-1.

B.3.2 Point Load Test

Point load tests were conducted on specimens from selected rock core samples which were not suitable for UCS testing based on the size or shape of the core sample. The tests were completed at our in-house laboratory in general accordance with ASTM D5731, Standard Test Method for Determination of Point Load Strength Index of Rock. The test is performed by placing a rock core specimen between two conical platens mounted on a test frame. The initial specimen diameter is measured with a micrometer before and after the test. The specimen is then loaded by hydraulically jacking the conical points together until the specimen fails, at which time the failure load is recorded. Specimens were loaded in one of two ways:

- Axial: loaded parallel to the longitudinal axis of the core sample.
- Irregular/Block: loaded perpendicular to the longitudinal axis where the sample was not cylindrical.

Exhibit B-1: Typical Modes of Failure for Valid and Invalid Tests

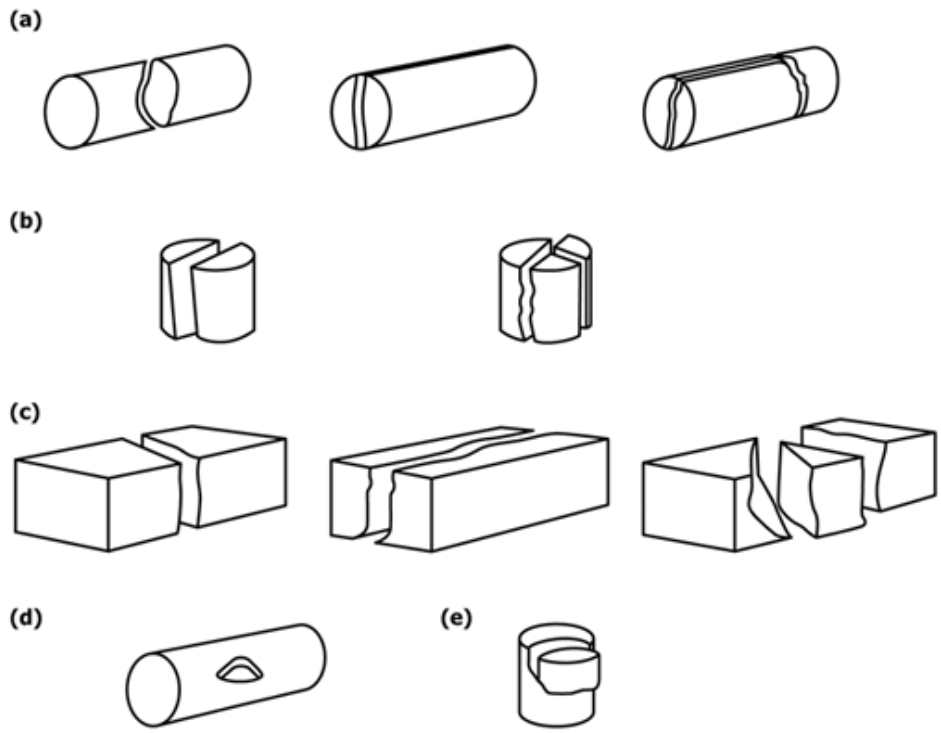

(a) Valid diametral tests; (b) valid axial tests; (c) valid block tests; (d) invalid core tests; and (e) invalid axial test (point load strength index test).

The product of the pressure gauge reading, and the piston area is divided by the square of the specimen diameter to obtain the point load strength index, I_s. The I_s value is corrected to an $I_{s(50)}$ is then multiplied to an index-to-strength conversion factor to obtain an estimate of uniaxial compressive strength (UCS). Test results are presented and summarized on Table B-1 and B-2.

Table B-1 - Summary of Laboratory Test Results by Boring

SAMPLE DATA							GRAIN SIZE ANALYSIS[2]			ATTERBERG LIMITS			CORROSION			
Boring	Sample	Depth (feet) Top	Depth (feet) Bottom	USCS Symbol[1]	AASHTO Soil Classification (Group Index)	Natural Moisture Content (%)	Gravel (%)	Sand (%)	Fines (%)	Liquid Limit	Plastic Limit	Plasticity Index	pH	Resistivity (ohm-cm)	Sulfates (%)	Chlorides (%)
SW-B1-01	S-1	0.2	1.6			3.6										
	R-1	1.6	6.0													
	S-2	6.0	7.5			8.0										
	S-3	10.0	11.5	SM		6.1	38	48	15				8.0	6,800	0.11	0.079
	S-4	15.0	16.5			4.8										
	S-6	20.0	21.5			8.0										
	S-7	25.0	26.5	GM		7.3	44	43	13							
	S-8	30.0	31.5			6.4										
	S-9	40.0	41.5			8.8										
	S-10	46.5	48.0	SM	A-4 (0)		0	61	39	NP	NP	NP				
	S-11	50.0	51.5	SM		8.0	28	58	14							
SW-B1-02	S-1	0.2	1.7	SM		14.2	19	56	25							
	S-3	5.0	6.5			5.2										
	S-4	10.0	11.5			5.9										
	R-3	11.5	15.0													
	S-5	15.0	16.3	GP-GM		3.3	45	44	11							
	S-6	20.0	21.5			4.8										
	S-8	25.0	26.5			10.2										
	S-9	30.0	31.5			7.5										
	S-10	35.0	36.5			8.1										
	S-11	40.0	41.5	SP-SC		11.9	23	65	12							
	S-12	45.0	46.5			6.8										
	S-14	55.0	56.4	SP-SM		6.2	41	48	11							
	S-15	60.0	61.5			6.7										
	S-16	70.0	71.5			7.8										
SW-B2-01	S-1	0.5	0.8			5.2										
	S-1	0.8	2.0	SM	A-1-b (0)	8.5	36	42	22	NP	NP	NP				
	S-2	5.0	6.5			6.3										
	S-3	10.0	11.3	SM		4.2	36	48	16							
	S-4	15.0	16.5			9.3										
	S-5	20.0	21.5			12.9										
	S-6	25.0	26.5	SM	A-4 (0)	9.9	2	54	43	17	14	3				
	S-8	30.0	31.5			12.6										
	S-9	35.0	36.5			5.5										
	S-10	40.0	41.5			5.0										
	S-11	50.0	51.5			8.3										
	R-12	51.5	55.0													
	R-13	55.0	60.0													
	R-15	65.0	70.0													

Table B-1 - Summary of Laboratory Test Results by Boring

SAMPLE DATA							GRAIN SIZE ANALYSIS[2]			ATTERBERG LIMITS			CORROSION			
Boring	Sample	Depth (feet) Top	Depth (feet) Bottom	USCS Symbol[1]	AASHTO Soil Classification (Group Index)	Natural Moisture Content (%)	Gravel (%)	Sand (%)	Fines (%)	Liquid Limit	Plastic Limit	Plasticity Index	pH	Resistivity (ohm-cm)	Sulfates (%)	Chlorides (%)
SW-B2-02	S-1	1.0	2.5			3.5										
	S-3	5.0	6.5	SM	A-2-6 (0)	8.7			32	37	25	12				
	S-4	10.0	11.5			3.9							7.0	>100,000	<0.01	0.052
	S-5	15.0	16.5			35.8										
	S-6	20.0	21.5			3.5										
	S-7	25.0	25.9	SM	A-2-4 (0)	2.9			24	32	27	5				
	S-8	30.0	31.4			3.9										
	S-9	35.0	35.2			8.6										

NOTES:

1. Refer to Appendix A, Log Key for definitions.
2. Gravel defined as particles larger than the No. 4 sieve size, Sand as particles between the No. 4 and No. 200 sieve sizes, and Fines as particles passing the No. 200 sieve.

NP = non-plastic; ohm-cm = ohm centimeters; pcf = pounds per cubic foot; psi = pounds per square inch; USCS = Unified Sol Classification System; AASHTO = American Association of State Highway and Transportation Officials

Table B-2 - Summary of Point Load Test Results for Rock

BORING NO.	SW-B1-01				SW-B1-02			
DEPTH	4.6 - 5				14.5 - 14.7			
SAMPLE NO.	R-1				R-3			
DATE TESTED	7/14/2025				7/17/2025			
TEST NUMBER	1	2	3	4	1	2	3	4
TEST TYPE	A	A	I	I	I	I	I	I
Distance Between Platens (in) - D:	1.69	1.87	1.93	1.83	1.40	2.22	1.42	1.48
Minimum Specimen Width (in) - W:	3.65	3.80	1.69	1.87	2.14	1.85	1.39	1.54
Equivalent Core Diameter (in) - D_e:	7.86	9.04	4.15	4.36	3.81	5.22	2.53	2.90
Minimum Failure Plane Area (in^2) - A:	6.17	7.10	3.26	3.42	2.99	4.10	1.99	2.28
Maximum Load (lbs):	8282	9253	6618	5506	2737	2107	1219	1857
Uncorrected Point Load Strength Index, I_s (psi):	1053.8	1023.3	1594.0	1263.1	718.4	403.3	481.9	640.0
Size Correction Factor - F:	1.17	1.21	1.02	1.03	1.00	1.07	0.91	0.94
Direction of Load with Respect to Fracture:	Perpendicular	Perpendicular	Parallel	Parallel	Perpendicular	Parallel	Parallel	Perpendicular
Failure Mode[2]:	B-1	B-1	C-2	C-3	C-3	C-2	C-2	C-2
Corrected Point Load Strength Index, $I_{s(50)}$ (psi):	1235.5	1238.2	1619.0	1297.0	715.7	431.3	437.8	599.6
Corrected Point Load Strength Index, $I_{s(50)}$ (kPa):	8,518.7	8,537.4	11,162.8	8,942.9	4,934.6	2,973.9	3,018.4	4,134.6
Approximate Compressive Strength, S_c (psi):	**28,400**	**28,500**	**37,200**	**29,800**	**16,500**	**9,900**	**10,100**	**13,800**

Table B-2 - Summary of Point Load Test Results for Rock

BORING NO.	SW-B2-01				SW-B2-01			
DEPTH	51.5 - 55.0				57.9 - 58.3			
SAMPLE NO.	R-12				R-13			
DATE TESTED	7/17/2025				7/17/2025			
TEST NUMBER	1	2	3	4	1	2	3	4
TEST TYPE	A	A	I	I	A	A	I	I
Distance Between Platens (in) - D:	1.15	1.59	1.63	1.91	0.90	1.35	1.26	1.25
Minimum Specimen Width (in) - W:	3.48	3.59	2.75	2.70	2.91	3.11	1.31	2.15
Equivalent Core Diameter (in) - D_e:	5.09	7.25	5.73	6.58	3.31	5.33	2.11	3.42
Minimum Failure Plane Area (in^2) - A:	4.00	5.70	4.50	5.17	2.60	4.18	1.65	2.69
Maximum Load (lbs):	3790	4770	3108	4523	1421	3070	3725	2219
Uncorrected Point Load Strength Index, I_s (psi):	744.1	657.5	542.8	687.7	428.7	576.6	1768.6	648.6
Size Correction Factor - F:	1.06	1.15	1.09	1.13	0.97	1.07	0.87	0.97
Direction of Load with Respect to Fracture:	Perpendicular	Parallel	Parallel	Perpendicular	Parallel	Parallel	Perpendicular	Perpendicular
Failure Mode[2]:	B-1	B-1	C-1	C-1	B-2	B-2	C-3	C-1
Corrected Point Load Strength Index, $I_{s(50)}$ (psi):	791.3	757.2	592.7	774.6	413.9	619.3	1541.9	630.7
Corrected Point Load Strength Index, $I_{s(50)}$ (kPa):	5,456.3	5,220.6	4,086.3	5,340.7	2,853.9	4,270.3	10,631.5	4,348.5
Approximate Compressive Strength, S_c (psi):	**18,200**	**17,400**	**13,600**	**17,800**	**9,500**	**14,200**	**35,500**	**14,500**

Table B-2 - Summary of Point Load Test Results for Rock

BORING NO.	SW-B2-01			
DEPTH	66.5 - 67.0			
SAMPLE NO.	R-15			
DATE TESTED	7/17/2025			
TEST NUMBER	1	2	3	4
TEST TYPE	A	A	I	I
Distance Between Platens (in) - D:	1.31	1.15	1.32	1.61
Minimum Specimen Width (in) - W:	2.83	3.14	1.13	1.36
Equivalent Core Diameter (in) - D_e:	4.72	4.60	1.89	2.78
Minimum Failure Plane Area (in^2) - A:	3.71	3.62	1.49	2.18
Maximum Load (lbs):	275	230	72	48
Uncorrected Point Load Strength Index, I_s (psi):	58.2	50.0	38.0	17.1
Size Correction Factor - F:	1.05	1.04	0.85	0.93
Direction of Load with Respect to Fracture:	Perpendicular	Perpendicular	Parallel	Parallel
Failure Mode[2]:	B-2	B-2	C-2	C-1
Corrected Point Load Strength Index, $I_{s(50)}$ (psi):	60.9	52.0	32.3	15.9
Corrected Point Load Strength Index, $I_{s(50)}$ (kPa):	419.6	358.4	222.8	109.7
Approximate Compressive Strength, S_c (psi):	**1,400**	**1,200**	**700**	**400**

NOTES:

1 Tests completed following ASTM D5731.

2 Typical modes of failure per ASTM D5731-16 Fig. 5. Refer to Exhibit B-1 in Appendix B.

D = diametral; A = axial; B = block; I = irregular

psi = pounds per square inch; kPa = kilopascals

GRAIN SIZE DISTRIBUTION TEST RESULTS

USFS Lodgepole and Ninemile
Chelan County, Washington

Gradation Chart

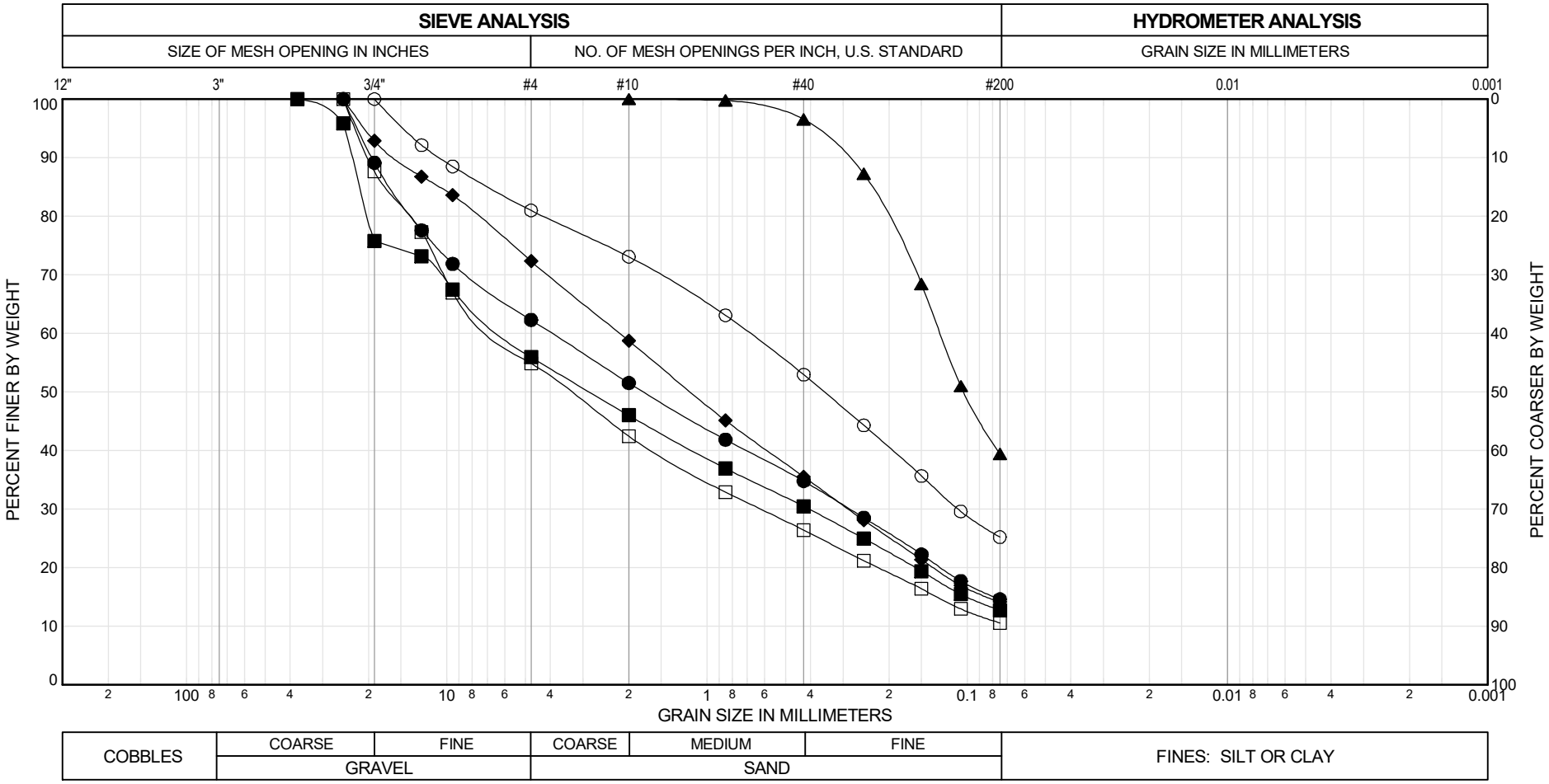

EXPLORATION AND SAMPLE NUMBER	DEPTH (feet)	UNIFIED SOIL CLASSIFICATION SYSTEM (USCS) GROUP NAME	USCS SYMBOL	GRAVEL %	SAND %	FINES %	NAT WC %	TEST BY/RVW	TEST STD	TEST NOTE
● SW-B1-01, S-3	10.0	SILTY SAND with GRAVEL *	SM	38	48	15	6.1	ATY JYS	D6913	
■ SW-B1-01, S-7	25.0	SILTY GRAVEL with SAND *	GM	44	43	13	7.3	ATY JYS	D6913	
▲ SW-B1-01, S-10	46.5	SILTY SAND	SM	0	61	39		ATY JYS	D6913	
◆ SW-B1-01, S-11	50.0	SILTY SAND with GRAVEL *	SM	28	58	14	8.0	ATY JYS	D6913	
○ SW-B1-02, S-1	0.2	SILTY SAND with GRAVEL *	SM	19	56	25	14.2	ATY JYS	D6913	
□ SW-B1-02, S-5	15.0	POORLY GRADED GRAVEL with SILT and SAND *	GP-GM	45	44	11	3.3	ATY JYS	D6913	

* Where indicated by *, the USCS Group Name was based on visual-manual examination procedures (ASTM D2488) and the the grain size distribution.
ABBREVIATIONS: NAT WC = natural moisture content; RVW = reviewed by; STD = Standard; USCS = Unified Soil Classification System code; ~ = approximately (used when measured but not greater than 0.5%)

Job#: 113461-001 | Template Ver.1 | File: 113461_LODGEPOLE & NINEMILE.GPJ | Library: SW GINT LIBRARY.GLB | Date: 8/13/25

USFS Lodgepole and Ninemile
Chelan County, Washington

Gradation Chart

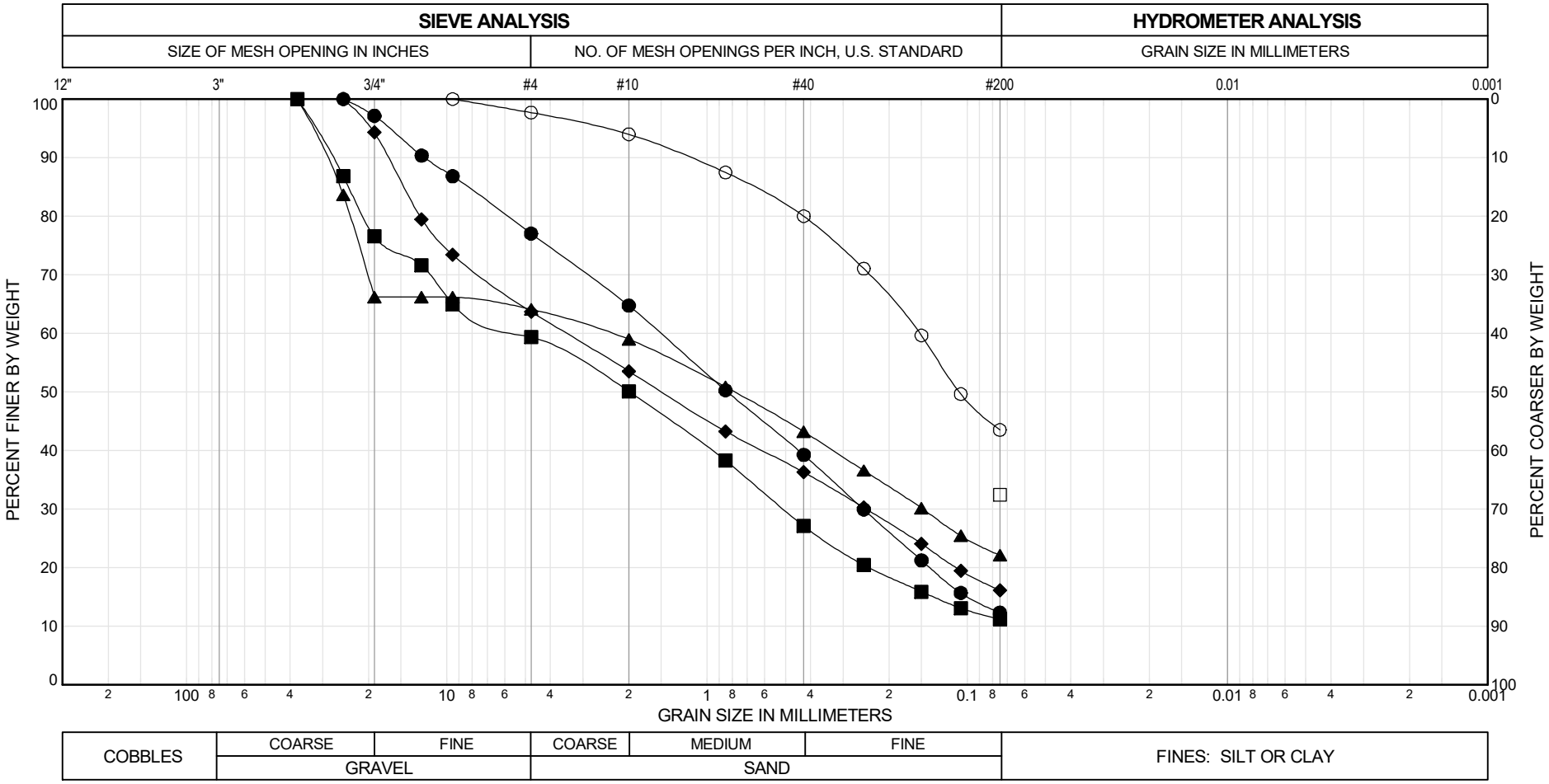

EXPLORATION AND SAMPLE NUMBER	DEPTH (feet)	UNIFIED SOIL CLASSIFICATION SYSTEM (USCS) GROUP NAME	USCS SYMBOL	GRAVEL %	SAND %	FINES %	NAT WC %	TEST BY/RVW	TEST STD	TEST NOTE
● SW-B1-02, S-11	40.0	POORLY GRADED SAND with CLAY and GRAVEL *	SP-SC	23	65	12	11.9	ATY JYS	D6913	
■ SW-B1-02, S-14	55.0	POORLY GRADED SAND with SILT and GRAVEL *	SP-SM	41	48	11	6.2	ATY JYS	D6913	
▲ SW-B2-01, S-1B	0.8	SILTY SAND with GRAVEL	SM	36	42	22	8.5	MKO JYS	D6913	
◆ SW-B2-01, S-3	10.0	SILTY SAND with GRAVEL *	SM	36	48	16	4.2	ATY JYS	D6913	
○ SW-B2-01, S-6	25.0	SILTY SAND	SM	2	54	43	9.9	ATY JYS	D6913	
□ SW-B2-02, S-3	5.0	SILTY SAND	SM			32	8.7	JDT JYS	D1140	

* Where indicated by *, the USCS Group Name was based on visual-manual examination procedures (ASTM D2488) and the the grain size distribution.
ABBREVIATIONS: NAT WC = natural moisture content; RVW = reviewed by; STD = Standard; USCS = Unified Soil Classification System code; ~ = approximately (used when measured but not greater than 0.5%)

Job#: 113461-001 | Template Ver:1 | File: 113461_LODGEPOLE & NINEMILE.GPJ | Library: SW GINT LIBRARY.GLB | Date: 8/13/25

USFS Lodgepole and Ninemile
Chelan County, Washington

Gradation Chart

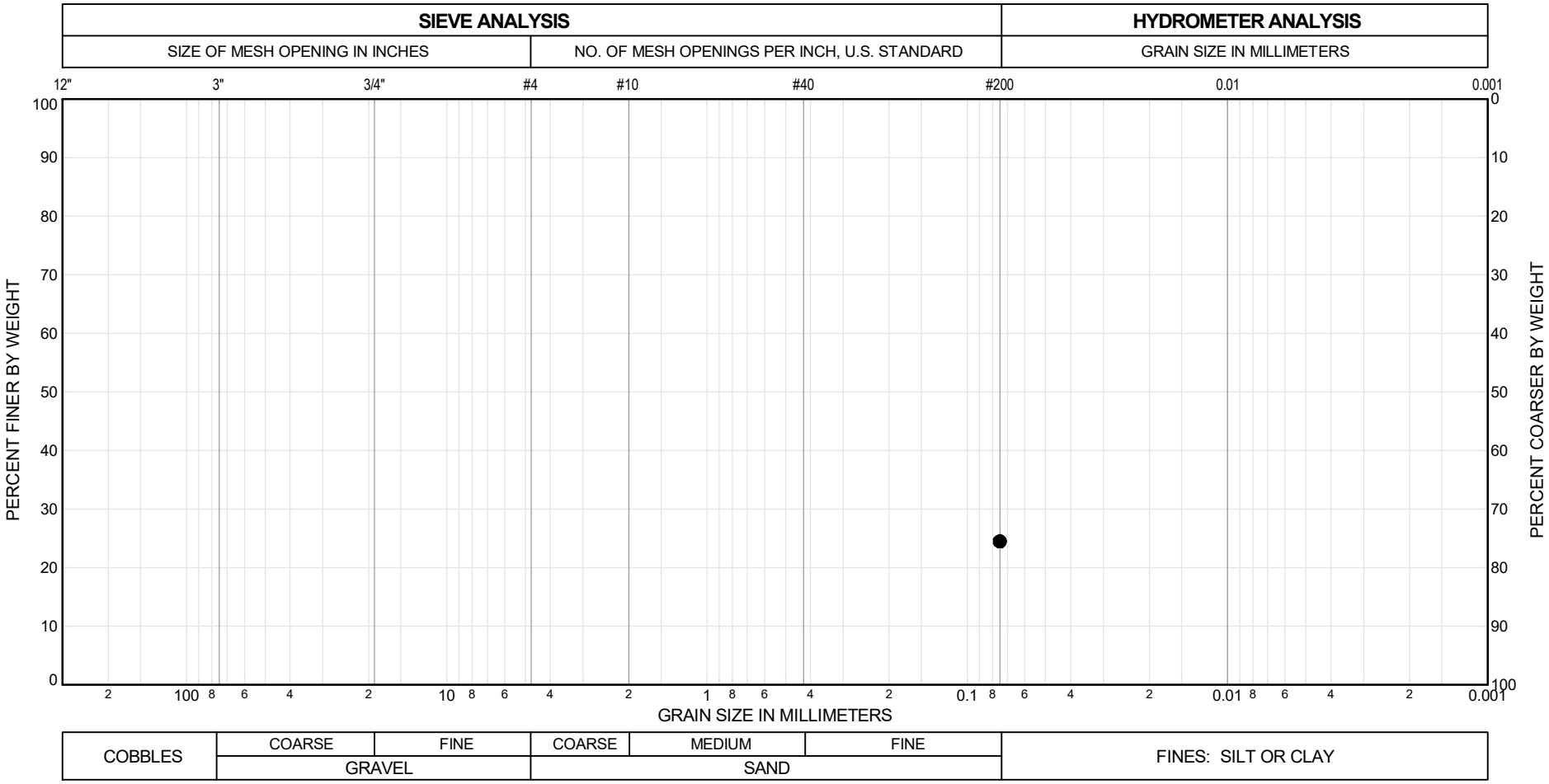

EXPLORATION AND SAMPLE NUMBER	DEPTH (feet)	UNIFIED SOIL CLASSIFICATION SYSTEM (USCS) GROUP NAME	USCS SYMBOL	GRAVEL %	SAND %	FINES %	NAT WC %	TEST BY/RVW	TEST STD	TEST NOTE
● SW-B2-02, S-7	25.0	SILTY SAND (SCHIST)	SM			24	2.9	JDT JYS	D1140	

* Where indicated by *, the USCS Group Name was based on visual-manual examination procedures (ASTM D2488) and the the grain size distribution.
ABBREVIATIONS: NAT WC = natural moisture content; RVW = reviewed by; STD = Standard; USCS = Unified Soil Classification System code; ~ = approximately (used when measured but not greater than 0.5%)

Job#: 113461-001 | Template Ver:1 | File: 113461_LODGEPOLE & NINEMILE.GPJ | Library: SW GINT LIBRARY.GLB | Date: 8/13/25

ATTERBERG LIMITS TEST RESULTS

USFS Lodgepole and Ninemile
Chelan County, Washington

Plasticity Chart

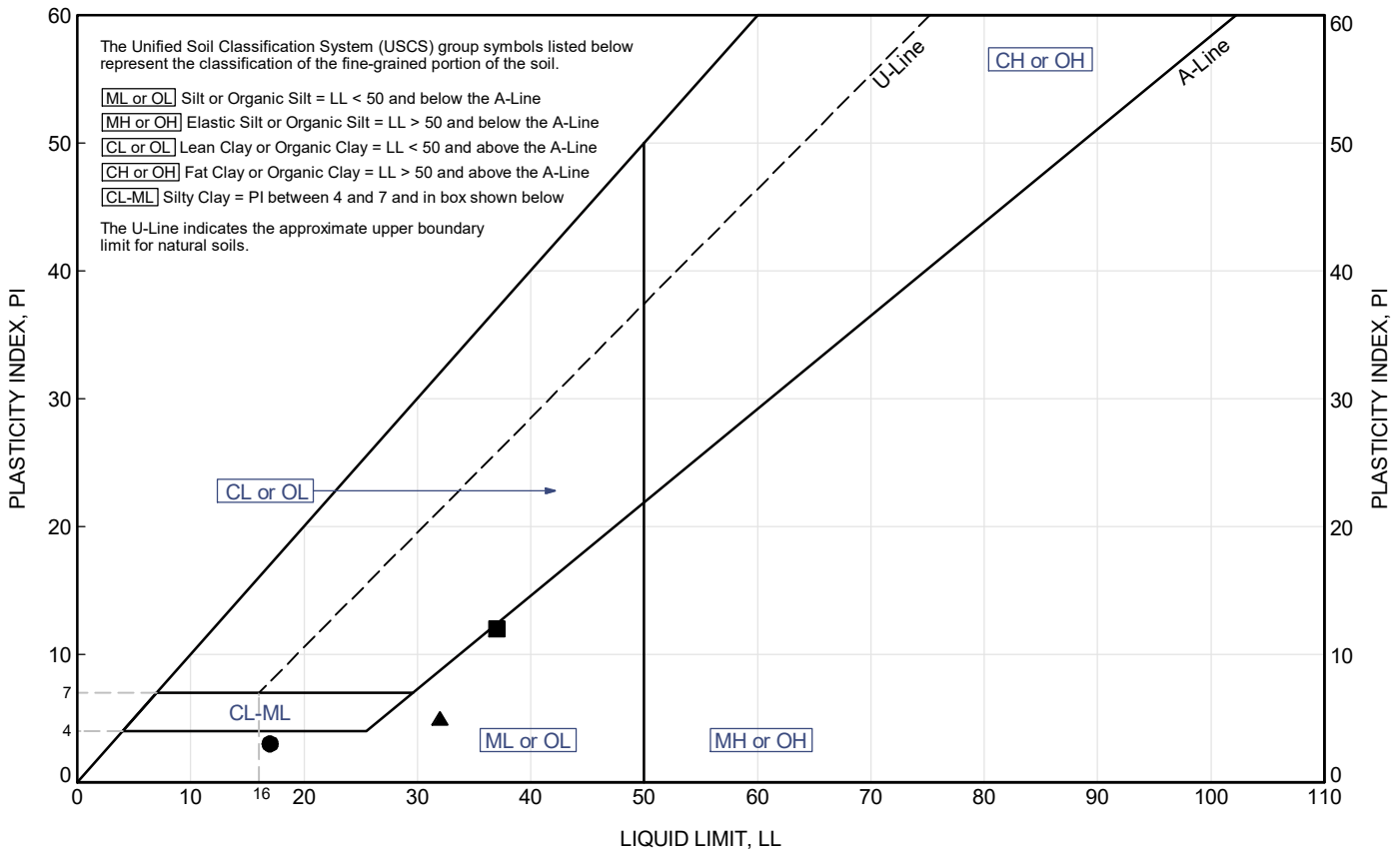

EXPLORATION AND SAMPLE NUMBER	DEPTH (feet)	UNIFIED SOIL CLASSIFICATION SYSTEM (USCS) GROUP NAME	USCS SYMBOL	LL	PL	PI	FINES (%)	NAT MC %	TEST BY/RVW	TEST STD	TEST NOTE
● SW-B2-01, S-6	25.0	SILTY SAND	SM	17	14	3	43	9.9	MKO ASW	T89,T90	
■ SW-B2-02, S-3	5.0	SILTY SAND	SM	37	25	12	32	8.7	JDT ASW	T89,T90	
▲ SW-B2-02, S-7	25.0	SILTY SAND (SCHIST)	SM	32	27	5	24	2.9	ASW ASW	T89,T90	

* Where indicated by *, the USCS Group Name was based on visual-manual examination procedures (ASTM D2488) and the Atterberg Limits test results.
ABBREVIATIONS: LL = liquid limit; NAT MC = natural moisture content; n/a = test attempted; NP = nonplastic; PI = plasticity index; PL = plastic limit; STD = standard; RVW = reviewed by; USCS = Unified Soil Classification System symbol

Job#: 113461-001 | Template Ver:1 | File: 113461_LODGEPOLE & NINEMILE.GPJ | Library: SW GINT LIBRARY.GLB | Date: 8/13/25

IMPORTANT INFORMATION

Important Information

About Your Geotechnical Report

IMPORTANT INFORMATION

CONSULTING SERVICES ARE PERFORMED FOR SPECIFIC PURPOSES AND FOR SPECIFIC CLIENTS.

Consultants prepare reports to meet the specific needs of specific individuals. A report prepared for a civil engineer may not be adequate for a construction contractor or even another civil engineer. Unless indicated otherwise, your consultant prepared your report expressly for you and expressly for the purposes you indicated. No one other than you should apply this report for its intended purpose without first conferring with the consultant. No party should apply this report for any purpose other than that originally contemplated without first conferring with the consultant.

THE CONSULTANT'S REPORT IS BASED ON PROJECT-SPECIFIC FACTORS.

A geotechnical/environmental report is based on a subsurface exploration plan designed to consider a unique set of project-specific factors. Depending on the project, these may include the general nature of the structure and property involved; its size and configuration; its historical use and practice; the location of the structure on the site and its orientation; other improvements such as access roads, parking lots, and underground utilities; and the additional risk created by scope-of-service limitations imposed by the client. To help avoid costly problems, ask the consultant to evaluate how any factors that change subsequent to the date of the report may affect the recommendations. Unless your consultant indicates otherwise, your report should not be used (1) when the nature of the proposed project is changed (for example, if an office building will be erected instead of a parking garage, or if a refrigerated warehouse will be built instead of an unrefrigerated one, or chemicals are discovered on or near the site); (2) when the size, elevation, or configuration of the proposed project is altered; (3) when the location or orientation of the proposed project is modified; (4) when there is a change of ownership; or (5) for application to an adjacent site. Consultants cannot accept responsibility for problems that may occur if they are not consulted after factors that were considered in the development of the report have changed.

SUBSURFACE CONDITIONS CAN CHANGE.

Subsurface conditions may be affected as a result of natural processes or human activity. Because a geotechnical/environmental report is based on conditions that existed at the time of subsurface exploration, construction decisions should not be based on a report whose adequacy may have been affected by time. Ask the consultant to advise if additional tests are desirable before construction starts; for example, groundwater conditions commonly vary seasonally.

Construction operations at or adjacent to the site and natural events such as floods, earthquakes, or groundwater fluctuations may also affect subsurface conditions and, thus, the continuing adequacy of a geotechnical/environmental report. The consultant should be kept apprised of any such events and should be consulted to determine if additional tests are necessary.

MOST RECOMMENDATIONS ARE PROFESSIONAL JUDGMENTS.

Site exploration and testing identifies actual surface and subsurface conditions only at those points where samples are taken. The data were extrapolated by your consultant, who then applied judgment to render an opinion about overall subsurface conditions. The actual interface between materials may be far more gradual or abrupt than your report indicates. Actual conditions in areas not sampled may differ from those predicted in your report. While nothing can be done to prevent such situations, you and your consultant can work together to help reduce their impacts. Retaining

IMPORTANT INFORMATION

your consultant to observe subsurface construction operations can be particularly beneficial in this respect.

A REPORT'S CONCLUSIONS ARE PRELIMINARY.

The conclusions contained in your consultant's report are preliminary, because they must be based on the assumption that conditions revealed through selective exploratory sampling are indicative of actual conditions throughout a site. Actual subsurface conditions can be discerned only during earthwork; therefore, you should retain your consultant to observe actual conditions and to provide conclusions. Only the consultant who prepared the report is fully familiar with the background information needed to determine whether or not the report's recommendations based on those conclusions are valid and whether or not the contractor is abiding by applicable recommendations. The consultant who developed your report cannot assume responsibility or liability for the adequacy of the report's recommendations if another party is retained to observe construction.

THE CONSULTANT'S REPORT IS SUBJECT TO MISINTERPRETATION.

Costly problems can occur when other design professionals develop their plans based on misinterpretation of a geotechnical/environmental report. To help avoid these problems, the consultant should be retained to work with other project design professionals to explain relevant geotechnical, geological, hydrogeological, and environmental findings, and to review the adequacy of their plans and specifications relative to these issues.

BORING LOGS AND/OR MONITORING WELL DATA SHOULD NOT BE SEPARATED FROM THE REPORT.

Final boring logs developed by the consultant are based upon interpretation of field logs (assembled by site personnel), field test results, and laboratory and/or office evaluation of field samples and data. Only final boring logs and data are customarily included in geotechnical/environmental reports. These final logs should not, under any circumstances, be redrawn for inclusion in architectural or other design drawings, because drafters may commit errors or omissions in the transfer process.

To reduce the likelihood of boring log or monitoring well misinterpretation, contractors should be given ready access to the complete geotechnical engineering/environmental report prepared or authorized for their use. If access is provided only to the report prepared for you, you should advise contractors of the report's limitations, assuming that a contractor was not one of the specific persons for whom the report was prepared, and that developing construction cost estimates was not one of the specific purposes for which it was prepared. While a contractor may gain important knowledge from a report prepared for another party, the contractor should discuss the report with your consultant and perform the additional or alternative work believed necessary to obtain the data specifically appropriate for construction cost estimating purposes. Some clients hold the mistaken impression that simply disclaiming responsibility for the accuracy of subsurface information always insulates them from attendant liability. Providing the best available information to contractors helps prevent costly construction problems and the adversarial attitudes that aggravate them to a disproportionate scale.

READ RESPONSIBILITY CLAUSES CLOSELY.

Because geotechnical/environmental engineering is based extensively on judgment and opinion, it is far less exact than other design disciplines. This situation has resulted in wholly unwarranted claims

IMPORTANT INFORMATION

being lodged against consultants. To help prevent this problem, consultants have developed a number of clauses for use in their contracts, reports, and other documents. These responsibility clauses are not exculpatory clauses designed to transfer the consultant's liabilities to other parties; rather, they are definitive clauses that identify where the consultant's responsibilities begin and end. Their use helps all parties involved recognize their individual responsibilities and take appropriate action. Some of these definitive clauses are likely to appear in your report, and you are encouraged to read them closely. Your consultant will be pleased to give full and frank answers to your questions.

The preceding paragraphs are based on information provided by the ASFE/Association of Engineering Firms Practicing in the Geosciences, Silver Spring, Maryland