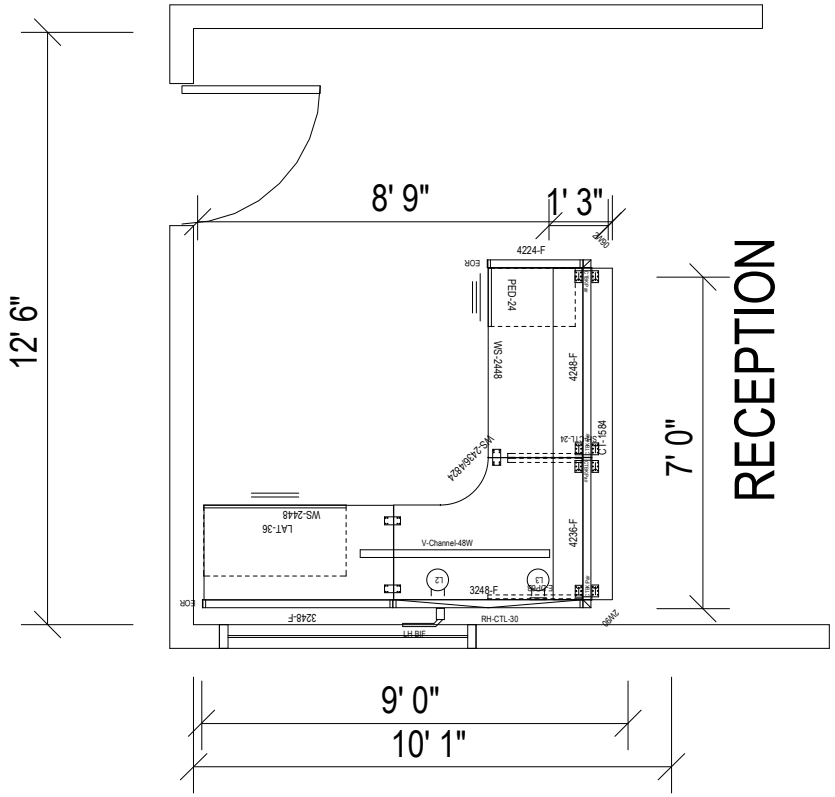
8' 9"
1' 3"
12' 6"
7' 0"
RECEPTION
9' 0"
10' 1"
4224-F
PED-24
WS-2448
4248-F
CT-15-84
CTL-24
WS-2436/4824
LAT-36
WS-2448
V-Channel-48W
4236-F
3248-F
3248-F
RH-CTL-30
LH BIF
EOR
EOR

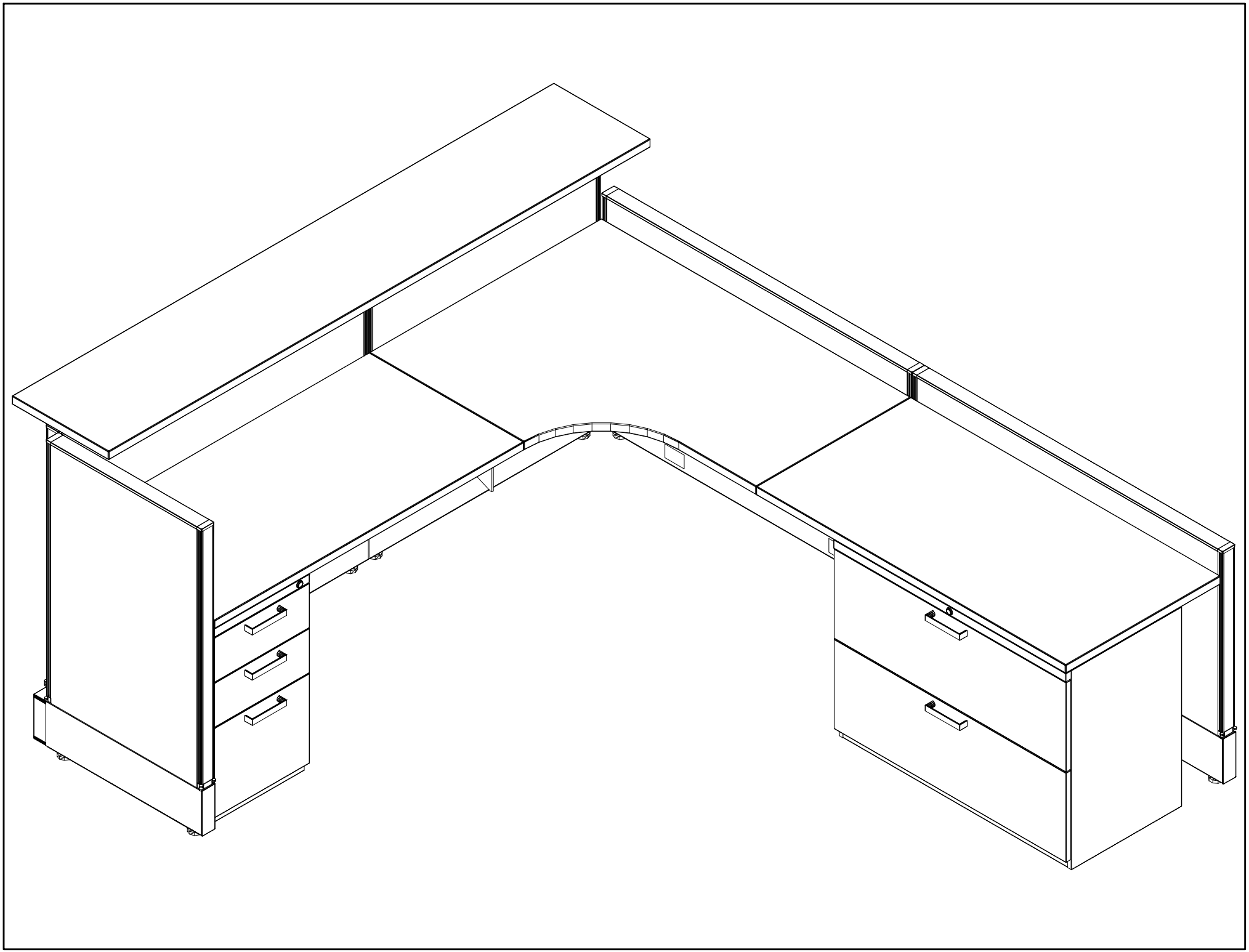

NAV SEA MAIN BUILDING REV 5

3.31.26

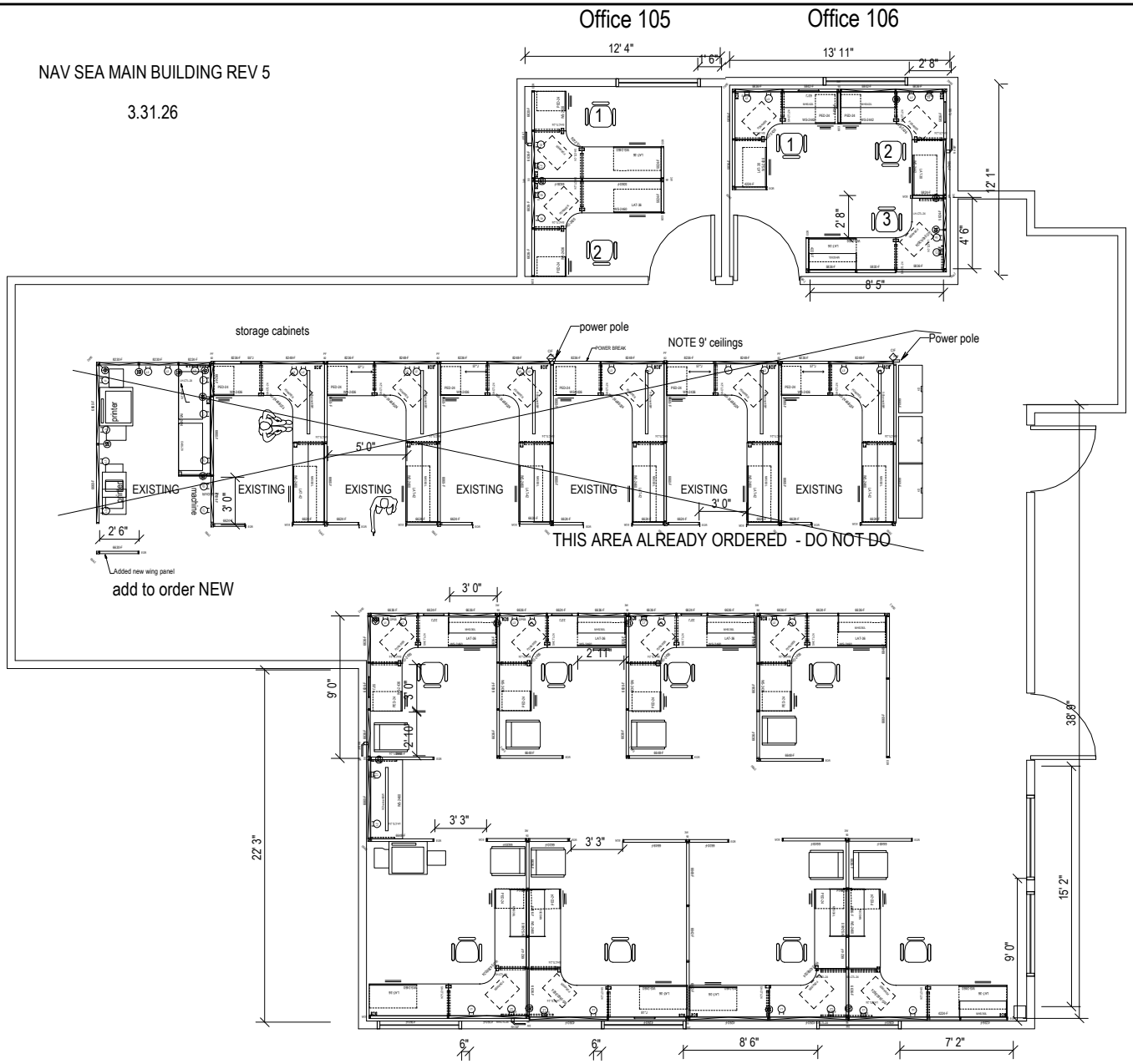

[redacted]