SPECIAL PACKAGING INSTRUCTION

CODE ID	SPI NO (TPO)
98748	F 01-139-4075 SHEET 1 OF 8

PART OR DRAWING NO.	NATIONAL STOCK NO.	CURR REV
305-100-208-0	2840-01-139-4075 PN	B

ITEM NOMENCLATURE
GEARBOX, ACCESSORY

ORIG DATE 08336

ILL	D. CHOI
PS	F. PITTMAN
CHK	T.C. JONES
ENGR	M. HEADLEE
AUTH	C. TROTTER

PRESERVATION IAW MIL-STD-2073
SERVICEABLE METHOD: 41
UNSERVICEABLE METHOD: 10
QUP 1
ICQ N/A
CLEANING & DRYING IAW MIL-STD-2073
PRESERVATIVE N/A
MARKING IAW MIL-STD-129

SPECIAL MARKINGS:
A) SPI NO. F 01-139-4075
B) REUSABLE CONTAINER AND DUNNAGE DO NOT DESTROY.
C) NOT FOR OUTSIDE STORAGE.

CLOSURE ASTM-D-6256

PACKING AS SPECIFIED BELOW AND BILL OF MATERIALS

LEVEL	SPEC	STYLE	TYPE	CL	VRTY	GR	TR
A	ASTM-D-6256	A	1	2	N/A	N/A	B
B	N/A	N/A	N/A	N/A	N/A	N/A	N/A

	LEVEL A	LEVEL B
GROSS CU FT	21.52	
GROSS WT LBS	274	
DESIGN FRAGILITY G	110	

	LENGTH	WIDTH	DEPTH
CNTNR I.D.	51	23 1/2	21
CNTNR O.D.	53 1/8	25 5/8	27 5/16
ITEM DIM	45	13 1/4	15 1/2
ITEM WT LBS	132		

NOTES:
1) ATTACH (22) TO (19) USING (35).
2) ATTACH (23) TO (20) USING (35).
3) ATTACH (12) TO (11) USING (35).
4) ATTACH (15) TO (14) USING (35).
5) ATTACH (30) TO (25) USING (35).

REVISIONS

LTR	DESCRIPTION	DATE
	NEW	08336
A	SIDE VIEW OF DUNNAGE MISSING FROM DRAWING	09061
B	CHANGING CUT OUT DIMENSION ON P/N 14 TO 7 1/4"	16095

PART NO.	QTY.	NOMENCLATURE OR DESCRIPTION	SIZE (INCHES UNLESS SPEC)	MATERIAL SPECIFICATION
15	1	CUSHION	32 X 4 1/2 X 1/4	A-A-59135 CL. 1, GR. A SEE NOTE 4
14	1	BLOCKING	23 3/8 X 14 X 1 1/2	A-A-55057 (DETAIL "B")
13	4	CARR. BOLT W, L/W & NUT	3/8 X 3	ASME B18.5
12	2	CUSHION	14 X 3 1/2 X 1	A-A-59136 CL. 1, GR. A SEE NOTE 3
11	2	BLOCKING	2 X 4 X 14	ASTM-D-6199
10	4	CARR. BOLT W, L/W & NUT	3/8 X 4 1/2	ASME B18.5
9	2	SIDEWALL	27 1/2 X 10 3/4 X 3/4	A-A-55057 (DETAIL "A")
8	4	SIDEWALL	2 X 4 X 24 1/2	ASTM-D-6199 (DETAIL "A")
7	4	SIDEWALL	2 X 4 X 10 3/4	ASTM-D-6199 (DETAIL "A")
6	6	CARR. BOLT W, L/W & NUT	3/8 X 4 1/2	ASME B18.5
5	2	HEADER	2 X 4 X 23 1/2	ASTM-D-6199
4	1	FLOOR	53 1/8 X 23 1/2 X 3/4	A-A-55057
3	3	SKID	2 X 4 X 53 1/8	ASTM-D-6199
2	6	RUBBING STRIP	10 X 3 1/2 X 3	ASTM-D-6199
1		CONTAINER I.D.	51 X 23 1/2 X 21	SEE LEVEL OF PACK

ALL WOODEN PALLETS AND WOOD CONTAINERS PRODUCED OF NON-MANUFACTURED WOOD SHALL BE CONSTRUCTED FROM HEAT TREATED (HT TO 56°C (CORE TEMPERATURE) FOR 30 MIN.) MATERIAL AND CERTIFIED BY AN ACCREDITED AGENCY RECOGNIZED BY THE AMERICAN LUMBER STANDARDS COMMITTEE (ALSC) IN ACCORDANCE WITH NON-MANUFACTURED WOOD PACKING POLICY AND NON-MANUFACTURED WOOD PACKING ENFORCEMENT REGULATIONS BOTH DATED MAY 30, 2001.

SPECIAL PACKAGING INSTRUCTION

CODE ID	SPI NO (TPO)
98748	F 01-139-4075

ITEM NOMENCLATURE

GEARBOX, ACCESSORY

PART NO.	QTY.	NOMENCLATURE OR DESCRIPTION	SIZE (INCHES UNLESS SPEC)	MATERIAL SPECIFICATION
16	4	CARR. BOLT W, L/W & NUT	3/8 X 3 1/2	ASME B18.5
17	4	SADDLE ASSY.	8 X 6 X 1 1/2	ASTM-D-6199 DETAILS "C" & "D"
18	4	SADDLE ASSY.	8 X 6 X 3/8	A-A-55057 DETAILS "C" & "D"
19	1	SADDLE ASSY.	8 3/4 X 6 X 1/2	A-A-55057 DETAIL "C"
20	1	SADDLE ASSY.	7 1/2 X 6 X 1/2	A-A-55057 DETAIL "D"
21	1	SADDLE ASSY.	31 3/4 X 6 3/4 X 1/2	A-A-55057 DETAIL "E"
22	1	CUSHION	8 3/4 X 6 X 1/4	A-A-59135 CL. 1, GR. A SEE NOTE 1
23	1	CUSHION	7 1/2 X 6 X 1/4	A-A-59135 CL. 1, GR. A SEE NOTE 2
24	2	CARR. BOLT W, L/W & NUT	3/8 X 3 1/2	ASME-B18.5
25	1	HOLD DOWN	2 X 4 X 23 3/8	ASTM-D-6199 DETAIL "F"
26	1	HOLD DOWN	2 X 4 X 7 1/4	ASTM-D-6199 DETAIL "F"
27	1	HOLD DOWN	2 X 4 X 4 7/8	ASTM-D-6199 DETAIL "F"
28	1	HOLD DOWN	7 1/4 X 3 1/2 X 3/4	A-A-55057 DETAIL "F"
29	1	HOLD DOWN	4 7/8 X 3 1/2 X 3/4	A-A-55057 DETAIL "F"
30	1	CUSHION	17 X 3 1/2 X 1/4	A-A-59135
31	2	CARR. BOLT W, L/W & NUT	3/8 X 6	ASME B18.5
32	1	WRAP	62 X 60	MIL-PRF-121 TY. I
33	1	CUSHION	1/4 IN. AS REQUIRED	A-A-59135 CL. 1 GR. A
34	1	BARRIER BAG	AS REQUIRED	MIL-PRF-131 CL. 1
35	A/R	ADHESIVE	AS REQUIRED	A-A-59692

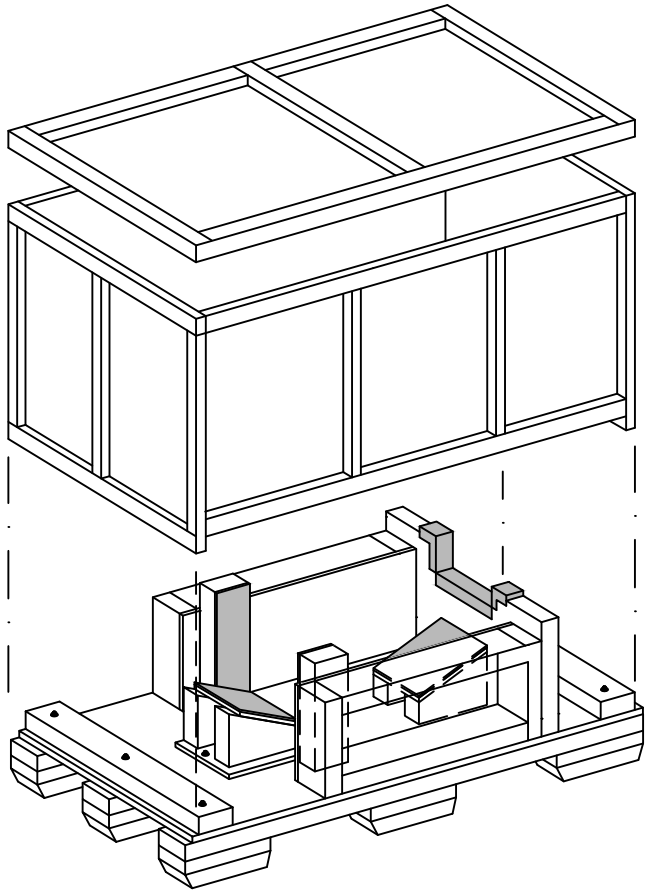

SPECIAL PACKAGING INSTRUCTION	CODE ID 98748	SPI NO (TPO) F 01-139-4075
ITEM NOMENCLATURE GEARBOX, ACCESSORY		SHEET 3 OF 8

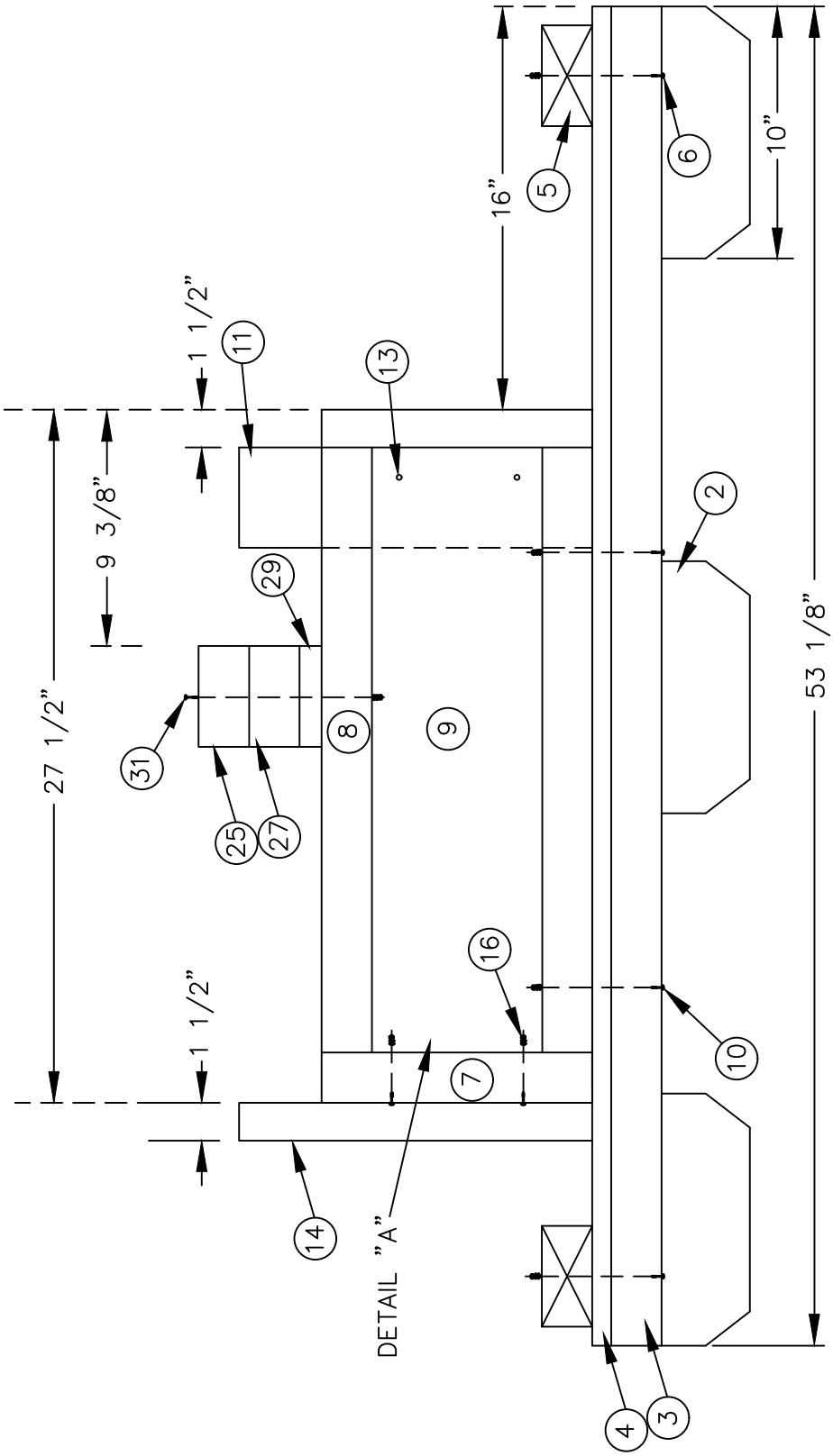

SPECIAL PACKAGING INSTRUCTION	CODE ID 98748	SPI NO (TPO) F 01-139-4075
ITEM NOMENCLATURE GEARBOX, ACCESSORY		SHEET 4 OF 8

DETAIL "A"

(7)(8)(9) SIDEWALL

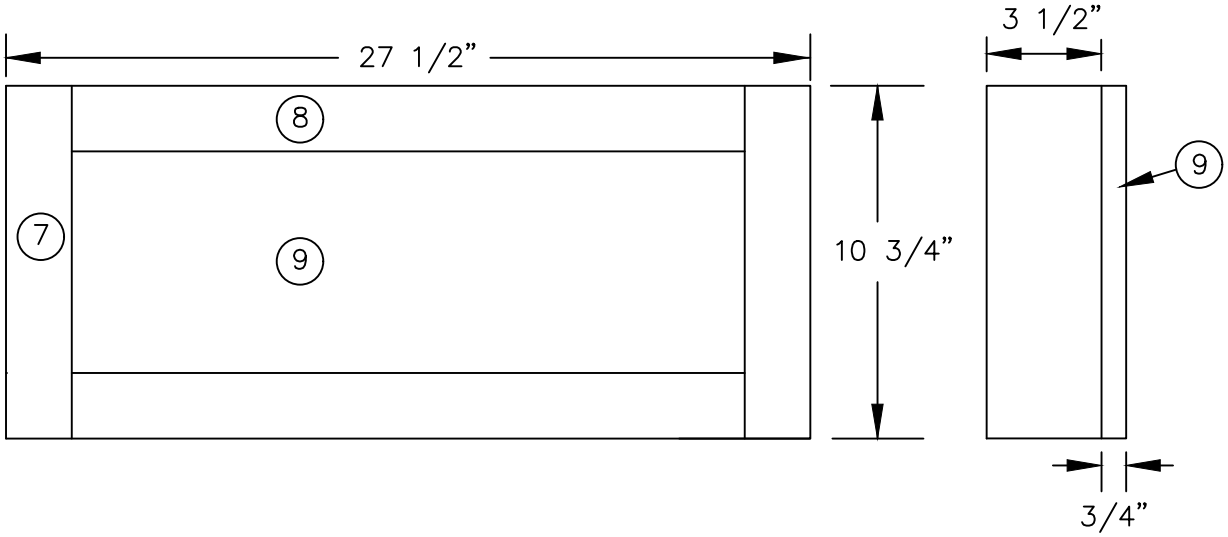

DETAIL "B"

(14) BLOCKING

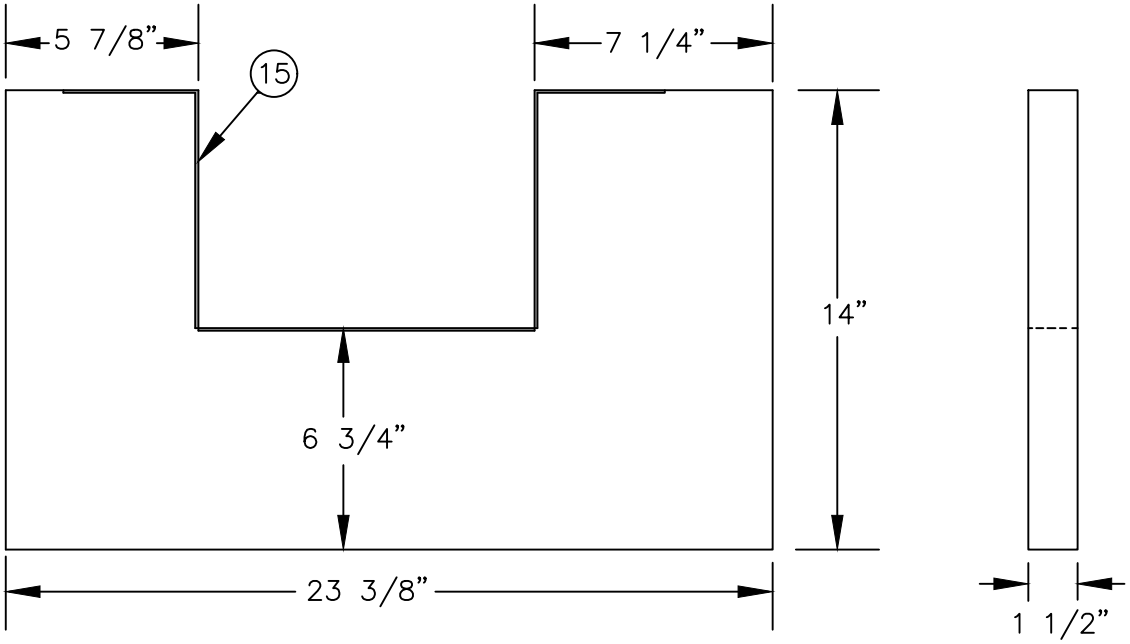

SPECIAL PACKAGING INSTRUCTION	CODE ID 98748	SPI NO (TPO) F 01-139-4075
ITEM NOMENCLATURE GEARBOX, ACCESSORY		SHEET 5 OF 8

DETAIL "F"

(25)(26)(27)(28)(29)(30) HOLD DOWN

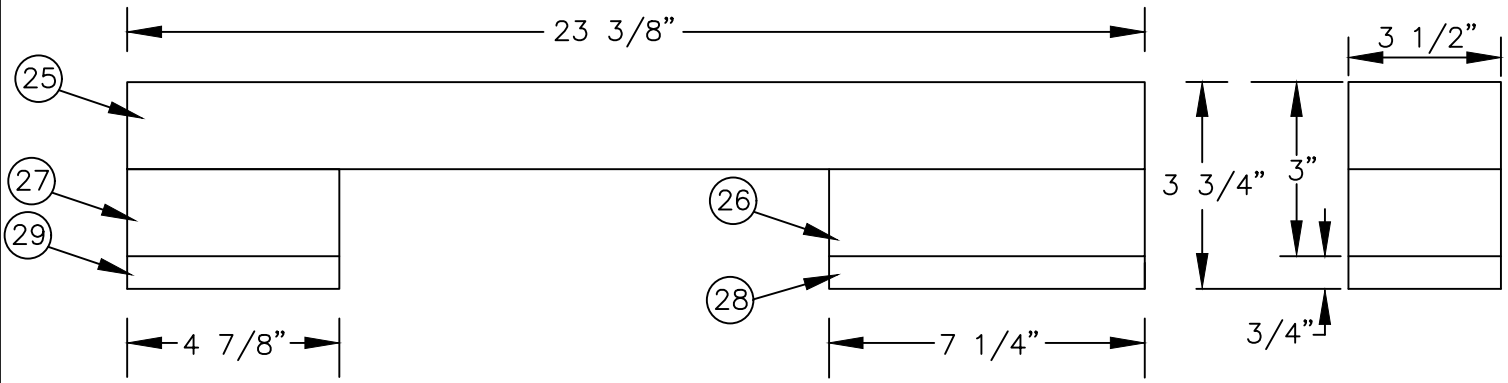

SIDE VIEW

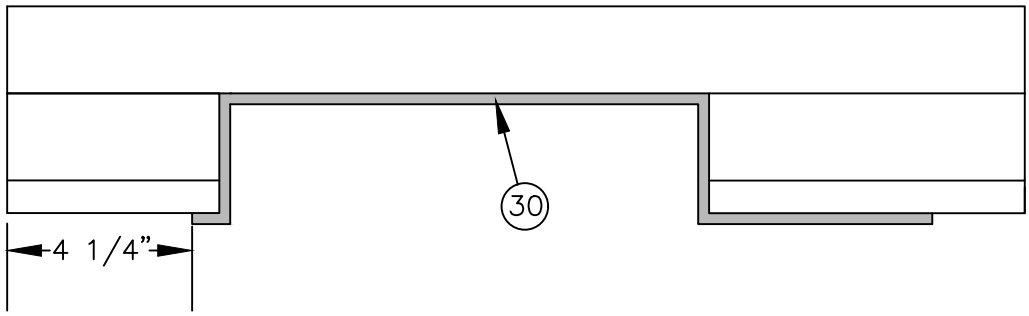

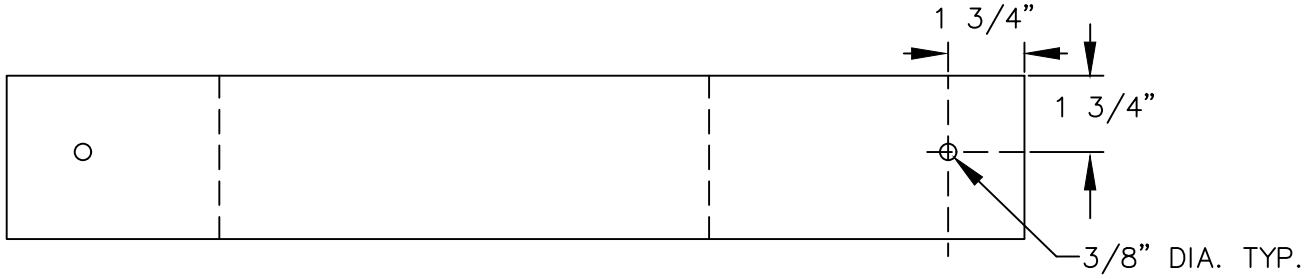

TOP VIEW

DETAIL "E"

(21) SADDLE ASSEMBLY

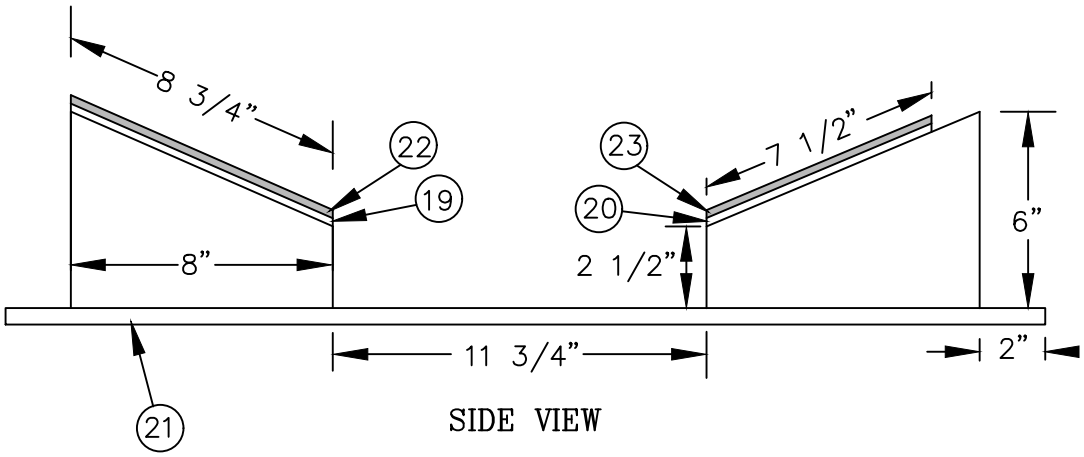

SIDE VIEW

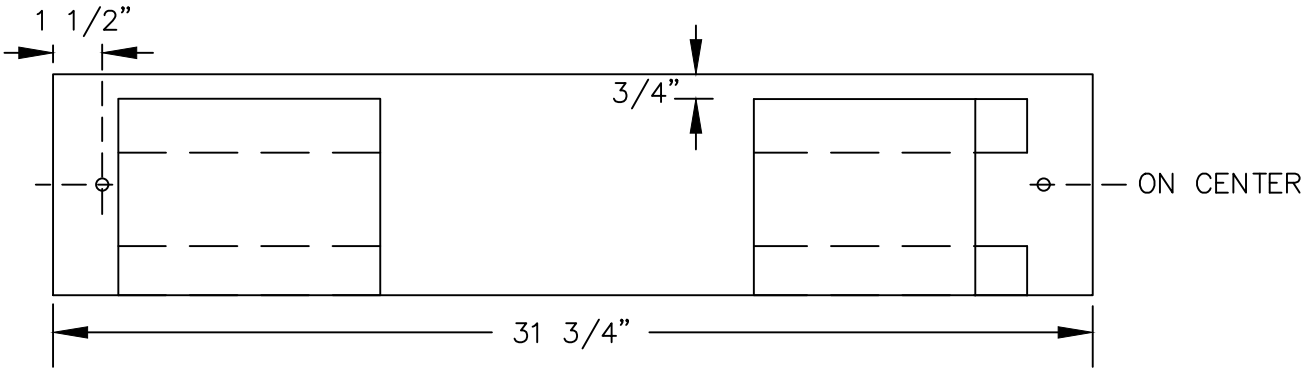

TOP VIEW

SPECIAL PACKAGING INSTRUCTION	CODE ID 98748	SPI NO (TPO) F 01-139-4075
ITEM NOMENCLATURE GEARBOX, ACCESSORY		SHEET 7 OF 8

DETAIL "C"

(17)(18)(19) SADDLE ASSEMBLY

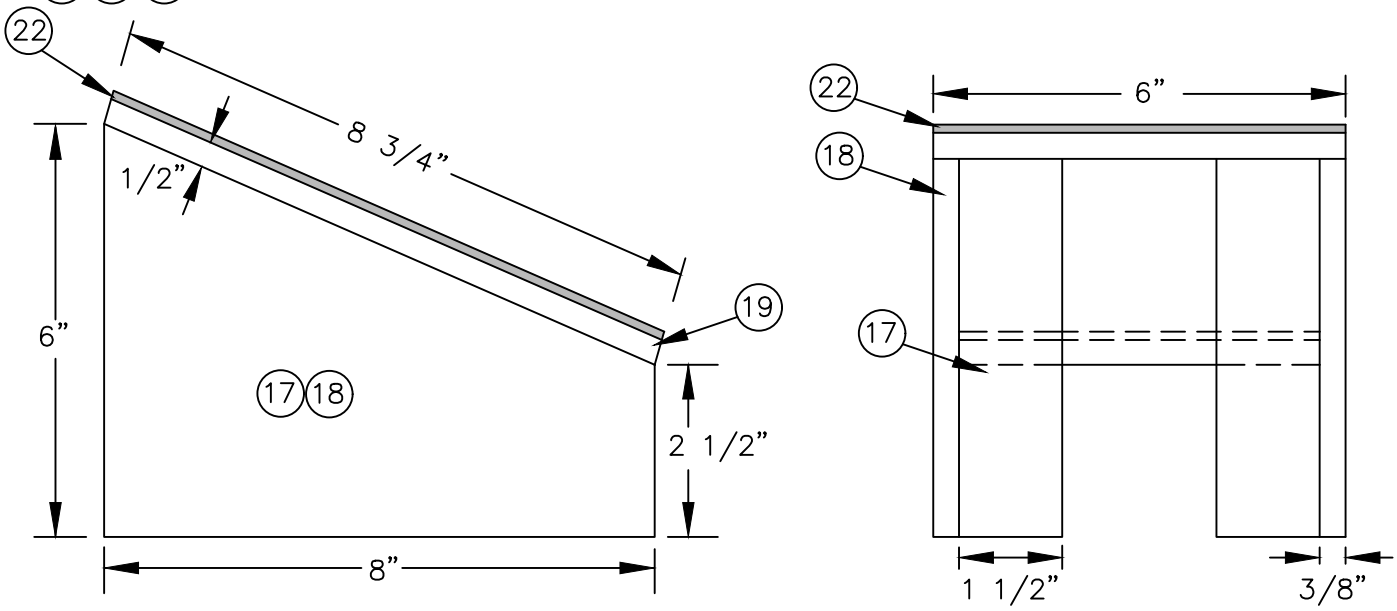

DETAIL "D"

(17)(18)(20) SADDLE ASSEMBLY

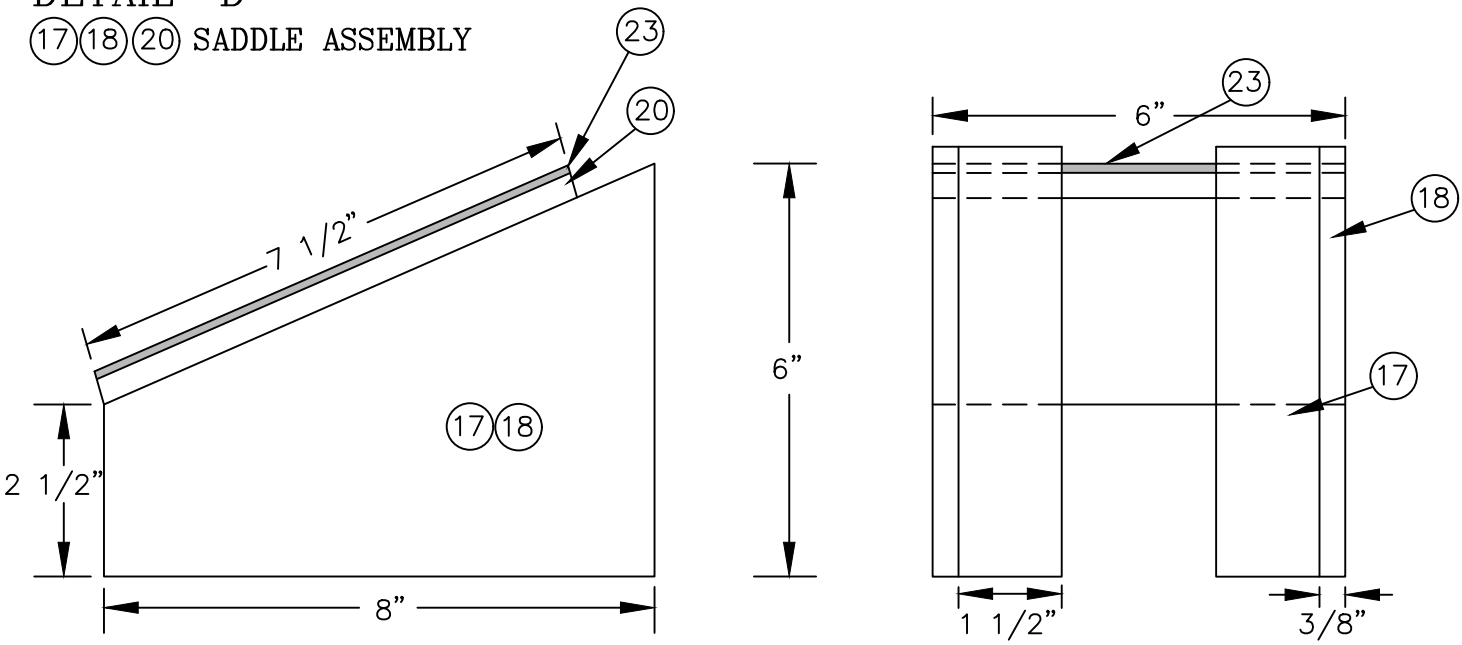
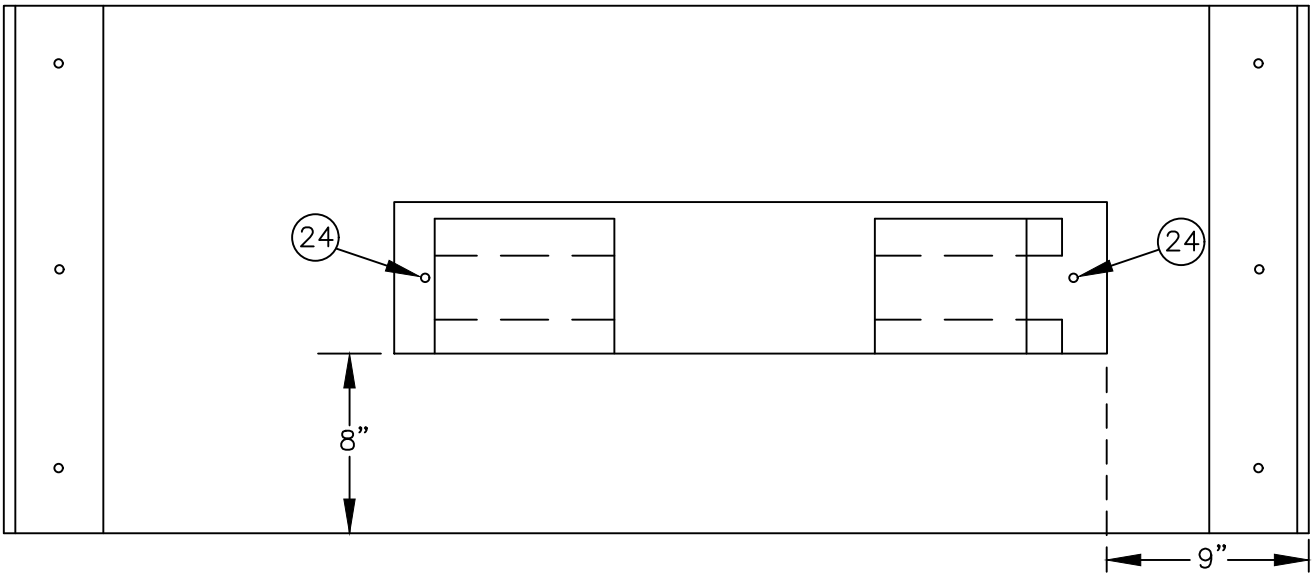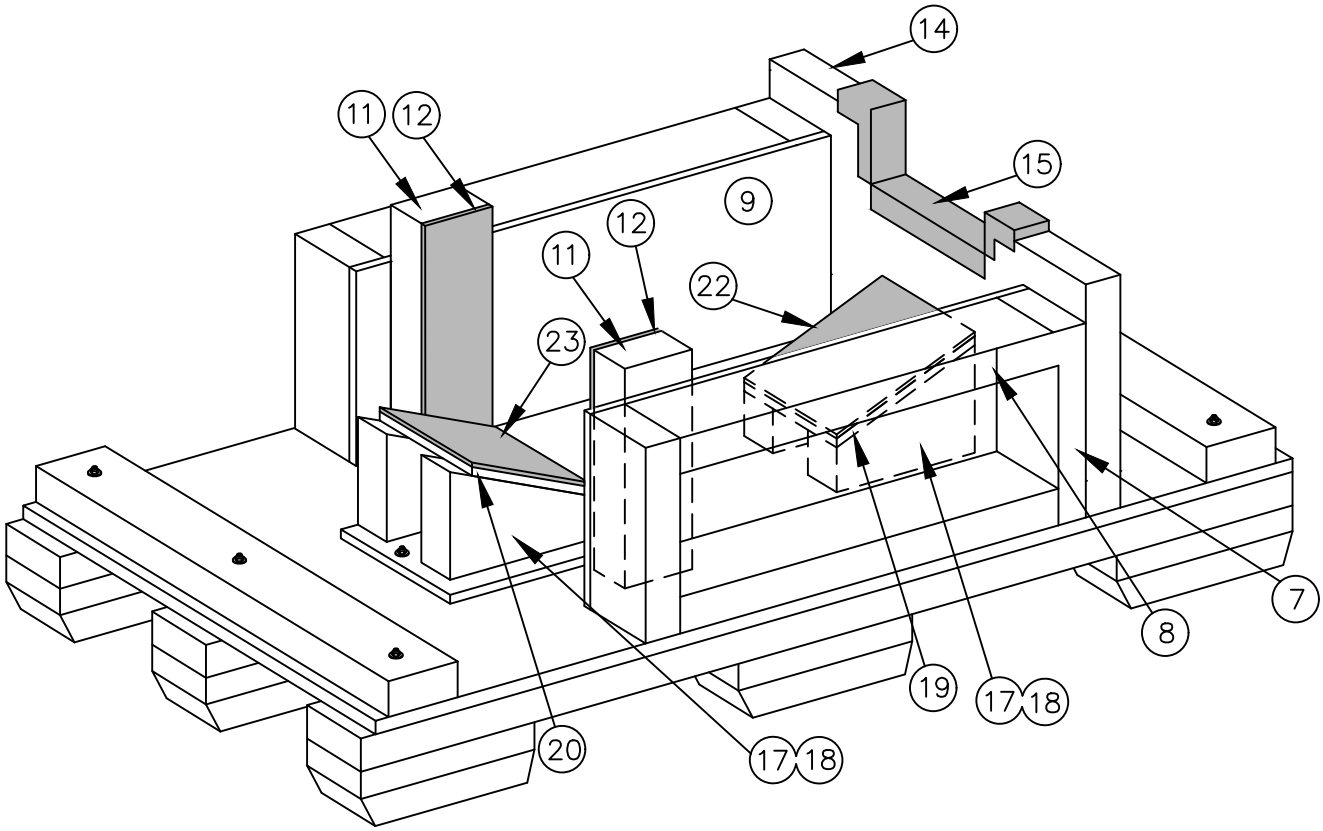
SPECIAL PACKAGING INSTRUCTION	CODE ID 98748	SPI NO (TPO) F 01-139-4075
ITEM NOMENCLATURE GEARBOX, ACCESSORY		SHEET 8 OF 8