SPECIAL PACKAGING INSTRUCTION

CODE ID	SPI NO (TPO)
98748	F 01-015-9798
	SHEET 1 OF 3

PART OR DRAWING NO.	NATIONAL STOCK NO.	CURR REV		
501-1152-01	6610-01-015-9798 XV	F	ILL	P. BROWNING
ITEM NOMENCLATURE		ORIG DATE	PS	C. QUICK
INDICATOR, ATTITUDE		77286	CHK	T.C. JONES
			AUTH	C. TROTTER

PRESERVATION IAW MIL-STD-2073
SERVICEABLE METHOD: 42
UNSERVICEABLE METHOD: 10 ▷1

QUP 001

ICQ 000

CLEANING & DRYING IAW MIL-STD-2073

PRESERVATIVE N/A

MARKING IAW MIL-STD-129

SPECIAL MARKINGS:
A) SPI NO. F 01-015-9798
B) REUSABLE CONTAINER AND DUNNAGE DO NOT DESTROY
C) NOT FOR OUTSIDE STORAGE.
D) DELICATE INSTRUMENT AND ARROWS UP.
E) FRAGILE.

CLOSURE
LEVEL A: N/A
LEVEL B: ASTM-D-1974

PACKING AS SPECIFIED BELOW AND BILL OF MATERIALS

LEVEL	SPEC	STYLE	TYPE	CL	VRTY	GR	TR
A	N/A	N/A	N/A	N/A	N/A	N/A	N/A
B	ASTM-D-5118	RSC	CF	WR	SW	W5C	N/A

	LEVEL A	LEVEL B
GROSS CU FT	N/A	1.22
GROSS WT LBS	N/A	14.2
DESIGN FRAGILITY G	N/A	N/A

	LENGTH	WIDTH	DEPTH
CNTNR I.D.			
LEVEL A:	N/A	N/A	N/A
LEVEL B:	10 3/8	10 3/8	18 5/8
CNTNR O.D.			
LEVEL A:	N/A	N/A	N/A
LEVEL B:	10 3/4	10 3/4	19 3/8
ITEM DIM	3	3	9
ITEM WT LBS	4 LBS.		

NOTES:

1) BARRIER BAG MAY BE OMITTED FOR RETURN OF REPAIRABLE ASSETS.

2) ADHERE P/N 2 TO P/N 3 USING ADHESIVE, P/N 11 .

* ALTERNATE PACK: J.E.T. DRAWING 598-1000

REVISIONS		
LTR	DESCRIPTION	DATE
	NEW	77286
A	REVISED	78142
B	REVISED	79045
C	REVISED	84075
D	COMPLETE REWORK	00096
E	UPDATE SPECS & ADD ALTERNATE PACK	09271
F	CHANGED P/N 2, 3, & 6 AND ADDED FRAGILE MARKINGS	14307

PART NO.	QTY.	NOMENCLATURE OR DESCRIPTION	SIZE (INCHES UNLESS SPECIFIED) TOLERANCES ON FRAC. ± 1/8, DECIMAL ± .10, ANGLES ± 1°.	MATERIAL SPECIFICATION
11	A/R	ADHESIVE	AS REQUIRED	QPL-MMM-A-1617
10	1	SPACER, TOP	3 7/8 X 3 7/8 X 1 3/4	A-A-59136
9	1	BLOCKING	3 7/8 X 3 7/8 X 1 3/4	A-A-59136 DETAIL "C"
8	1	WRAP	26 X 14	A-A-3174
7	1	CUSHIONING	SIZE AS REQUIRED	PPP-C-1797
6	1	SPACER, BOTTOM	3 7/8 X 3 7/8 X 1	A-A-59136
5	1	INTERIOR CARTON	I.D. 4 X 4 X 12	ASTM-D-5118 RSC, CF, WR, SW, W5C
4	1	BARRIER BAG	37 X 21	MIL-PRF-131
3	2	TOP & BOTTOM CUT-OUT	10 3/8 X 10 3/8 X 3	MIL-PRF-26514 GR. C DETAIL "B"
2	2	TOP & BOTTOM PAD	10 3/8 X 10 3/8 X 3	MIL-PRF-26514 GR. C DETAIL "A"
1	1	CONTAINER I.D.	10 3/8 X 10 3/8 X 18 5/8	SEE LEVEL OF PACK

SPI NO. F 01-015-9798

SPECIAL PACKAGING INSTRUCTION	CODE ID 98748	SPI NO (TPO) F 01-015-9798
ITEM NOMENCLATURE INDICATOR, ATTITUDE		SHEET 2 OF 3

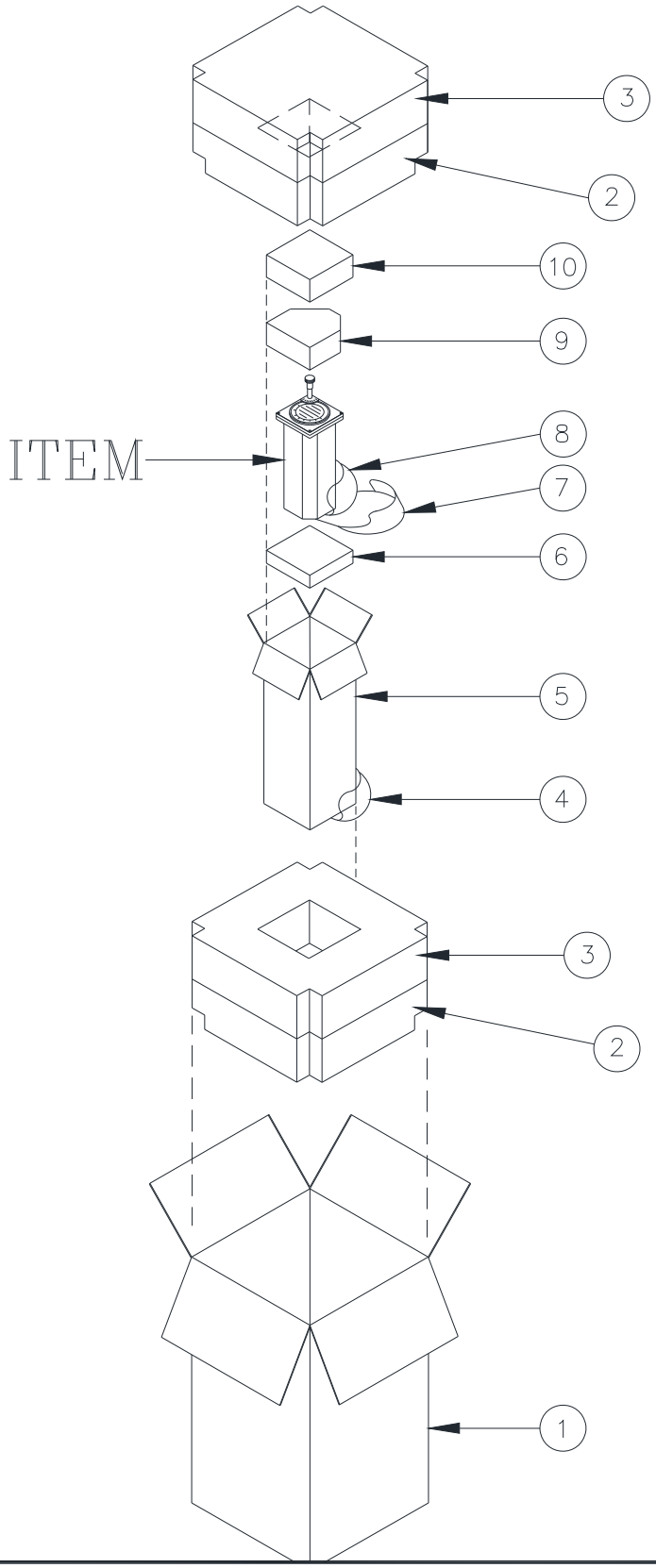

DD form MAR 87 2169 MOD

COMPUTER GENERATED

SPECIAL PACKAGING INSTRUCTION	CODE ID 98748	SPI NO (TPO) F 01-015-9798
ITEM NOMENCLATURE INDICATOR, ATTITUDE		SHEET 3 OF 3

DETAIL "A" (2)

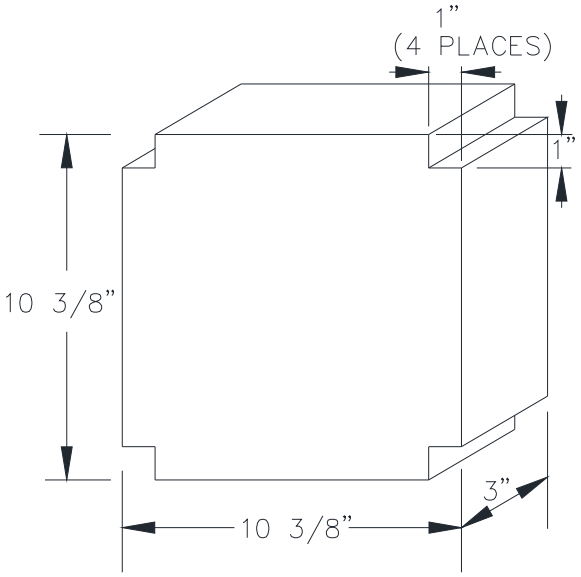

DETAIL "B" (3)

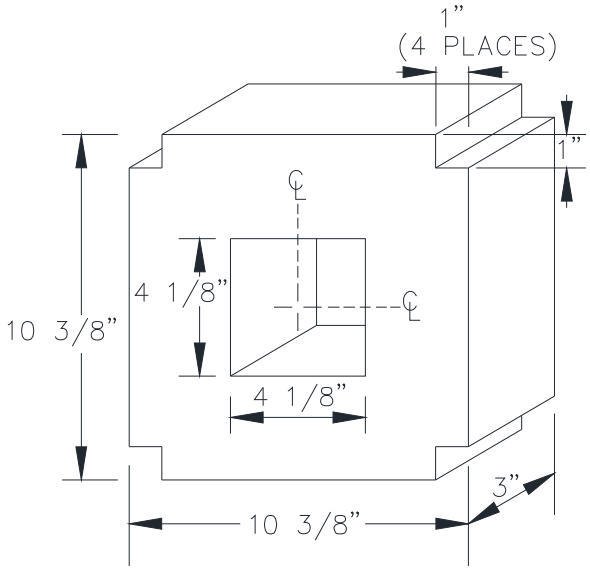
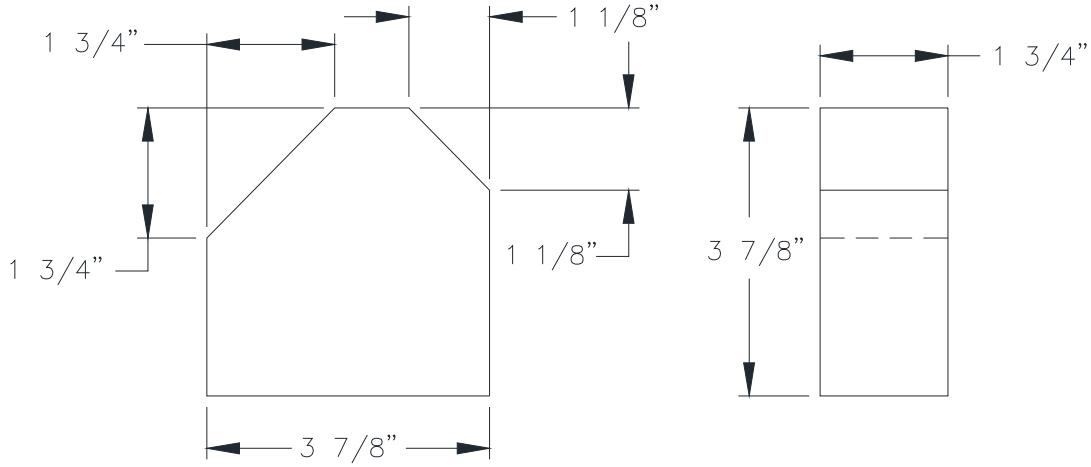
DETAIL "C" (9)
BLOCKING