PROJECT	SHEET NUMBER
MT PRAIRIE 2016(3)	A.1

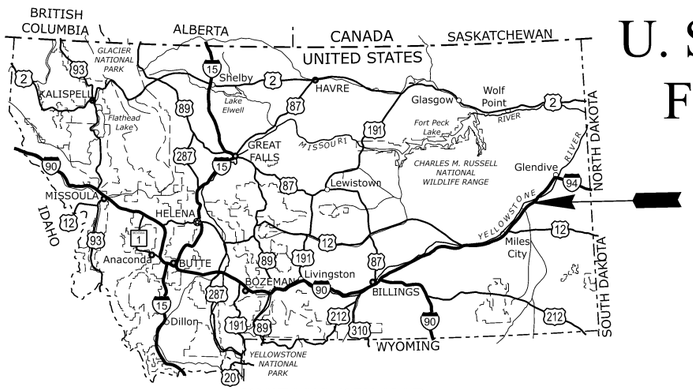

MONTANA KEY MAP

U. S. DEPARTMENT OF TRANSPORTATION
FEDERAL HIGHWAY ADMINISTRATION

PLANS FOR PROPOSED PROJECT

MT PRAIRIE 2016(3)

MILWAUKEE BRIDGE RESURFACING AND REHABILITATION

PRAIRIE COUNTY
MONTANA

LENGTH 0.35 MILES

PROJECT LOCATION
See Sheet A.4

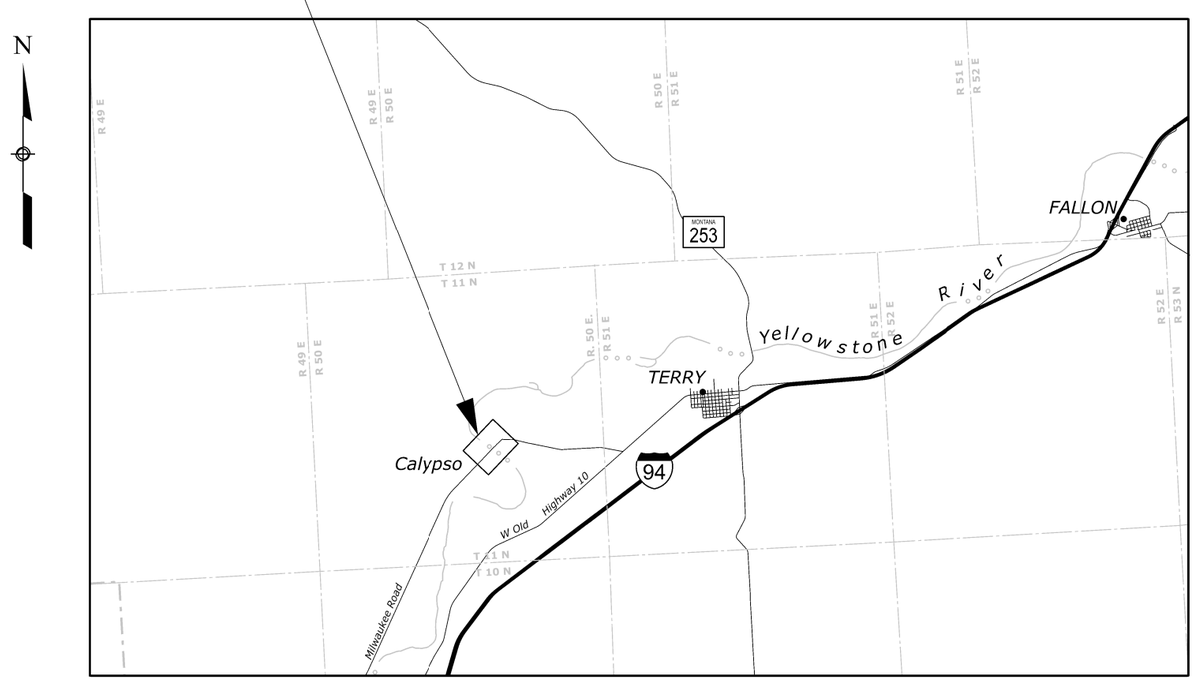

Scale in miles

1 0 1 2 3

TYPE OF CONSTRUCTION:

Bridge deck and bridge rail replacement, pier repair, subexcavation, grading, aggregate surfacing, and riprap.

DESIGN DESIGNATION:

ADT (2024)	*<400*
ADT (2044)	*<400*
V	*40 MPH*
e (max)	*6%*

SPECIFICATION:

Standard Specifications for Construction of Roads and Bridges on Federal Highway Projects, FP-14

SECTION INDEX

A. GENERAL INFORMATION
B. SUMMARY OF QUANTITIES
C. TYPICAL SECTION
D. MAINLINE
E. APPROACH
F. SOIL EROSION AND SEDIMENT CONTROL
G. HYDRAULICS
H. TEMPORARY TRAFFIC CONTROL
I. PERMANENT TRAFFIC CONTROL
S. BRIDGE

See Sheet A.2 for complete Sheet Index

PLANS PREPARED BY
U.S. DEPARTMENT OF TRANSPORTATION
FEDERAL HIGHWAY ADMINISTRATION
WESTERN FEDERAL LANDS HIGHWAY DIVISION
VANCOUVER, WASHINGTON

PROJECT MANAGER
J. KEY

APPROVED:

BRENT LEE COE Digitally signed by BRENT LEE COE
Date: 2026.06.17 13:52:37 -07'00'

Chief of Engineering, Western Federal Lands Highway Division — *DATE*

c:\pw_work\wfl\d0592470\mt-a-prai201603_aa.dgn [Title Sheet]
24 April 2026 12:40 PM

SHEET INDEX

A. GENERAL INFORMATION
A.1 TITLE SHEET
A.2 INDEX TO SHEETS
A.3 PLAN SYMBOLS AND ABBREVIATIONS
A.4 VICINITY MAP

B. SUMMARY OF QUANTITIES
B.1-2 SUMMARY OF QUANTITIES

C. TYPICAL SECTION
C.1 TYPICAL SECTION

D. MAINLINE
D.1 SURVEY CONTROL
D.2 TABULATION OF MAINLINE QUANTITIES
D.3 EARTHWORK SUMMARY
D.4-7 "MAIN 01" PLAN-PROFILE

E. APPROACH
E.1 TABULATION OF APPROACH QUANTITIES
E.2 "APPR 01" PLAN-PROFILE

F. SOIL EROSION AND SEDIMENT CONTROL
F.1 TABULATION OF SOIL EROSION AND SEDIMENT CONTROL QUANTITIES
F.2-4 SOIL EROSION AND SEDIMENT CONTROL PLANS
F.5 FIBER ROLL

G. HYDRAULICS
G.1 TABULATION OF HYDRAULIC QUANTITIES
G.2 PIER #4 SCOUR COUNTERMEASURE DETAILS
G.3 PIER #4 SCOUR RIPRAP PROTECTION LAYOUT

H. TEMPORARY TRAFFIC CONTROL
H.1 TABULATION OF TEMPORARY TRAFFIC CONTROL QUANTITIES
H.2 ADVANCE SIGNING
H.3 SIGN INSTALLATION WOOD POSTS
H.4 ROAD CLOSURE AT BRIDGE DETAIL
H.5 ROAD CLOSURE SIGNS

SHEET INDEX (continued)

I. PERMANENT TRAFFIC CONTROL
I.1 TABULATION OF PERMANENT TRAFFIC CONTROL QUANTITIES
I.2-3 PERMANENT TRAFFIC CONTROL PLANS
I.4 PERMANENT SIGN INSTALLATION WOOD POST
I.5 MONTANA DELINEATORS

S. BRIDGE
S.1 PLAN AND ELEVATION
S.2 GENERAL NOTES
S.3 SINGLE SPAN PLAN AND ELEVATION
S.4 TYPICAL SECTION
S.5 BENT CLEANUP PLAN
S.6 BENT IMPROVEMENTS
S.7 DECK FRAMING LAYOUT
S.8 TYPICAL SECTION DETAILS
S.9 DECK PANEL LAYOUT
S.10 DECK PANEL STUD SPACING
S.11 EXPANSION BOLT SPACING
S.12 RAIL POST DETAILS
S.13 RAIL POST CLEARANCE DETAILS

PROJECT	SHEET NUMBER
MT PRAIRIE 2016(3)	A.3

Δ	total central angle
Δc	curve central angle
Ø	diameter
θs	spiral central angle
abut.	abutment
ADT	average daily traffic
AH	ahead
appr.	approach
BK	back
b.f.	back face
BM	bench mark
BP	balance point
br.	bridge
brg.	bearing
btwn	between
cc or c. to c.	center to center
℄	centerline
clr.	clear
CMP	corrugated metal pipe
col.	column
conc.	concrete
conn.	connection
constr. jt.	construction joint
cont.	continuous
CS	point of curve to spiral
ctrs.	centers
CUFT	cubic foot (feet)
culv.	culvert
CUYD	cubic yard(s)
D	diameter
DHV	design hourly volume
dia.	diameter
diaph.	diaphragm
dist.	distance
drwg(s).	drawing(s)
E	east
e	superelevation rate
e.f.	each face
El. 94.16	elevation in feet
elev.	elevation
emb.	embankment
EOP	edge of pavement
EQ or eq.	equation
EW	edge of water
exc.	excavation
exp. jt.	expansion joint
f.f.	front face
fin.	finish
flg.	flange
ftg.	footing
ga.	gage (gauge)
galv.	galvanized
ID	inside diameter
IE	invert elevation
jt.	joint
KSI	thousand pounds per square inch
L	length of curve
lat.	latitude
LNFT	linear foot (feet)
long.	longitudinal
LPSM	lump sum
Ls	length of spiral
lt. or LT	left
LW	low water
M.L.	main line
M.P.	mile post
matl.	material
max.	maximum
MGAL	thousand gallon
min.	minimum
mon.	monument
N	north
NC	normal crown
o.c.	on center
o. to o.	out to out
OD	outside diameter
OG	original ground
OHWM	ordinary high water mark
PC	point of curve
PCC	point of compound curve
PCS	point of curve to spiral
PI	point of intersection
pl.	plate
POC	point on curve
POS	point on spiral
POT	point on tangent
PS	point of tangent to spiral
PSF	pounds per square foot
PSI	pounds per square inch
PSC	point of spiral to curve
PST	point of spiral to tangent
PT	point of tangent
pvmt.	pavement
R	radius
R.	range
R/W	right-of-way
rdwy.	roadway
reinf.	reinforcement
reqd.	required
rt. or RT	right
rte.	route
S	south
SADT	seasonal average daily traffic
SC	point of spiral to curve
sect.	section
shldr.	shoulder
SLRY	slurry unit
spa.	spacing, spaces or spaced
SQFT	square foot
SQYD	square yard
SRS	point of spiral to reverse spiral
SS	point of spiral to spiral (no curve)
ST	point of spiral to tangent
STA, Sta.	station
std.	standard
stgr.	stringer
stiff.	stiffener
struc.	structural
STS	point of spiral to tangent spiral
T	tangent distance
T.	township
TBM	temporary bench mark
thd.	thread
TS	point of tangent to spiral
Ts	tangent distance (spiraled curve)
typ.	typical
V	design speed (velocity)
vph	vehicles per hour
VPI	vertical point of intersection
W	west

NOTE:

1. Other symbols used in the plans will be shown in a legend on the appropriate plan sheet.

National Boundary
State Boundary
County Boundary
City Boundary
Township or Range Line
Section Line
Section Corner (Found, Projected)
¼ Section Line
¼ Section Corner (Found, Projected)
1/16 Section Line
1/16 Section Corner (Found, Projected)
Property Line
Parcel Number
National Park Boundary
National Forest Boundary
National Wildlife Refuge Boundary
BLM Lands Boundary
Indian Reservation Boundary
Existing Roadway (Paved, Gravel)
Railroad
Trail
Fiber Roll
Silt Fence
Sandbag
Intermittent Drainage or Small Creek
Large Creek or River
Lake, Pond or Reservoir; Marshland
Spring or Seep
Treeline; Individual Trees
Material Source; Bore Hole; Test Pit
Spot Elevation; Coordinate Grid Tick
Above Ground Tank; Underground Tank
Boulder; Well; Antenna; Grave
Cooking Grate; Garbage Can; Picnic Table
Flagpole; Fire Hydrant
Gas & Water Meter; Gas & Water Valve
Control Point (Terrestrial and GPS)

North Arrow

	EXISTING	PROPOSED
Slope Stake Limits — Top of Cut / Toe of Fill		
Construction Limits	- no symbol -	
Bottom of Ditch		
Fence		
Gate with Fence		
Cattleguard		
Guardrail		
Concrete Barrier and Guard Wall		
Retaining Wall		wall face
Signs (single, double post; portable)		
Delineators		
Pipe Culvert (arrow shows flow)		
Pipe Culvert with End Section		
Pipe Culvert with Headwall		
Pipe Culvert with Drop Inlet	DI	DI
Box Culvert		
Underdrain	UD	UD
Overhead/Above Ground Utilities	P	P
Underground Utilities	W	W

FM = force main, FO = fiber optic, G = gas, IRR = irrigation, O = oil, P = power, SA = sanitary sewer, SD = storm drain, SS = storm sewer, STEAM = steam, T = telephone, TV = CATV, W = water

Poles (Power, Telephone, Joint Use, Light, Support w/Anchor)

Miscellaneous Utility Features — TP

EM = electric meter, TP = telephone pedestal, TV = CATV pedestal, UP = transformer or junction box, WF = water fountain

Building

Right-of-Way Line — R/W

Permanent Easement — P/E

Construction Easement — - no symbol - — TCE

Riprap

Section A-A — A A

NO SCALE

U.S. DEPARTMENT OF TRANSPORTATION, FHWA
OFFICE OF FEDERAL LANDS HIGHWAY

PLAN SYMBOLS AND ABBREVIATIONS

WFLHD DETAIL W101-1
SPECIFICATION FP-14
APPROVED FOR USE 6/2022

c:\pw-work\d0464322\W101-1.dgn [Det W101-1]
10 June 2024 4:49 PM

PROJECT	SHEET NUMBER
MT PRAIRIE 2016(3)	A.4

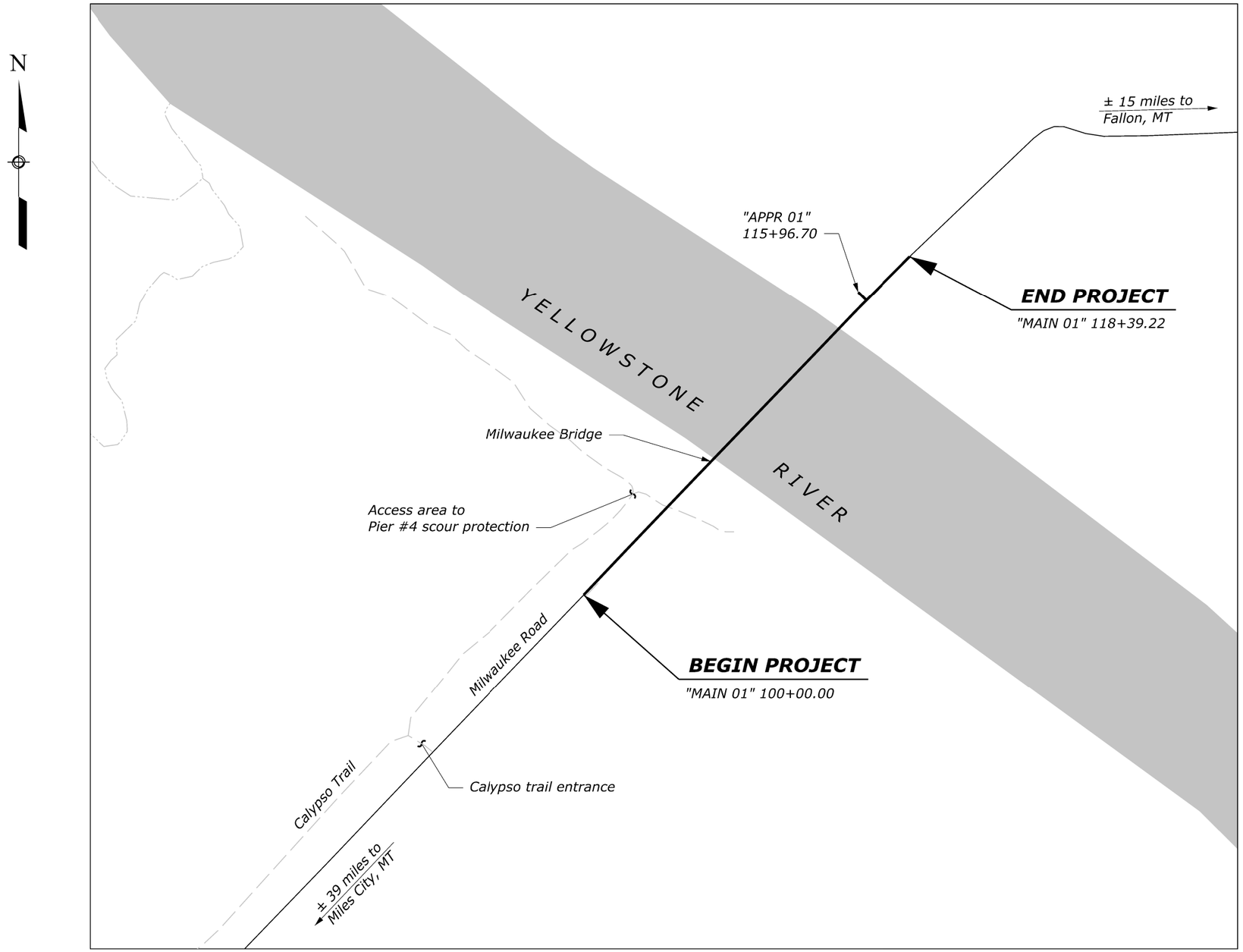

Scale in feet

1000 750 500 0 500 1000

VICINITY MAP

c:\pw_work_wfh\d0592470\mt-a-prai201603_aa.dgn [Vicinity Map]

24 April 2026 12:39 PM

SUMMARY OF QUANTITIES

PROJECT	SHEET NUMBER
MT PRAIRIE 2016(3)	B.1

AMEND	LINE ITEM NO.	PAY ITEM NUMBER	PAY ITEM DESCRIPTION	UNIT	Sheet and Description							ALLOWANCE	Estimated Quantities	Remarks and/or Determination of Estimated Quantity
					SECTION D	SECTION E	SECTION F	SECTION G	SECTION H	SECTION I	SECTION S			
					MAINLINE	APPROACH	SOIL EROSION AND SEDIMENT CONTROL	HYDRAULICS	TEMPORARY TRAFFIC CONTROL	PERMANENT TRAFFIC CONTROL	BRIDGE		BID SCHEDULE	
	A0020	15101-0000	MOBILIZATION	LPSM									ALL	
	A0040	15201-0000	CONSTRUCTION SURVEY AND STAKING	LPSM									ALL	
	A0060	15301-0000	CONTRACTOR QUALITY CONTROL	LPSM									ALL	
	A0080	15401-0000	CONTRACTOR TESTING	LPSM									ALL	
	A0100	15501-0000	CONSTRUCTION SCHEDULE	LPSM									ALL	
	A0120	15703-1500	SOIL EROSION CONTROL, TEMPORARY SOIL TACKIFIER	ACRE			0.7					0.1	0.8	
	A0140	15705-1400	SOIL EROSION CONTROL, FIBER ROLL	LNFT			1546					54	1600	
	A0160	15802-0000	WATERING FOR DUST CONTROL	LPSM									ALL	
	A0180	20101-0000	CLEARING AND GRUBBING	ACRE	0.1	0.1						0.1	0.3	
	A0200	20301-2300	REMOVAL OF SIGN/MARKER	EACH						4			4	
	A0220	20301-2400	REMOVAL OF SIGN	EACH						2			2	
	A0240	20302-0150	REMOVAL OF BRIDGE RAILING	LNFT							2160		2160	Contract Quantity,
	A0260	20303-0200	REMOVAL OF BRIDGE DECK	SQYD							1520		1520	Contract Quantity,
	A0280	20401-0000	ROADWAY EXCAVATION	CUYD	192	5						53	250	
	A0300	20402-0000	SUBEXCAVATION	CUYD				1449				151	1600	
	A0320	20403-0000	UNCLASSIFIED BORROW	CUYD	285	8						207	500	
	A0340	20815-0000	COFFERDAMS	LPSM									ALL	
	A0360	25101-0500	PLACED RIPRAP, METHOD A, CLASS 5	CUYD				1449				151	1600	
	A0380	30201-2000	ROADWAY AGGREGATE, METHOD 2	CUYD	405	27						68	500	
	A0400	55222-0000	REPAIR CONCRETE,(BENT IMPROVEMENT)	LPSM									ALL	
	A0420	55502-0000	STRUCTURAL STEEL, FURNISHED, FABRICATED, AND ERECTED,(FLOORBEAMS, OPEN GRATE STEEL DECK, MISCELLANEOUS STEEL)	LB							382000		382000	Contract Quantity,
	A0440	55601-0900	BRIDGE RAILING, STEEL	LNFT							2170		2170	Contract Quantity,
	A0460	56202-0000	TEMPORARY SUPPORT STRUCTURE,(WORK PLATFORM)	LPSM									ALL	
	A0480	56320-0000	CONTAINMENT SYSTEM AND WORKER PROTECTION PLAN	LPSM									ALL	
	A0500	61921-1000	REMOVE AND RESET FENCE	LNFT	14							1	15	
	A0520	62201-0250	DUMP TRUCK, 10 CUBIC YARD MINIMUM CAPACITY	HOUR									40	
	A0540	62201-0600	BACKHOE LOADER, 8 CUBIC FOOT MINIMUM RATED CAPACITY BUCKET, 30-INCH WIDTH	HOUR									20	
	A0560	62201-0850	WHEEL LOADER, 1 CUBIC YARD MINIMUM RATED CAPACITY	HOUR									20	
	A0580	62201-2800	MOTOR GRADER, 8 FOOT MINIMUM BLADE	HOUR									20	
	A0600	62201-3400	HYDRAULIC EXCAVATOR, 1 CUBIC YARD MINIMUM CAPACITY WITH THUMB ATTACHMENT	HOUR									40	
	A0620	62201-3750	CHAIN SAW	HOUR									10	
	A0640	62301-0000	GENERAL LABOR	HOUR									80	
	A0660	62402-0300	FURNISHING AND PLACING TOPSOIL, 4-INCH DEPTH	ACRE	0.2	0.1							0.3	
	A0680	62501-0000	TURF ESTABLISHMENT	ACRE	0.2	0.1						0.1	0.4	

Milestone: SIGN-OFF; Date Completed: 6/1/2026

c:\pw_work_wfl\d0592471\[mt-a-prai20163_ba.xlsm]Sheet
5-Jun-2026 11:38 AM

SUMMARY OF QUANTITIES

PROJECT	SHEET NUMBER
MT PRAIRIE 2016(3)	B.2

AMEND	LINE ITEM NO.	PAY ITEM NUMBER	PAY ITEM DESCRIPTION	UNIT	Sheet and Description							ALLOWANCE	Estimated Quantities	Remarks and/or Determination of Estimated Quantity
					SECTION D	SECTION E	SECTION F	SECTION G	SECTION H	SECTION I	SECTION S			
					MAINLINE	APPROACH	SOIL EROSION AND SEDIMENT CONTROL	HYDRAULICS	TEMPORARY TRAFFIC CONTROL	PERMANENT TRAFFIC CONTROL	BRIDGE		BID SCHEDULE	
	A0700	63302-0000	SIGN SYSTEM	SQFT						42.55		7.45	50	
	A0720	63308-0000	OBJECT MARKER	EACH						4			4	
	A0740	63309-0000	DELINEATOR	EACH						2			2	
	A0760	63501-0000	TEMPORARY TRAFFIC CONTROL,(RIVER TRAFFIC)	LPSM									ALL	
	A0780	63502-0600	TEMPORARY TRAFFIC CONTROL, BARRICADE TYPE 3	EACH					6			1	7	
	A0800	63502-1300	TEMPORARY TRAFFIC CONTROL, DRUM	EACH					20			2	22	
	A0820	63504-1000	TEMPORARY TRAFFIC CONTROL, CONSTRUCTION SIGN	SQFT					154.5			25.5	180	

Milestone: SIGN-OFF; Date Completed: 6/1/2026

5-Jun-2026 11:38 AM c:\pw_work_wf\d0592471\{mt-a-prai20163_ba.xlsm}Sheet (2)

PROJECT	SHEET NUMBER
MT PRAIRIE 2016(3)	C.1

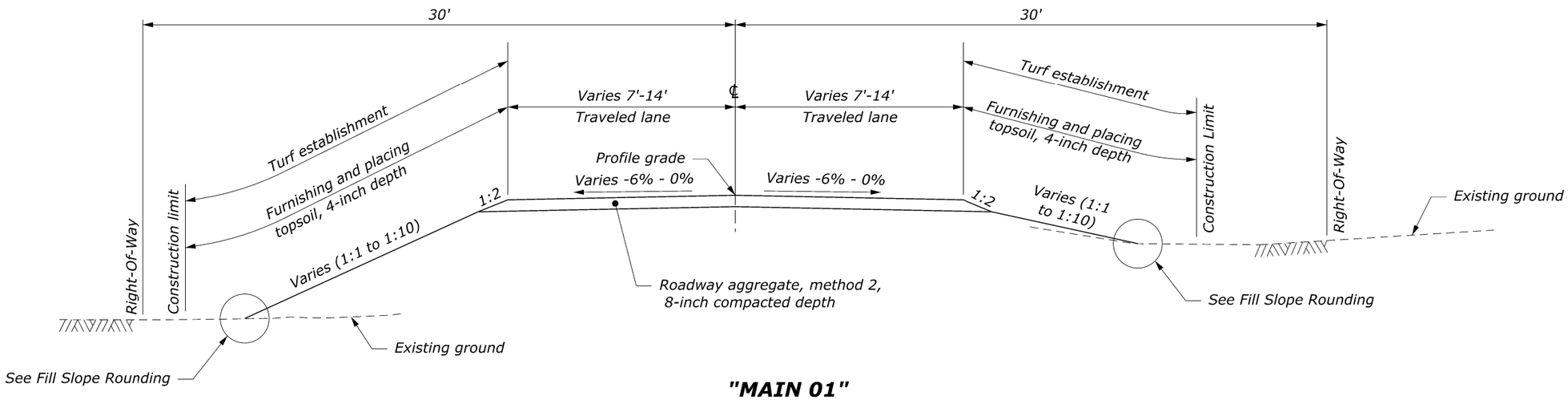

"MAIN 01"

100+14.22 to 103+91.40
114+77.00 to 118+34.22

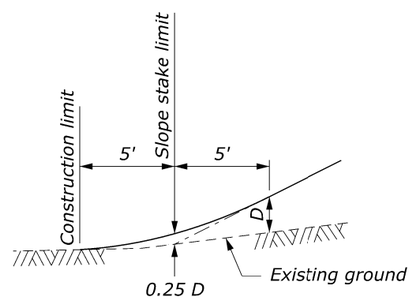

FILL SLOPE ROUNDING

c:\pw_work_wfl\d0592472\mt-a-prai201603_ca.dgn [Typical Section]

24 April 2026 1:08 PM

TYPICAL SECTION

PROJECT	SHEET NUMBER
MT PRAIRIE 2016(3)	D.1

PROJECT :Milwaukee Bridge Resurfacing and Rehabilitation
DATE OF FIELD WORK :June 2023
DATE OF FINAL ADJUSTMENT : 6/14/2023

PROJECT UNITS : International Foot

COORDINATE SYSTEM :Montana SPCS NAD83 2011
VERTICAL DATUM : Orthometric elevations based on the NAVD88 GEOID18
EPOCH DATE : 2010.0000
CADD COORDINATE SYSTEM : MT83/2011IF NSRS11(NAD83/2011) Montana, Intl Foot

POINT NUMBER	STATE PLANE COORDINATES			GEO COORDINATES				DESCRIPTION
	NORTH	EAST	ELEVATION	LATITUDE	LONGITUDE	ELLIPSOID HEIGHT	COMBINED FACTOR	
23101	950002.376	2992866.273	2228.449	46°46'56.621070"N	105°24'25.375112"W	2175.1325	0.999296818	5/8" ir w/fhwa alum cap
23102	949613.926	2992471.541	2227.801	46°46'52.993366"N	105°24'31.334288"W	2174.4886	0.999296919	5/8" ir w/fhwa alum cap
23103	949203.205	2992007.539	2227.297	46°46'49.181615"N	105°24'38.304495"W	2173.9896	0.999297017	5/8" ir w/fhwa alum cap
23104	948640.979	2991309.905	2191.675	46°46'43.995779"N	105°24'48.742322"W	2138.3743	0.999298819	5/8" ir w/fhwa alum cap
23105	948364.341	2991273.326	2226.697	46°46'41.286119"N	105°24'49.474879"W	2173.3981	0.9992972	5/8" ir w/fhwa alum cap
23106	947983.270	2990904.130	2228.385	46°46'37.717699"N	105°24'55.060985"W	2175.0897	0.99929719	5/8" ir w/fhwa alum cap

NOTE:

1. *To precisely check distances between points as measured on the ground, inverse the state plane coordinates and divide the computed distance by a mean combined factor of the two points.*

SURVEY CONTROL

--/---- WFLHD_Survey
--/---- Checked by:
--/---- WFLHD_Survey
Designed by:
24-Apr-2026 1:16 PM
c:\pw_work_wfl\d0592473\[Milwaukee_Bridge_controlsheet.xlsx]Sheet

PROJECT	SHEET NUMBER
MT PRAIRIE 2016(3)	D.2

"MAIN 01" QUANTITIES

ITEM	DESCRIPTION	UNIT	QUANTITIES	NOTES
20101-0000	CLEARING AND GRUBBING	ACRE	0.1	
30201-2000	ROADWAY AGGREGATE, METHOD 2	CUYD	405	
61921-1000	REMOVE AND RESET FENCE	LNFT	14	Remove and reset portions of fence within construction limit.
62402-0300	FURNISHING AND PLACING TOPSOIL, 4-INCH DEPTH	ACRE	0.2	
62501-0000	TURF ESTABLISHMENT	ACRE	0.2	

TABULATION OF MAINLINE QUANTITIES

c:\pw_work_wfl\d0592473\mt-a-prai201603_fa.dgn [TABULATION OF MAINLINE QUANTITIES]
24 April 2026 1:14 PM

PROJECT	SHEET NUMBER
MT PRAIRIE 2016(3)	D.3

EARTHWORK SUMMARY TABLE

LOCATION	CUT						FILL				TOTALS		
	Item 20401-0000 ROADWAY EXCAVATION	(+) Additional Excavation (See Note 2) for info only	(-) Topsoil Stripped from Cuts for info only	(-) Estimate of Unsuitable Material for info only	Total Unadjusted Excavation Available for Fill for info only	Total Adjusted Available for Fill (adjusted based on shrink/swell factor) for info only	Embankment for info only	(+) Additional Backfill Needed (See Note 3) for info only	(+) Topsoil stripped from embankment foundation areas for info only	Total Fill Needed for info only	Total Adjusted Available For Fill less Total Fill Needed for info only	Waste for info only	Item 20403-0000 UNCLASSIFIED BORROW
UNITS	CUYD	CUYD	CUYD	CUYD	CUYD	CUYD	CUYD	CUYD	CUYD	CUYD	CUYD	CUYD	CUYD
"MAIN 01"	192		42	-	150	128	396		17	412	-285		285
"APPR 01"	5		2	-	3	3	11		0	11	-8		8
TOTALS	**197**	0	44	0	153	130	407	0	17	423	-293	0	**293**

NOTE:

1. All volumes are in-place cubic yards (i.e. in situ or compacted in place).
2. Additional excavation that is suitable for use in embankment construction (Structural Excavation).
3. Additional material needed for embankment construction (Structural backfill).

EARTHWORK SUMMARY

c:\pw_work\wfl\d0592473\mt-a-prai201603_faa.dgn [EARTHWORK SUMMARY]
24 April 2026 1:21 PM

PROJECT	SHEET NUMBER
MT PRAIRIE 2016(3)	D.4

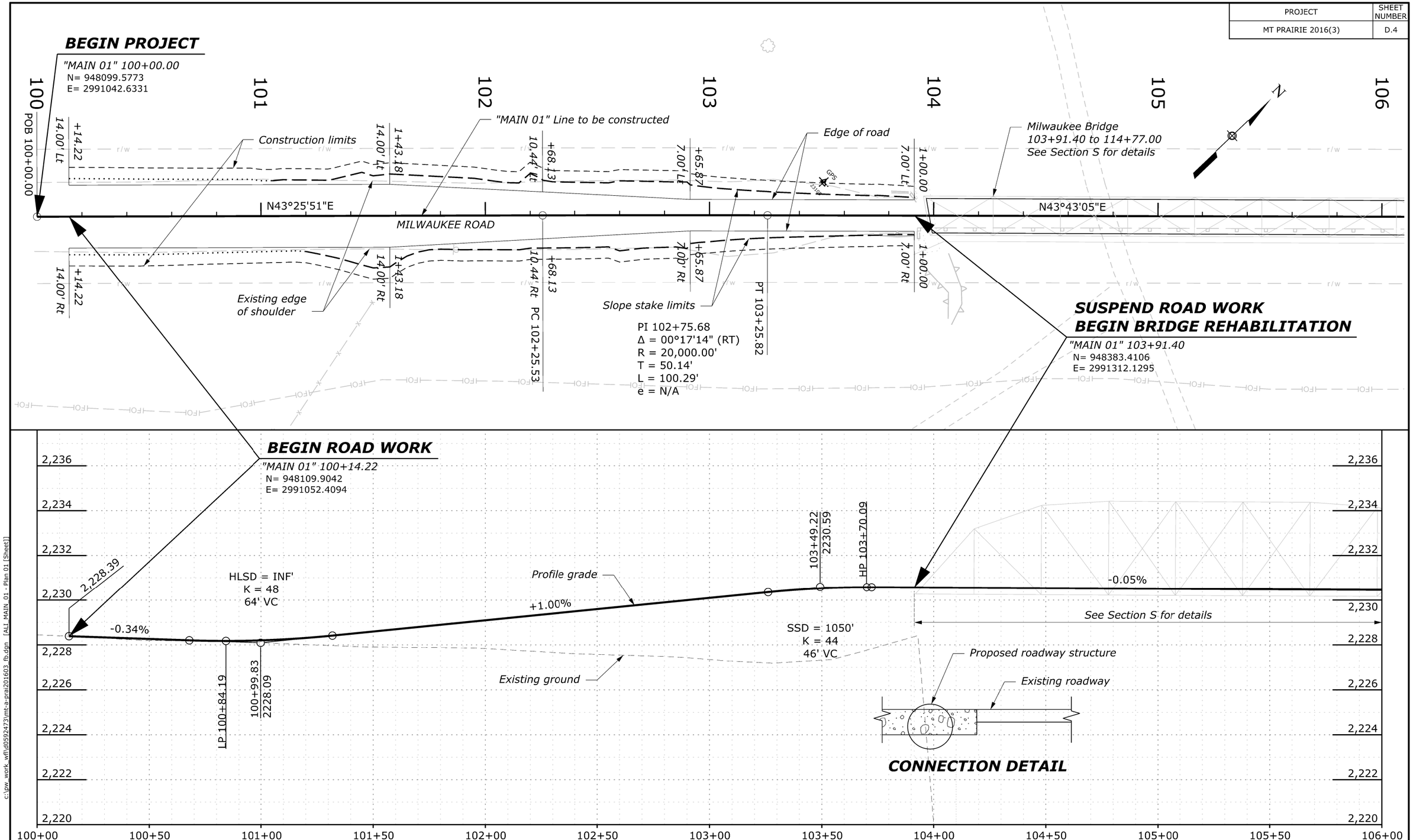

c:\pw_work\wfl\d0592473\mt-a-prai201603_fb.dgn [ALI_MAIN_01 - Plan 01 (Sheet)]

24 April 2026 1:30 PM

PROJECT	SHEET NUMBER
MT PRAIRIE 2016(3)	D.5

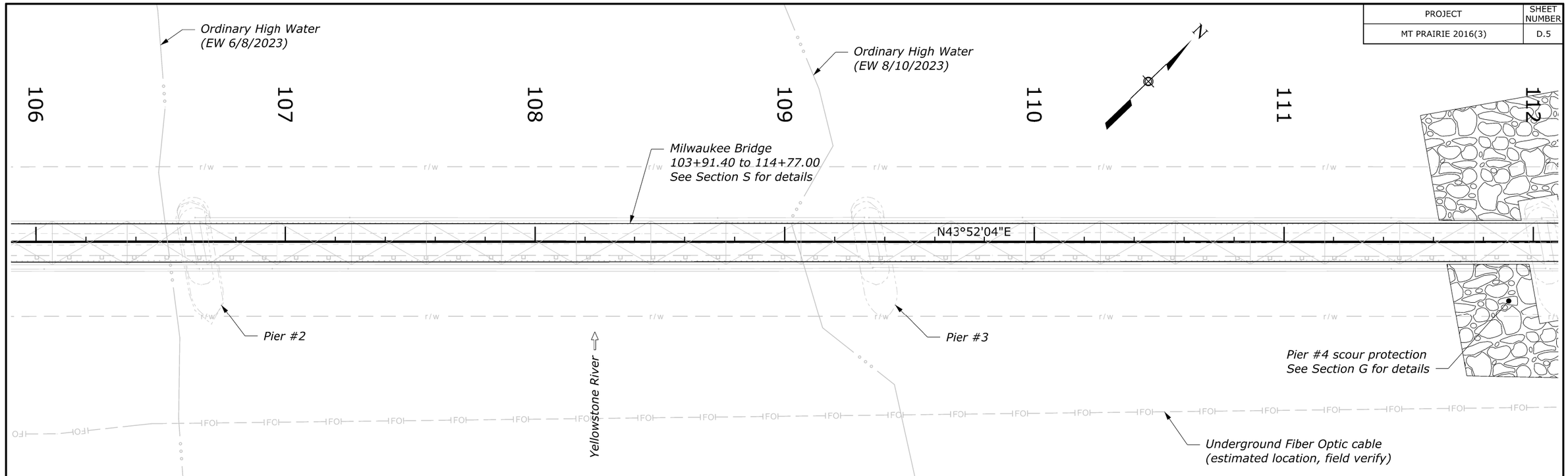

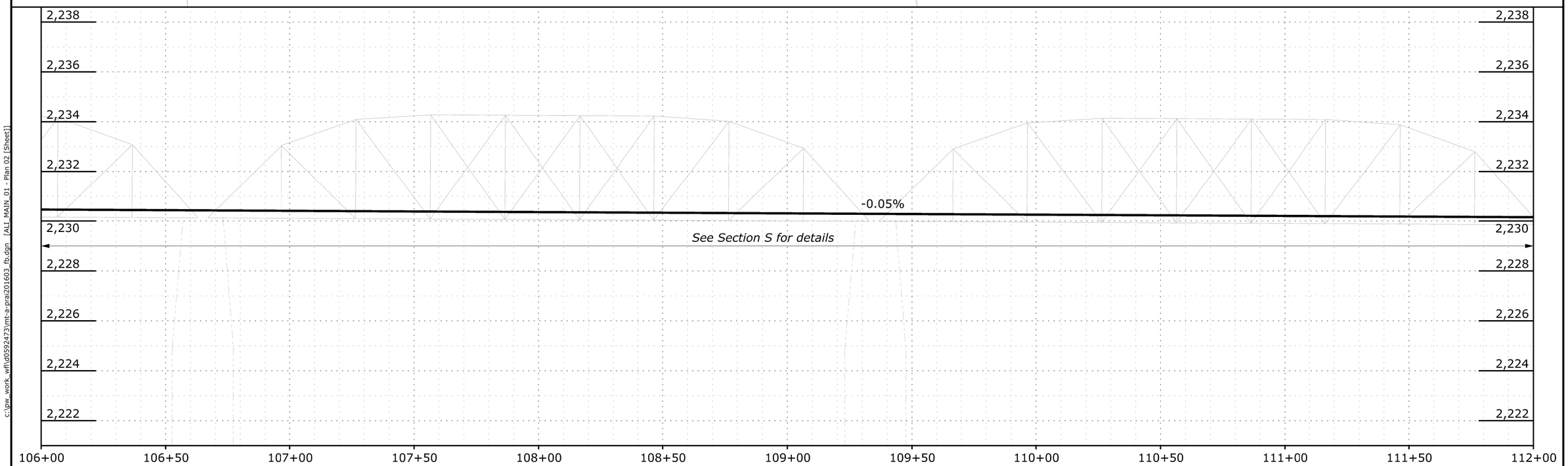

c:\pw_work_wfl\d0592473\mt-a-prai201603_fb.dgn [ALI_MAIN_01 - Plan 02 (Sheet)]

24 April 2026 1:34 PM

PROJECT	SHEET NUMBER
MT PRAIRIE 2016(3)	D.6

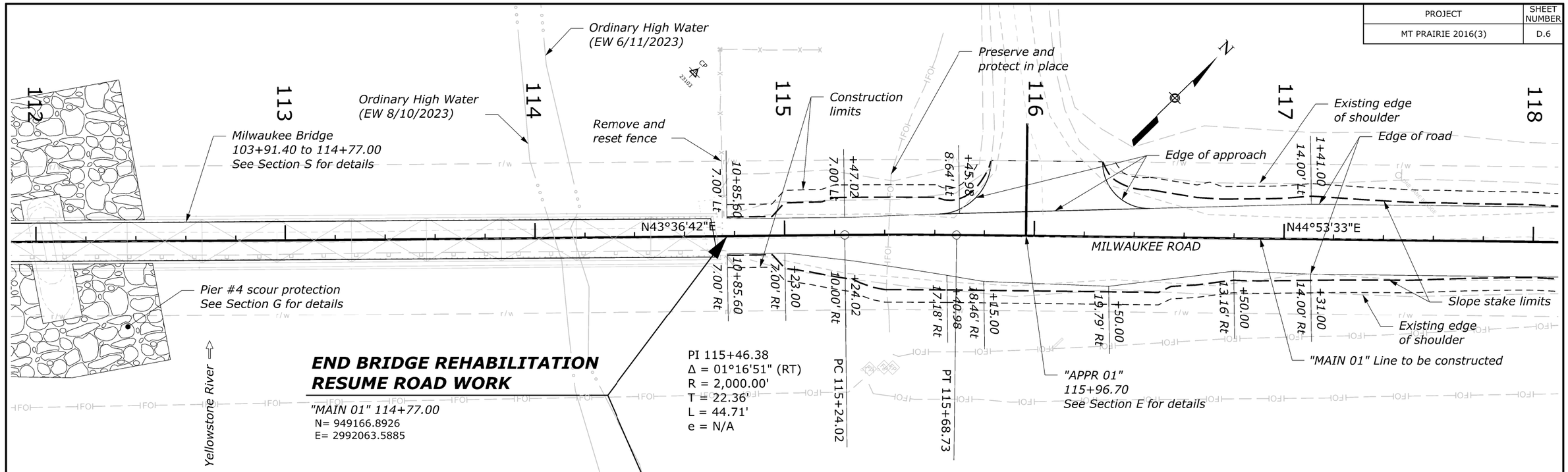

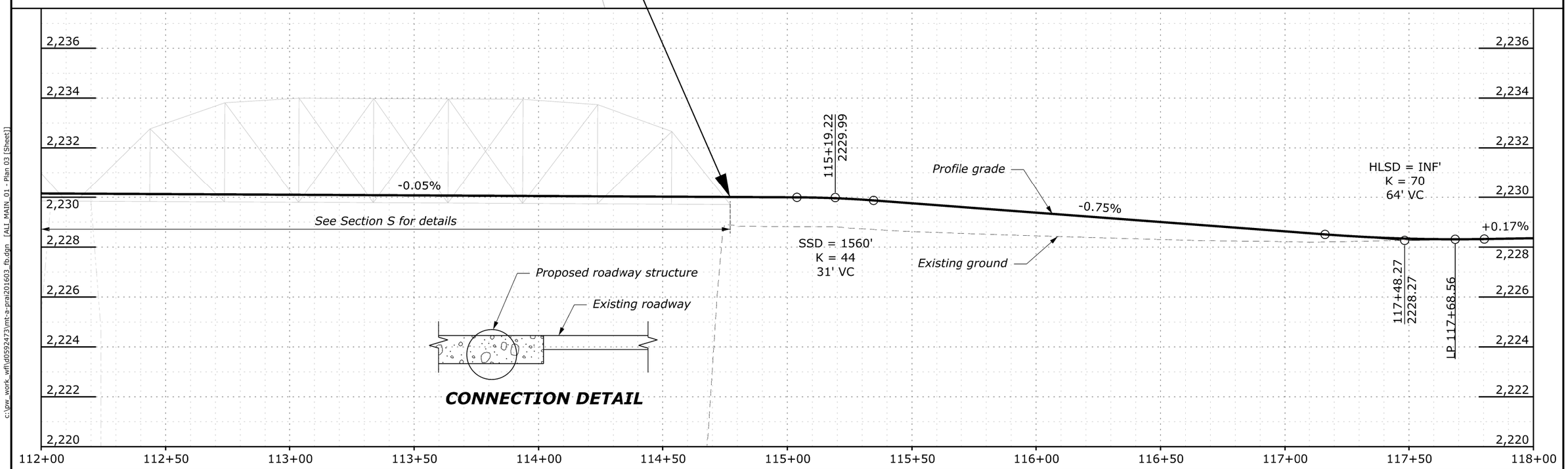

c:\pw_work_wfl\d0592473\mt-a-prai201603_fb.dgn [ALI_MAIN_01 - Plan 03 (Sheet)]

24 April 2026 1:37 PM

PROJECT	SHEET NUMBER
MT PRAIRIE 2016(3)	D.7

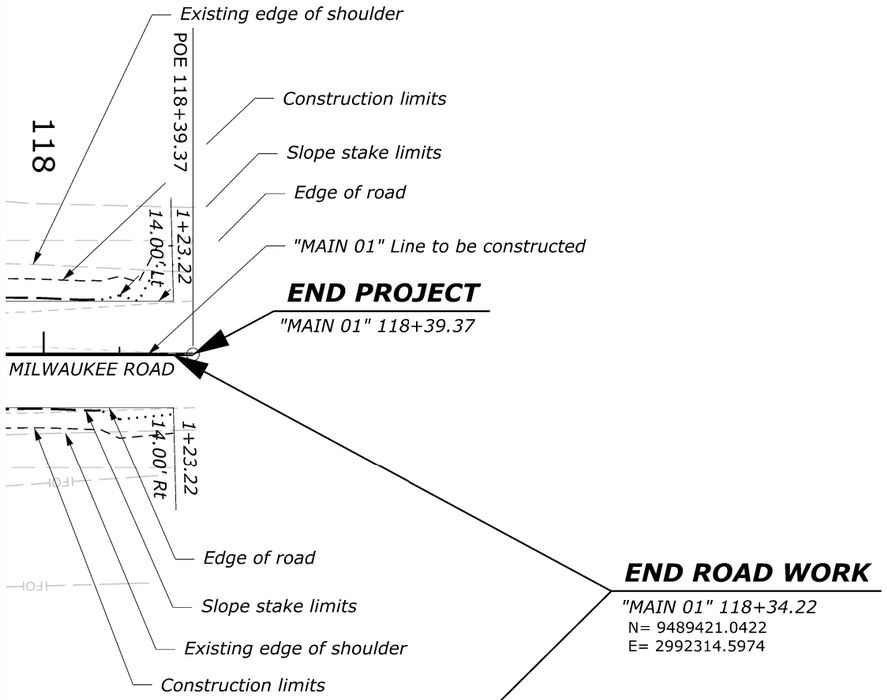

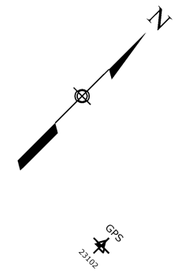

UTILITY OWNER CONTACTS:

Mid-Rivers Communications
Communication (Fiber Optic)
Eric Schultz
Phone: (406) 687-7335
Email: eric.schultz@midrivers.coop

Rocky Burman
Phone: (406) 234-7429
Email: rocky.burman@midrivers.coop

c:\pw_work_wfl\d0592473\mt-a-prai201603_fb.dgn [ALL_MAIN_01 - Plan 04 (Sheet)]
24 April 2026 1:42 PM

"APPR 01" QUANTITIES			
ITEM	DESCRIPTION	UNIT	QUANTITIES
20101-0000	CLEARING AND GRUBBING	ACRE	0.1
30201-2000	ROADWAY AGGREGATE, METHOD 2	CUYD	27
62402-0300	FURNISHING AND PLACING CONSERVED TOPSOIL, 4-INCH DEPTH	ACRE	0.1
62501-0000	TURF ESTABLISHMENT	ACRE	0.1

NOTE:

1. *See Sheet D.3 for Approach roadway excavation and unclassified borrow quantities.*

TABULATION OF APPROACH QUANTITIES

c:\pw_work\wfl\d0592332\mt-a-prai201603_qa.dgn [TABULATION OF APPROACH QUANTITIES]

24 April 2026 1:45 PM

PROJECT	SHEET NUMBER
MT PRAIRIE 2016(3)	E.2

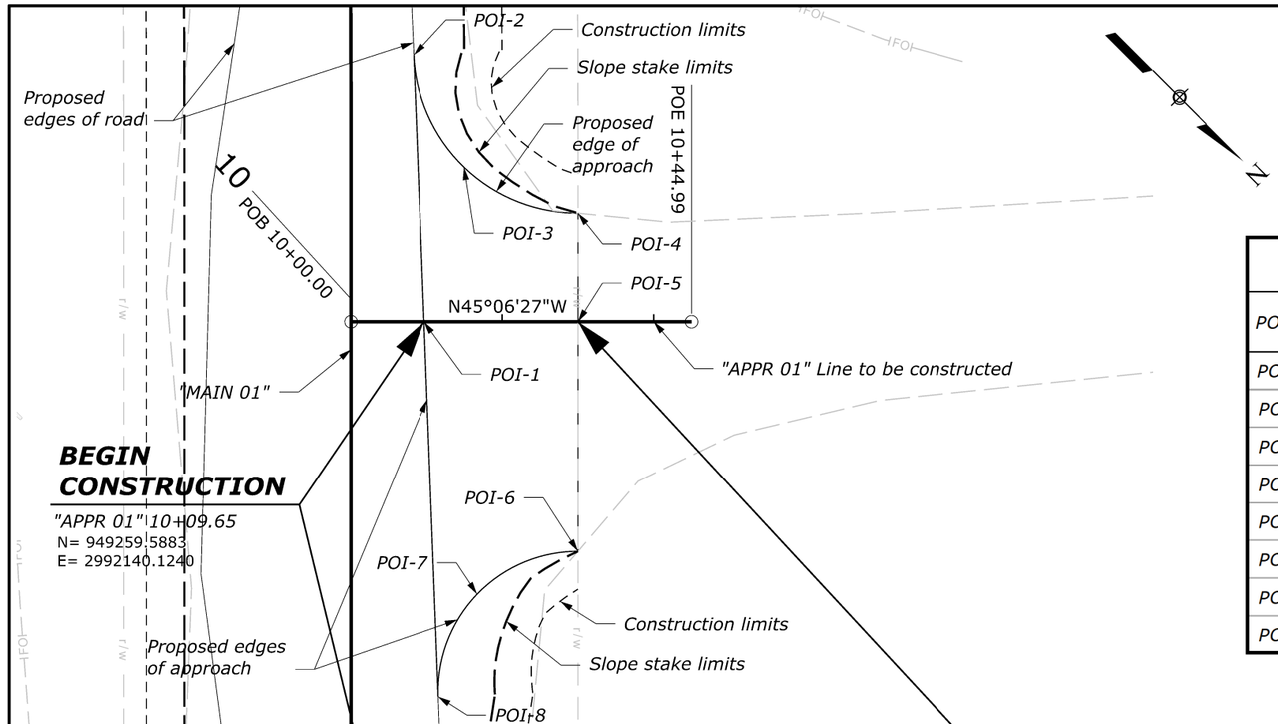

LAYOUT POINT TABLE

POINT	NORTHING	EASTING	STATION	OFFSET (LNFT)	SIDE (LT/RT)	ELEVATION	ALIGNMENT	NOTES
POI-1	949259.59	2992140.12	10+09.65	0.00	-	2229.12	"APPR 01"	Approach Centerline
POI-2	949233.76	2992116.30	10+08.30	35.11	LT	2229.42	"APPR 01"	Front Edge of Pavement
POI-3	949248.93	2992122.01	10+14.96	20.34	LT	2228.38	"APPR 01"	Radius Point
POI-4	949263.83	2992115.63	10+30.00	14.29	LT	2227.34	"APPR 01"	Back Corner Edge
POI-5	949273.95	2992125.71	10+30.00	0.00	-	2227.36	"APPR 01"	Approach Centerline
POI-6	949295.43	2992147.11	10+30.00	30.32	RT	2227.51	"APPR 01"	Back Corner Edge
POI-7	949290.05	2992160.54	10+16.69	35.98	RT	2228.10	"APPR 01"	Radius Point
POI-8	949295.99	2992173.73	10+11.53	49.50	RT	2228.69	"APPR 01"	Front Edge of Pavement

END CONSTRUCTION

"APPR 01" 10+30.00
N= 949273.9497
E= 2992125.7086

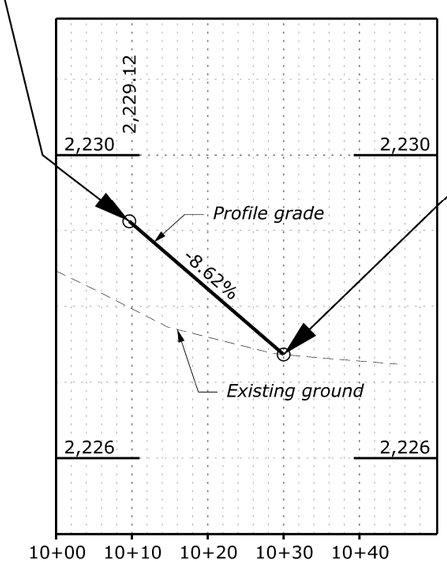

c:\pw_work\wfl\d0592532\mt-a-prai201603_gb.dgn [ALL_APPR_01 Plan-Profile - APPR 01 Plan 01 [Sheet]]
24 April 2026 1:48 PM

PROJECT	SHEET NUMBER
MT PRAIRIE 2016(3)	F.1

ITEM 15703-1500 SOIL EROSION CONTROL, TEMPORARY SOIL TACKIFIER	
LOCATIONS	QUANTITY (ACRE)
"MAIN 01" 100+14.22 to 103+91.40	0.3
"MAIN 01" 114+77.00 to 118+34.22	0.4
TOTAL	0.7

ITEM 15705-1400 SOIL EROSION CONTROL, FIBER ROLL					
LOCATIONS				SIDE (LT/RT)	QUANTITY (LNFT)
"MAIN 01"	100+14	to	103+91	LT	377
"MAIN 01"	100+14	to	103+91	RT	377
"MAIN 01"	104+17			LT/RT	65
"MAIN 01"	114+43			LT/RT	65
"MAIN 01"	114+77	to	115+82	LT	105
"MAIN 01"	116+27	to	118+27	LT	200
"MAIN 01"	114+77	to	118+34	RT	357
				TOTAL	1546

TABULATION OF SOIL EROSION AND SEDIMENT QUANTITIES

24 April 2026 1:57 PM c:\pw_work\wfl\d0592533\mt-a-prai201603_ea.dgn [TABULATION OF SOIL EROSION AND SEDIMENT QUANTITIES]

PROJECT	SHEET NUMBER
MT PRAIRIE 2016(3)	F.2

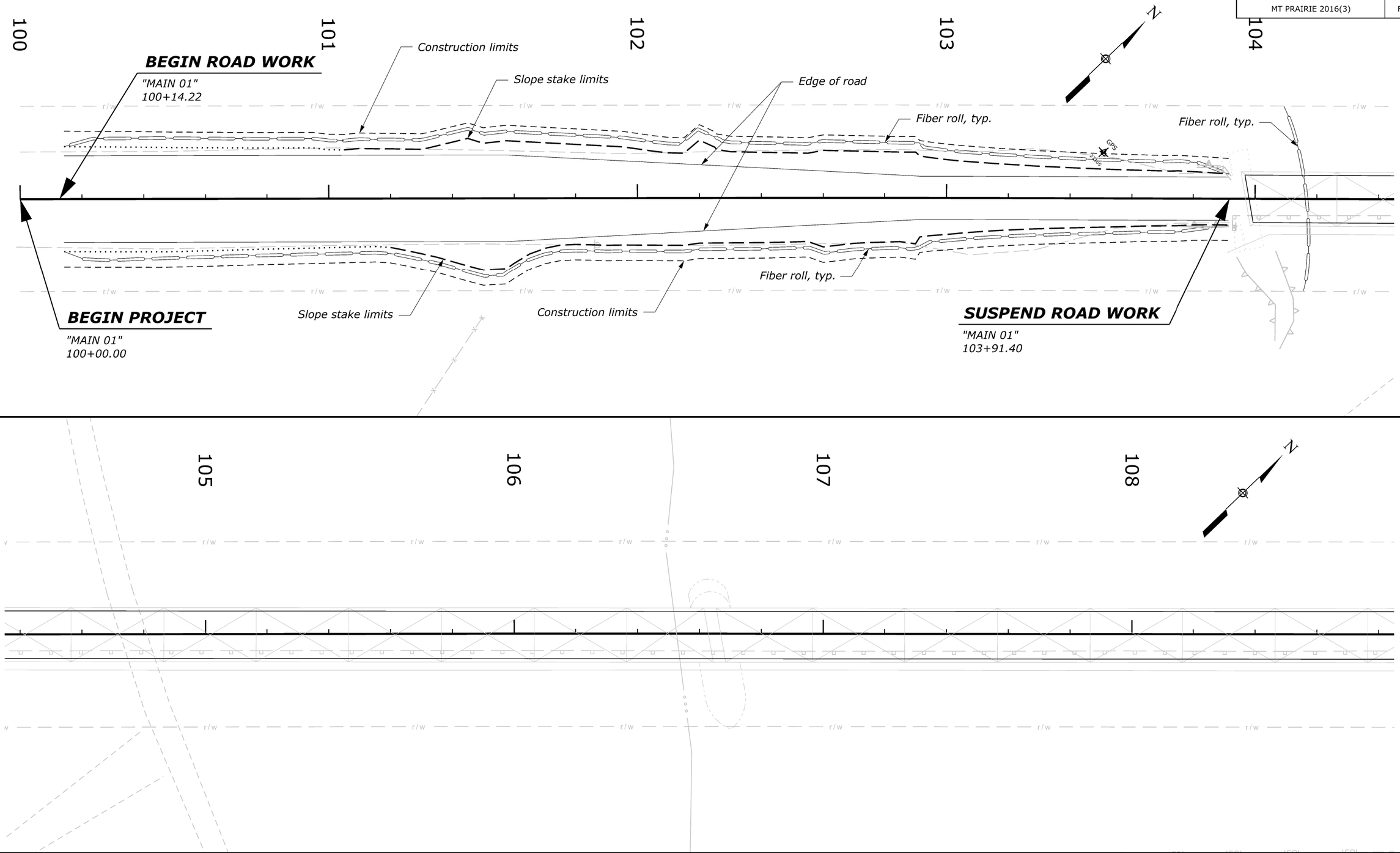

SOIL EROSION AND SEDIMENT CONTROL PLAN (1 OF 3)

c:\pw_work\wfh\d0592533\mt-a-prai201603_eb.dgn [Soil Erosion and Sediment Control Plan (1 of 3)]

24 April 2026 1:53 PM

PROJECT	SHEET NUMBER
MT PRAIRIE 2016(3)	F.3

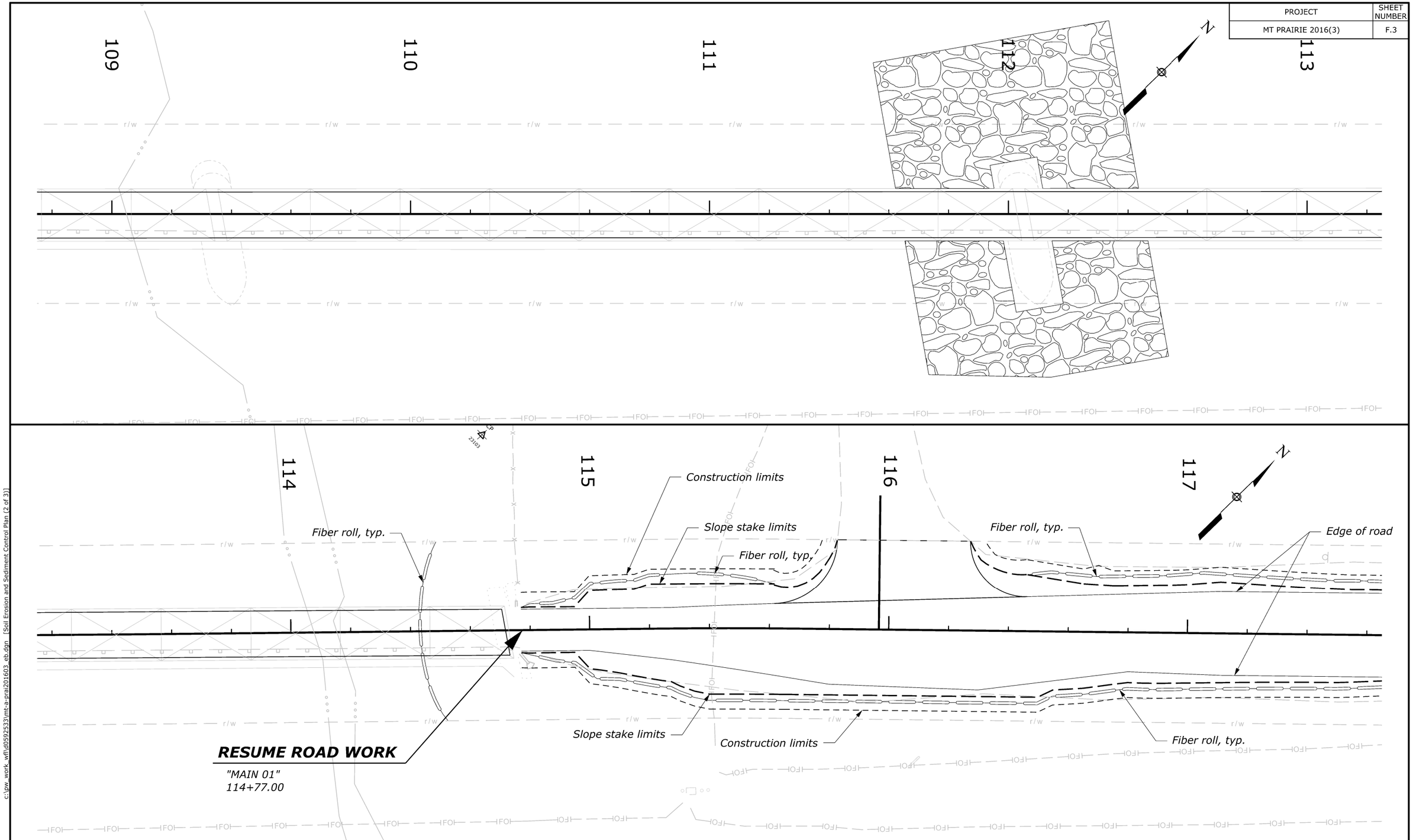

SOIL EROSION AND SEDIMENT CONTROL PLAN (2 OF 3)

c:\pw_work_wfl\d0592533\mt-a-prai201603_eb.dgn [Soil Erosion and Sediment Control Plan (2 of 3)]
24 April 2026 1:54 PM

PROJECT	SHEET NUMBER
MT PRAIRIE 2016(3)	F.4

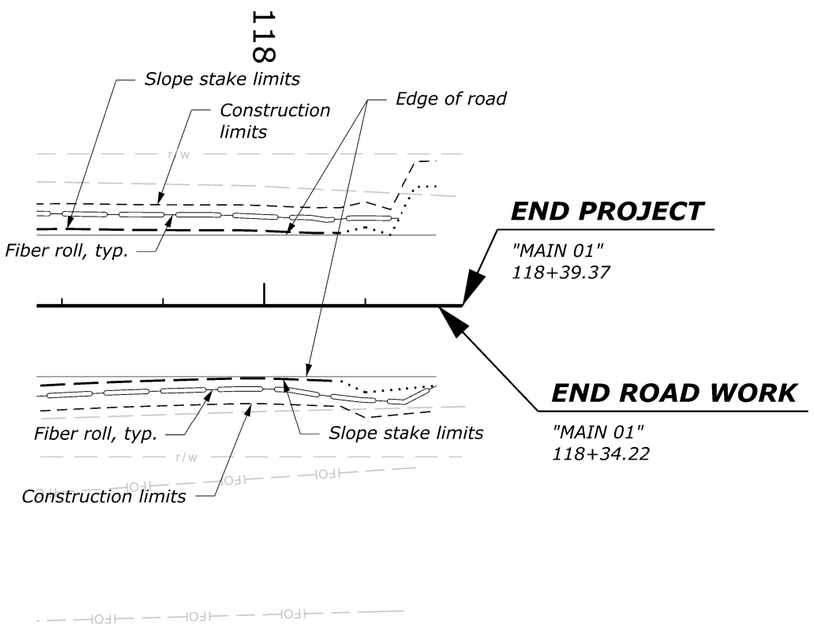

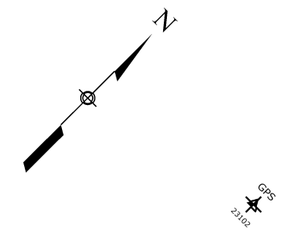

SOIL EROSION AND SEDIMENT CONTROL PLAN (3 OF 3)

c:\pw_work_wfh\d0592533\mt-a-prai201603_eb.dgn [Soil Erosion and Sediment Control Plan (3 of 3)]
24 April 2026 1:54 PM

PROJECT	SHEET NUMBER
MT PRAIRIE 2016(3)	F.5

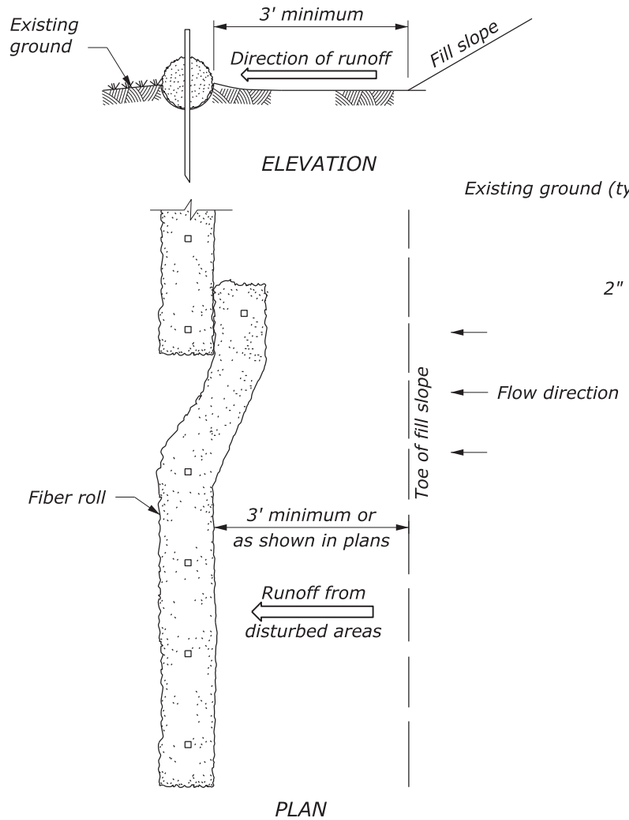

INSTALLATION BEYOND TOE OF SLOPE

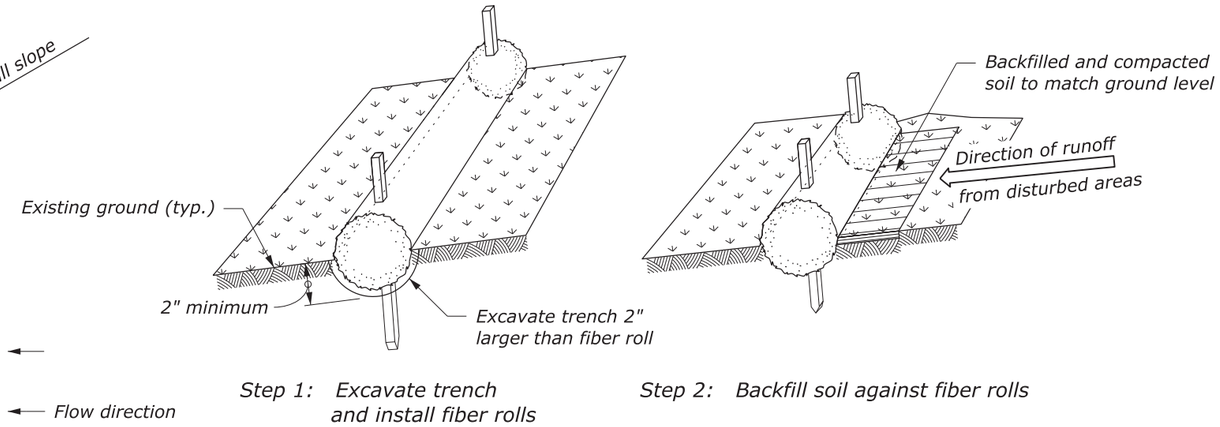

PROPERLY STAKED AND ENTRENCHED FIBER ROLL

FIBER ROLL SPACING	
Slope	Spacing (FT)
1:4 or flatter	40
1:3	30
1:2	20
1:1	10

STAKES REQUIRED	
Fiber roll length (FT)	Stakes required for each roll
25	8
20	6
12	4

NOTE:

1. Drive stakes at each end and at 4-foot spacing until fiber roll is secure to slope. Live stakes may be used for permanent installations. Do not crush fiber roll while staking.
2. Overlap fiber rolls 12-inch minimum. Drive stakes at 6-inches from fiber roll end angles towards the adjacent fiber roll and space stakes at 4-foot maximum.

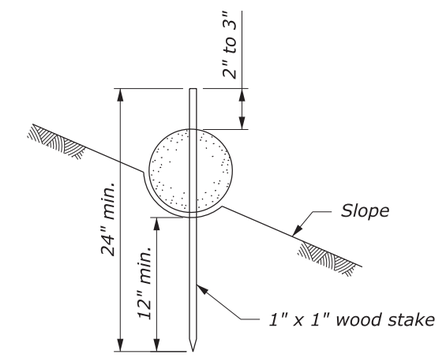

FIBER ROLL STAKING DETAIL

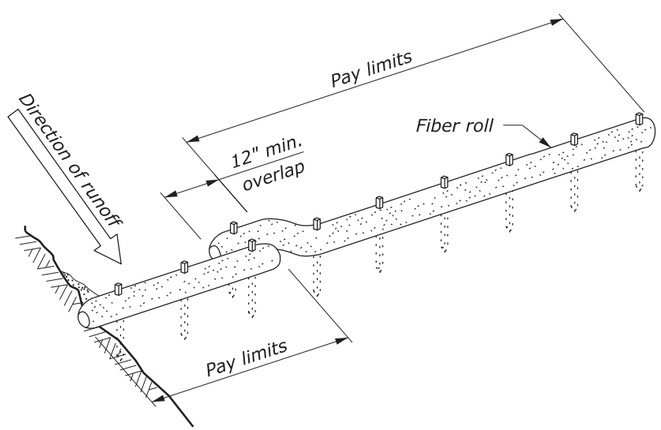

ALTERNATE FIBER ROLL JOINT DETAIL SLOPE PROTECTION INSTALLATION

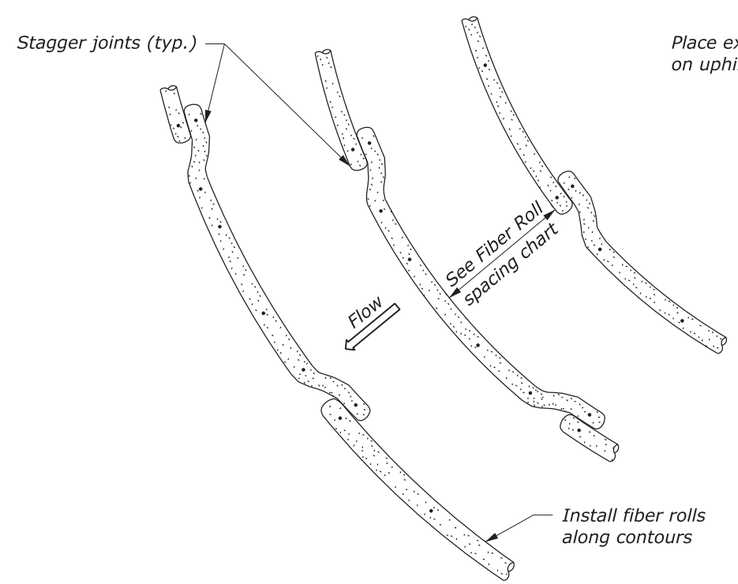

INSTALLATION ALONG SLOPES

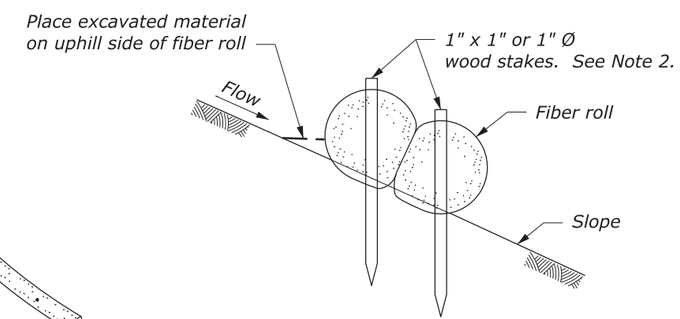

FIBER ROLL LAPPING DETAIL

NO SCALE

U.S. DEPARTMENT OF TRANSPORTATION, FHWA OFFICE OF FEDERAL LANDS HIGHWAY	WFL STANDARD W157-21
FIBER ROLL	SPECIFICATION FP-24, FP-14
	APPROVED FOR USE 7/2016

c:\pw-work\d0422331\W157-21.dgn [Std W157-21]
28 March 2025 11:17 AM

PROJECT	SHEET NUMBER
MT PRAIRIE 2016(3)	G.1

HYDRAULIC QUANTITIES			
ITEM NUMBER	DESCRIPTION	UNIT	QUANTITY
20402-0000	SUBEXCAVATION	CUYD	1449
20815-0000	COFFERDAMS	LPSM	ALL
25101-0500	PLACED RIPRAP, METHOD A, CLASS 5	CUYD	1449

INFORMATIONAL QUANTITIES ONLY		
DESCRIPTION	UNIT	QUANTITY
GEOTEXTILE FILTER, CLASS 1, NON-WOVEN	SQYD	590

TABULATION OF HYDRAULICS QUANTITIES

22 April 2026 2:50 PM c:\pw_work_wfl\d0592534\mt-a-prai201603_ga-c.dgn [Tabulation of Hydraulics Quantities]

PROJECT	SHEET NUMBER
MT PRAIRIE 2016(3)	G.2

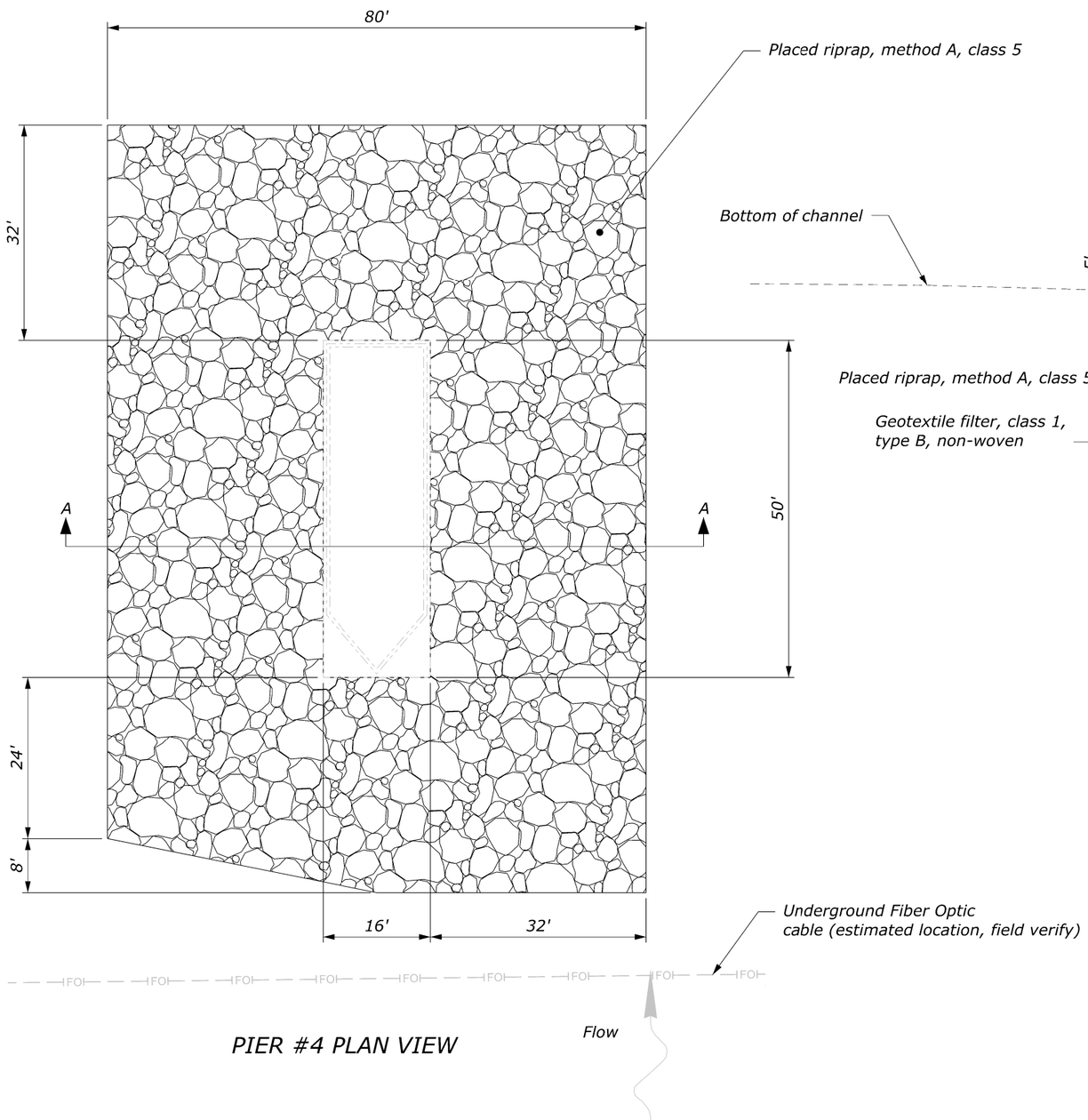

PIER #4 PLAN VIEW

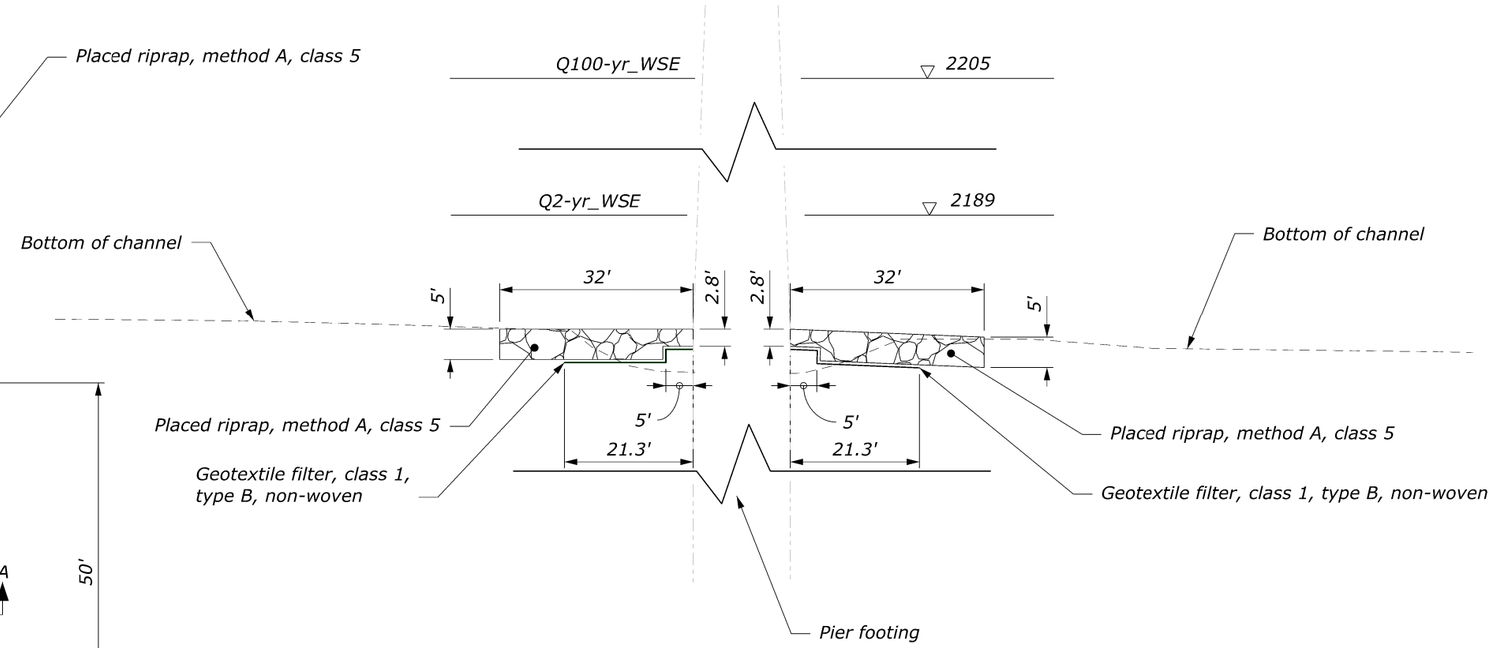

SECTION A-A

NOTE:

1. Pier dimensions shown are approximate. Field-verify actual dimensions.
2. Set the top of the riprap at the channel bed.
3. Place the riprap toe 34" below the channel bottom around the pier for an extent of 5'.
4. Extend the riprap to a depth of 5' for the remaining extent.

PIER #4 SCOUR COUNTERMEASURE DETAILS

c:\pw_work, wfl\d0592534\mt-a-prai201603_ga-c.dgn [Pier #4 Scour Countermeasure Details]
29 May 2026 2:06 PM

PROJECT	SHEET NUMBER
MT PRAIRIE 2016(3)	G.3

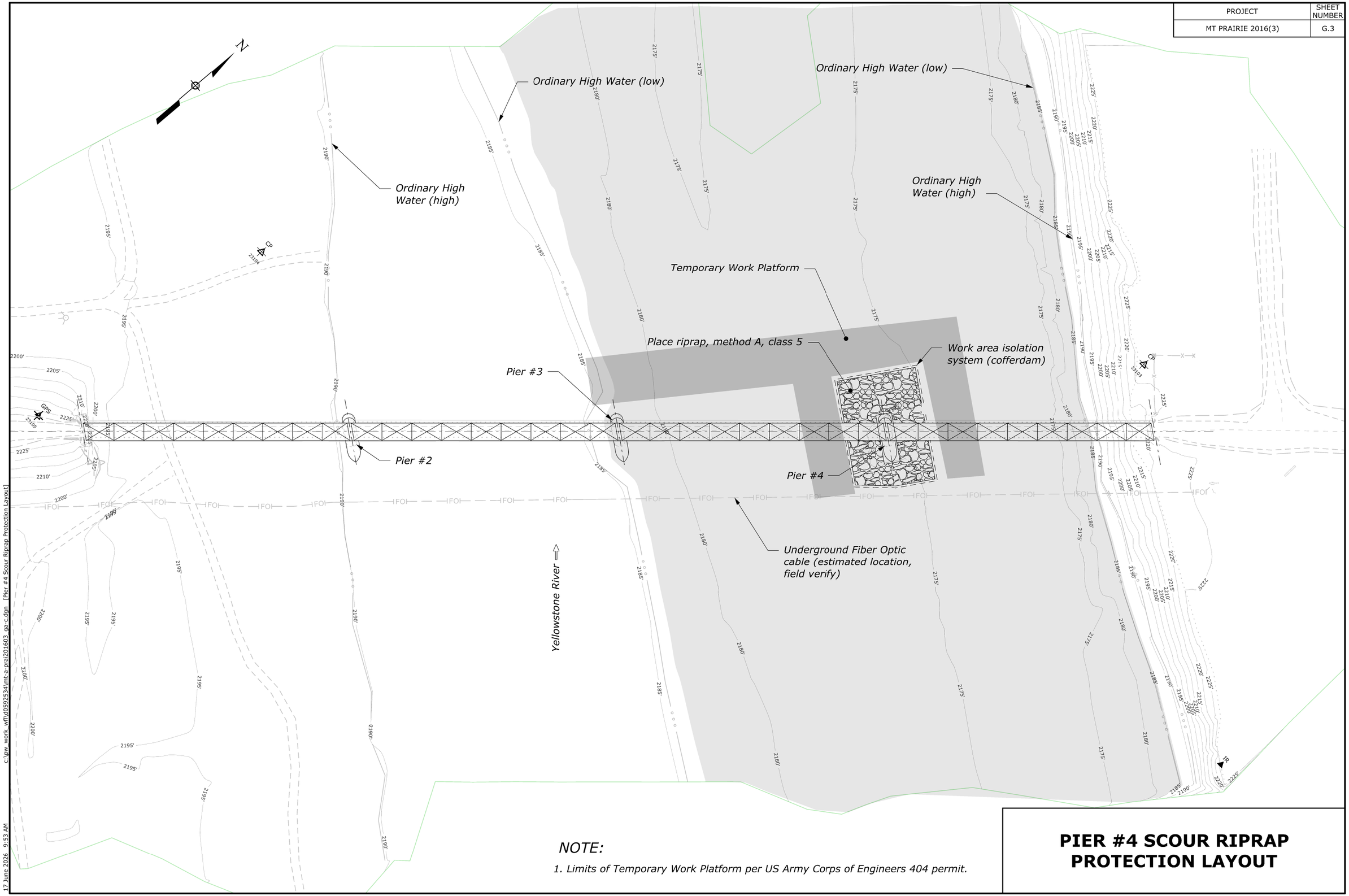

NOTE:

1. Limits of Temporary Work Platform per US Army Corps of Engineers 404 permit.

PIER #4 SCOUR RIPRAP PROTECTION LAYOUT

c:\pw_work\wfh\d0592534\mt-a-prai201603_ga-c.dgn [Pier #4 Scour Riprap Protection Layout]

17 June 2026 9:53 AM

PROJECT	SHEET NUMBER
MT PRAIRIE 2016(3)	H.1

TEMPORARY TRAFFIC CONTROL DEVICE QUANTITIES

ITEM NO.	DESCRIPTION	UNIT	QUANTITY
63501-0000	TEMPORARY TRAFFIC CONTROL (RIVER TRAFFIC)	LPSM	**ALL**
63502-0600	TEMPORARY TRAFFIC CONTROL, BARRICADE TYPE 3	EACH	**6**
63502-1300	TEMPORARY TRAFFIC CONTROL, DRUM	EACH	**20**

ITEM 63504-1000
TEMPORARY TRAFFIC CONTROL, CONSTRUCTION SIGN

MUTCD NO.	SIGN MESSAGE	SIZE W X H (IN X IN)			AREA (SQFT)	NO. OF SIGNS	QUANTITY (SQFT)
-----	REF-1	66	x	30	13.75	2	27.50
-----	REF-2	66	x	30	13.75	2	27.50
G20-2	"END ROAD WORK"	36	x	18	4.50	2	9.00
R11-2	"ROAD CLOSED"	48	x	30	10.00	2	20.00
W13-1P	"15 MPH"	18	x	18	2.25	2	4.50
W16-2P	"100 FEET"	24	x	18	3.00	2	6.00
W16-2P	"500 FEET"	24	x	18	3.00	2	6.00
W20-1	"ROAD WORK AHEAD"	36	x	36	9.00	2	18.00
W20-3	"ROAD CLOSED AHEAD"	36	x	36	9.00	2	18.00
W20-4	"ONE LANE ROAD AHEAD"	36	x	36	9.00	2	18.00
						TOTAL	**154.50**

TABULATION OF TEMPORARY TRAFFIC CONTROL QUANTITIES

22 April 2026 3:57 PM c:\pw_work\wfl\d0592537\mt-a-prai201603_ta.dgn [Tabulation of Temporary Traffic Control Quantities]

PROJECT	SHEET NUMBER
MT PRAIRIE 2016(3)	H.2

SIGN SPACING TABLE			
ROAD TYPE	DISTANCE BETWEEN SIGNS IN FEET		
	A	B	C
Urban and Rural 30 mph and less	100	100	100
Urban and Rural 35 mph to 50 mph	350	350	350
Rural greater than 50 mph	500	500	500
Expressway / Freeway	1000	1500	2640

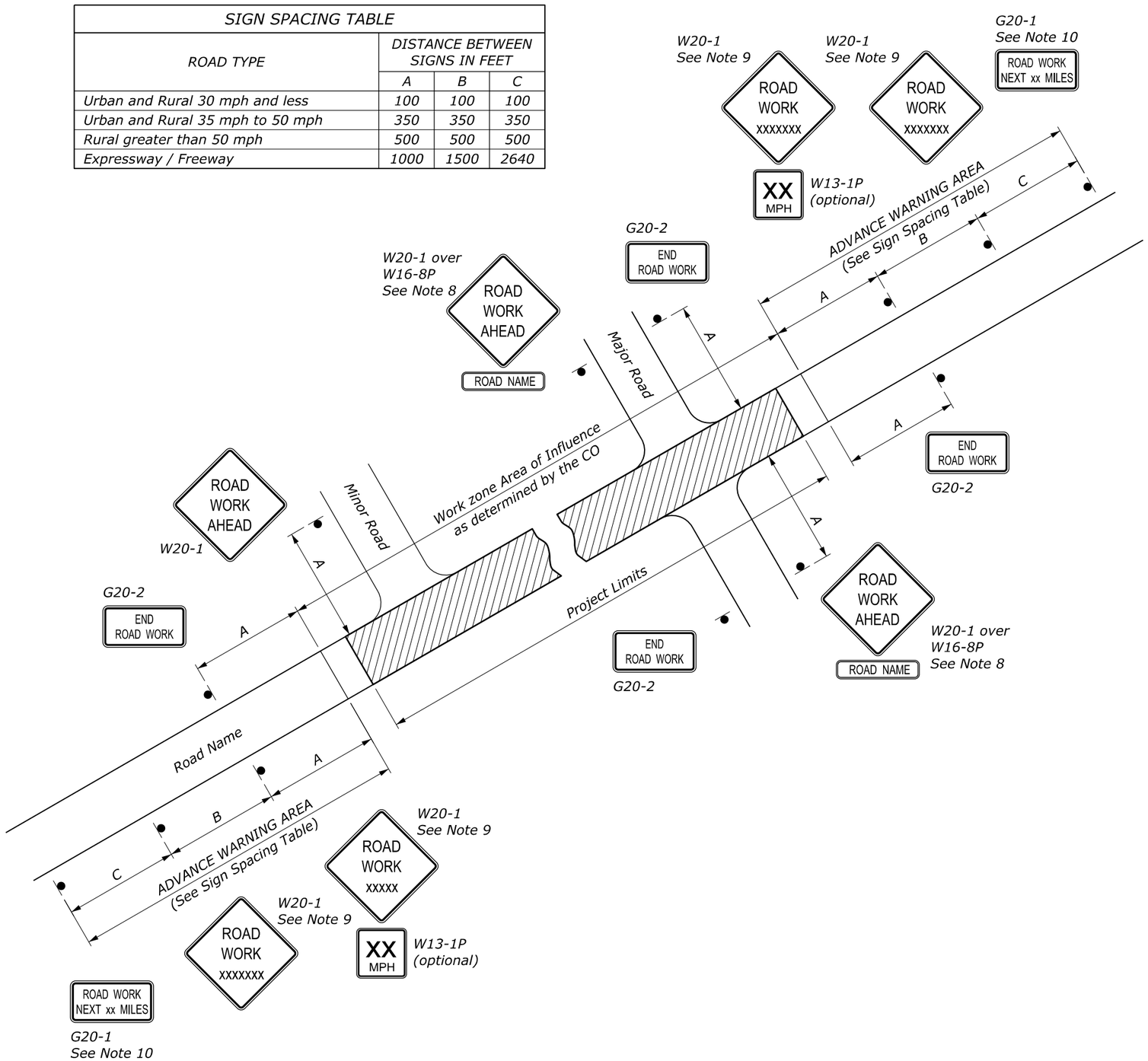

NOTE:

1. Erect all project advance warning signs before starting construction work.
2. Not all details shown on the temporary traffic control sheets may be applicable to this project. The Contractor may add or delete information and details in this traffic control plan as necessary to accommodate actual operations.
3. Where advance warning signs, placed as shown, interfere with permanent signs, locate the warning signs to fit field conditions as approved. Vary messages as required.
4. Install advisory speed plaques under the W20 series warning signs as needed to indicate a maximum recommended speed through the construction area.
5. Ensure all sign supports exposed to traffic are crashworthy.
6. Maintain two-way traffic during all non-work hours except as approved.
7. Do not store traffic control devices along the roadway when not in use. Cover post-mounted signs when not applicable.
8. If W20-1 is placed on a roadway other than that on which the actual construction work occurs, include a supplementary plaque indicating the name of the road on which the construction does occur (applies to major roads only).
9. The message on the W20-1 signs may be ROAD WORK AHEAD or may specify the distance to the work area in feet or in miles. Install an additional W20-1 sign when approach speeds exceed 50 mph. When used, place the two W20-1 signs "B" feet apart according to the Sign Spacing Table.
10. For work zones that are 2 miles or more in length, install G20-1 signs at each end of the project. Show the distance on the G20-1 sign to the nearest whole mile.
11. If signing on a roadway under a jurisdiction other than the client agency, verify that an encroachment permit has been obtained.
12. State standards may be used as an alternative if approved.

NO SCALE

U.S. DEPARTMENT OF TRANSPORTATION, FHWA
OFFICE OF FEDERAL LANDS HIGHWAY

TEMPORARY TRAFFIC CONTROL
ADVANCE SIGNING

FLH STANDARD 635-1
SPECIFICATION FP-24, FP-14
APPROVED FOR USE 2/2024

c:\pw-work\dms00753\Std635-1.dgn [Std 635-1]
3 June 2024 9:44 AM

PROJECT	SHEET NUMBER
MT PRAIRIE 2016(3)	H.3

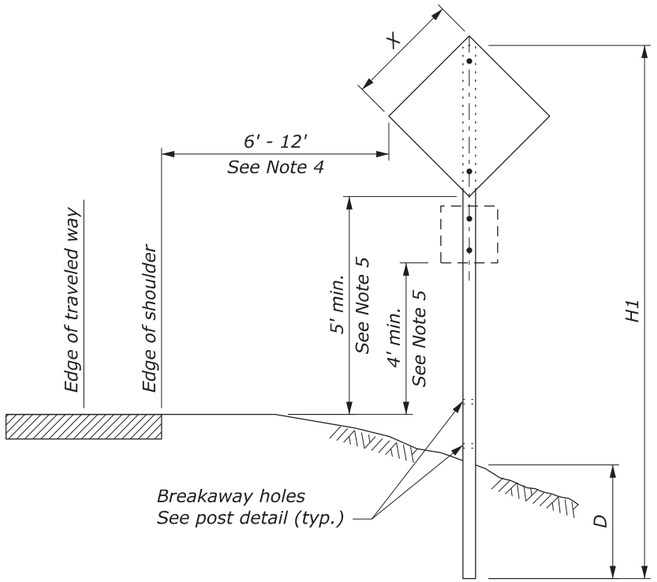

SINGLE POST SIGN

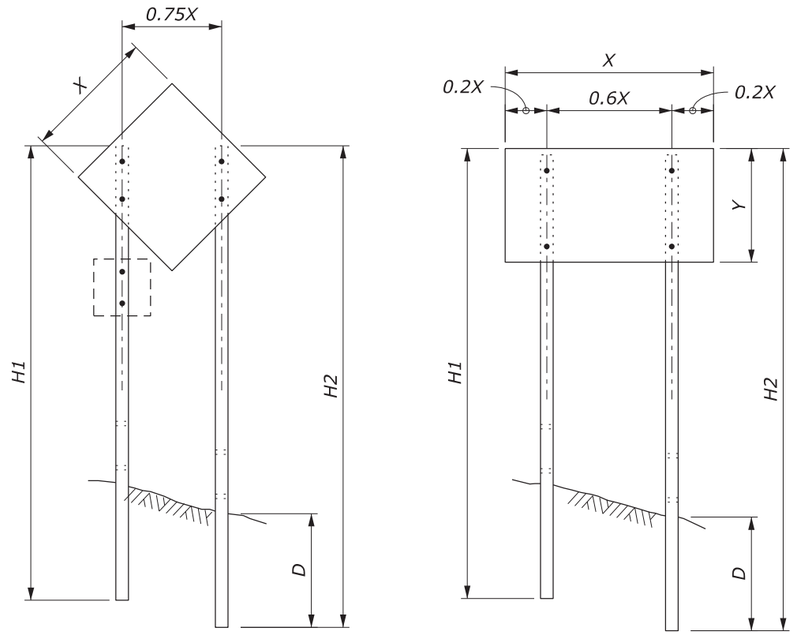

TWO POST SIGN

NOTE:

1. Attach sign panels with a minimum of two ¼" diameter bolts per post.
2. H1 and H2 = Overall post length. Select post lengths to fit field conditions.
3. D = Post embedment depth for average soil conditions.
4. In areas where lateral distance is limited, a minimum lateral offset of 2 ft may be used. In areas with curbs, a minimum lateral distance of 1 ft behind the face of the curb may be used.
5. In pedestrian locations, or in areas with obstructed views, use 7 ft minimum mounting height for main sign and 6 ft minimum mounting height for secondary sign.
6. Use 7 ft minimum spacing between posts for sign posts 6" x 6" or larger.
7. State standards may be used as an alternative if approved.

WOOD POST SELECTION TABLE

WIDTH "X"	AREA (SQFT)	NUMBER OF POSTS	POST SIZE (INCH)	D (INCH)	HOLE SIZE (INCH)
Diamond ≤ 36" Other Shapes ≤ 48"	< 10	1	4 x 4	36	0
		1	4 x 6	48	1.5
Diamond ≤ 48"	10 - 20	1	6 x 6	48	2
Diamond ≤ 48" Other Shapes ≤ 12'	10 - 20	2	4 x 4	36	0
	20 - 50	2	4 x 6	48	1.5
> 13'	50 - 65	2	6 x 6	48	2
12' - 16'	50 - 65	3	4 x 6	48	1.5
> 17'	65 - 95	4	4 x 6	48	1.5
> 30'	65 - 95	3	6 x 6	48	2

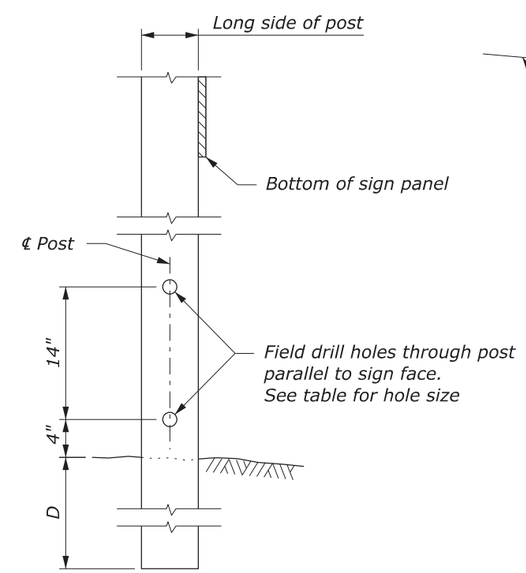

POST DETAIL

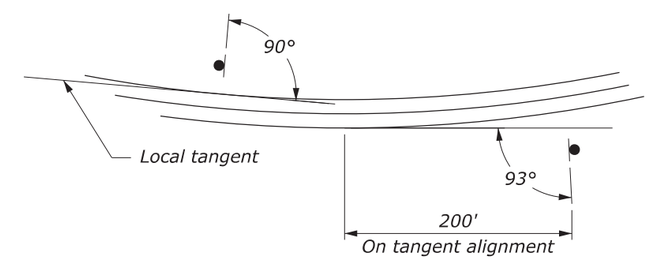

SIGN INSTALLATION ANGLE

NO SCALE

U.S. DEPARTMENT OF TRANSPORTATION, FHWA
OFFICE OF FEDERAL LANDS HIGHWAY

TEMPORARY TRAFFIC CONTROL SIGN INSTALLATION WOOD POSTS

FLH STANDARD 635-14

SPECIFICATION FP-24, FP-14

APPROVED FOR USE 2/2024

c:\pw-work\dms00753\Std635-14.dgn [Std 635-14]
3 June 2024 3:18 PM

PROJECT	SHEET NUMBER
MT PRAIRIE 2016(3)	H.4

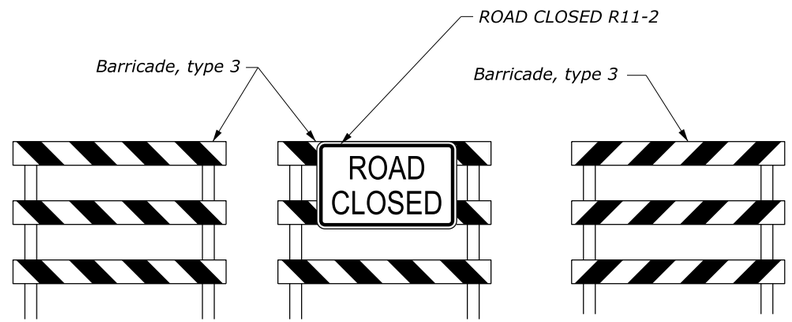

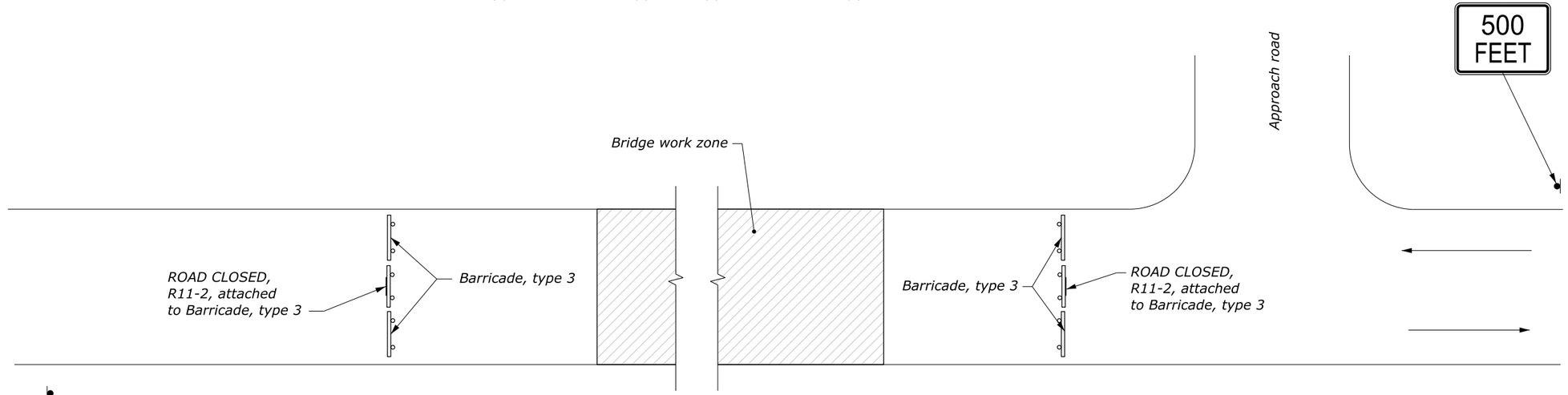

PROJECT SITE

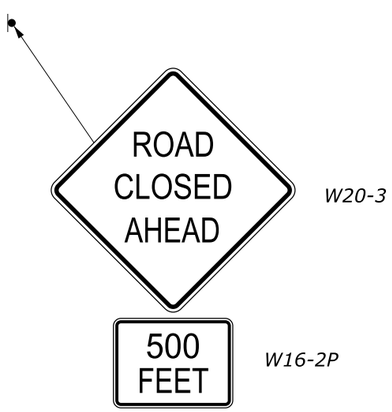

NOTE:

1. Barricade locations are approximate. Exact distance from work zone to be determined by the CO.

ROAD CLOSURE AT BRIDGE DETAIL

22 April 2026 4:04 PM c:\pw_work_wf\d0592537\mt-a-prai201603_tcb.dgn [Road Closure at Bridge Detail]

PROJECT	SHEET NUMBER
MT PRAIRIE 2016(3)	H.5

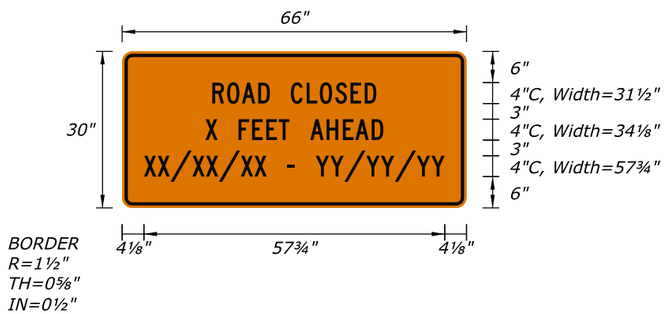

REF-1

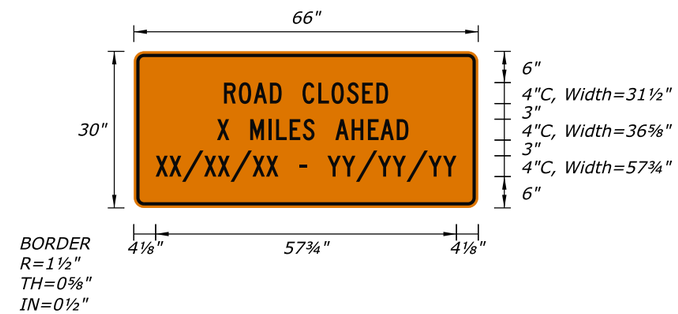

REF-2

NOTE:

1. *Place according to the CO.*

ROAD CLOSURE SIGNS

22 April 2026 4:06 PM c:\pw_work_wf\d0592537\mt-a-prai20163_ts.dgn [Detail - Advanced Road Closed Sign]

PROJECT	SHEET NUMBER
MT PRAIRIE 2016(3)	I.1

PERMANENT SIGN QUANTITIES

ALIGNMENT	STATION	SIDE (LT/RT)	MUTCD NO.	MESSAGE	NO. OF POSTS	PANEL DIMENSIONS (INCHES)	ITEM 20301-2400 REMOVAL OF (EACH)	ITEM 63302-0000 SIGN SYSTEM (SQFT)
"MAIN 01"	101+87.00	RT	W5-3	"ONE LANE BRIDGE"	1	36 x 36	1	9.00
			W13-1P	"15 MPH"		18 x 18		2.25
	102+84.88	RT	R1-2	"YIELD"	1	36 x 36 x 36	-	3.90
			R1-2aP	"TO ONCOMING TRAFFIC"		24 x 18	-	3.00
	115+44.03	LT	R1-2	"YIELD"	1	36 x 36 x 36	-	3.90
			R1-2aP	"TO ONCOMING TRAFFIC"		24 x 18	-	3.00
	115+73.15	LT	R1-1	"STOP"	1	30 x 30	-	6.25
	117+45.78	LT	W5-3	"ONE LANE BRIDGE"	1	36 x 36	1	9.00
			W13-1P	"15 MPH"		18 x 18		2.25
						TOTAL	**2**	**42.55**

ITEM 63309-0000 DELINEATOR

ALIGNMENT	STATION	SIDE (LT/RT)	TYPE	QUANTITY (EACH)
"MAIN 01"	115+58.88	LT	DESIGN A	1
	115+58.73	RT	DESIGN A	1
			TOTAL	**2**

OBJECT MARKER QUANTITIES

ALIGNMENT	STATION	SIDE (LT/RT)	MUTCD NO.	ITEM 20301-2300 REMOVAL OF SIGN/MARKER (EACH)	ITEM 63308-0000 OBJECT MARKER (EACH)
"MAIN 01"	103+91.40	LT	OM-3L	1	1
		RT	OM-3R	1	1
	114+77.00	LT	OM-3L	1	1
		RT	OM-3R	1	1
			TOTAL	**4**	**4**

TABULATION OF PERMANENT TRAFFIC CONTROL QUANTITIES

22 April 2026 4:12 PM c:\pw_work_wfl\d0592538\mt-a-prai201603_pb.dgn [Tabulation of Permanent Traffic Control Quantities]

PROJECT	SHEET NUMBER
MT PRAIRIE 2016(3)	I.2

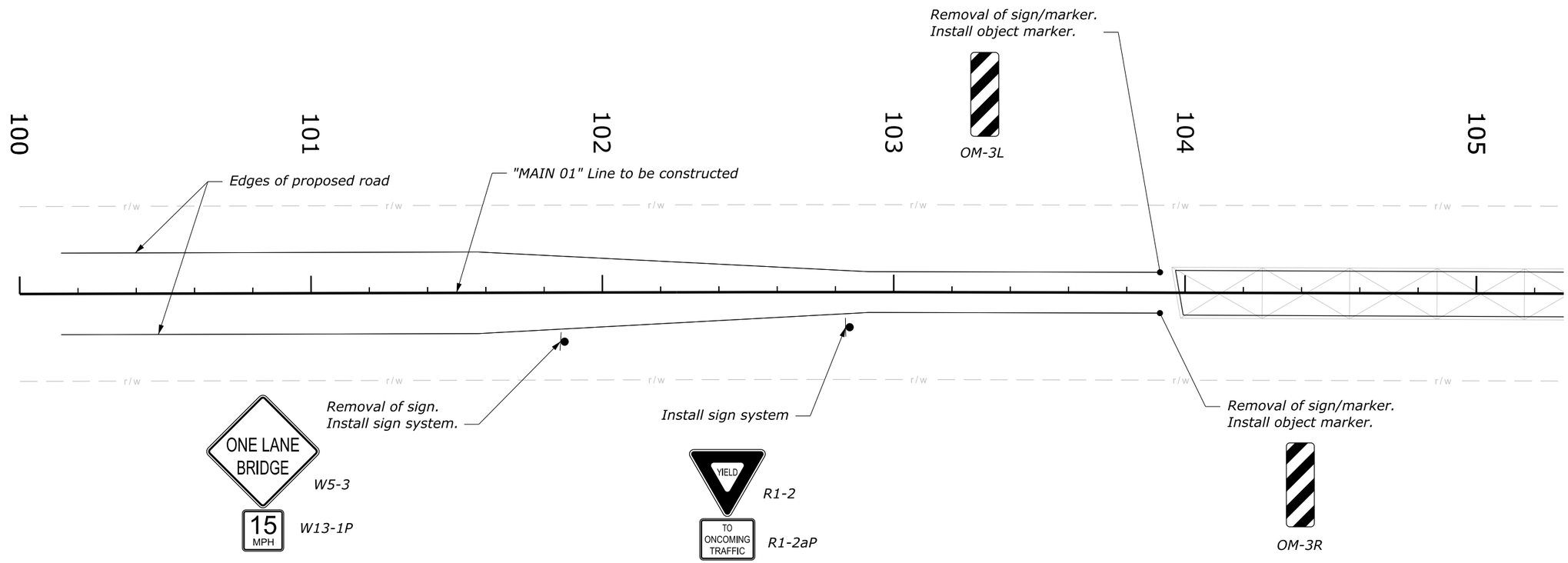

PERMANENT TRAFFIC CONTROL PLAN (1 OF 2)

c:\pw_work_wdf\d0592538\mt-a-prai201603_pb.dgn [Permanent Traffic Control Plan (1 of 2)]
22 April 2026 4:12 PM

PROJECT	SHEET NUMBER
MT PRAIRIE 2016(3)	I.3

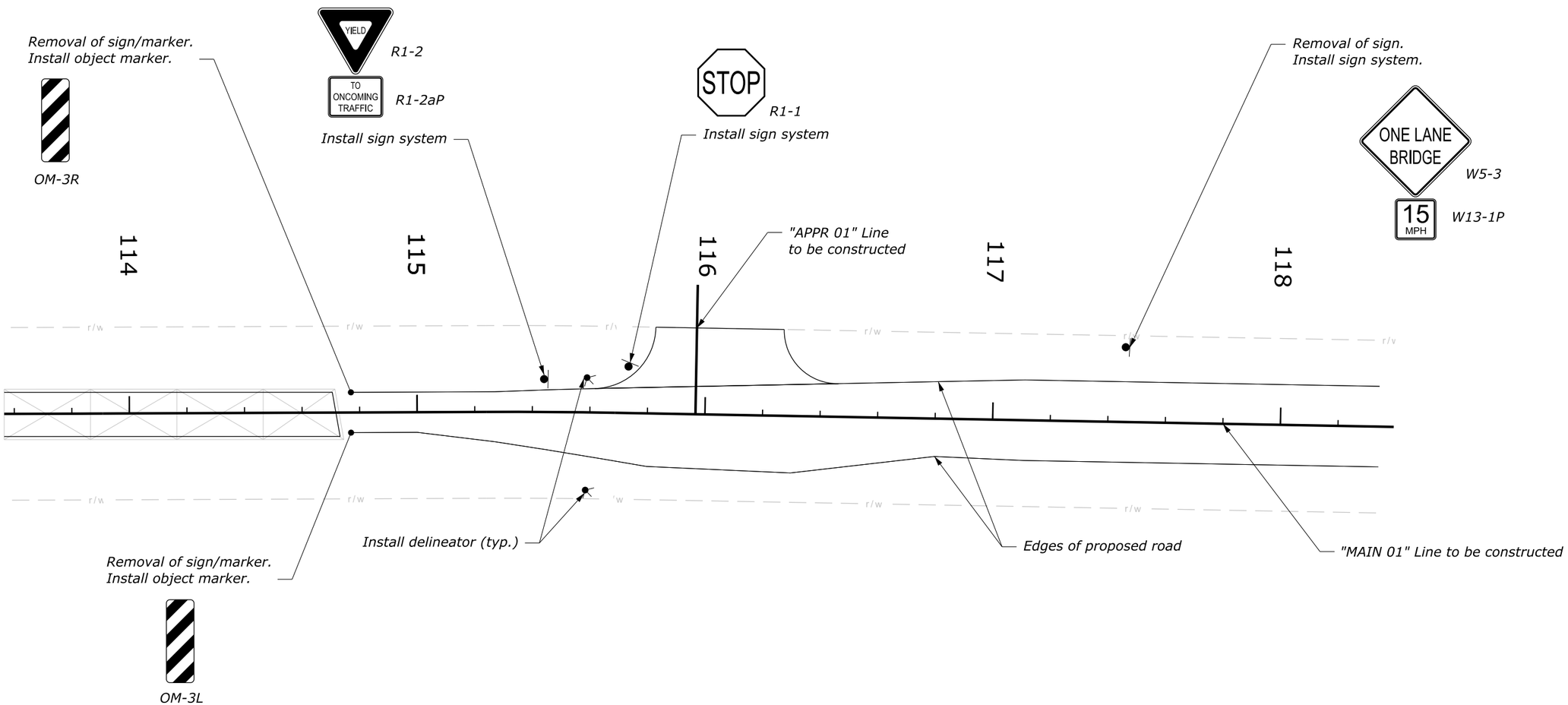

PERMANENT TRAFFIC CONTROL PLAN (2 OF 2)

c:\pw_work_wfl\d0592338\mt-a-prai201603_pb.dgn [Permanent Traffic Control Plan (2 of 2)]
22 April 2026 4:12 PM

PROJECT	SHEET NUMBER
MT PRAIRIE 2016(3)	I.4

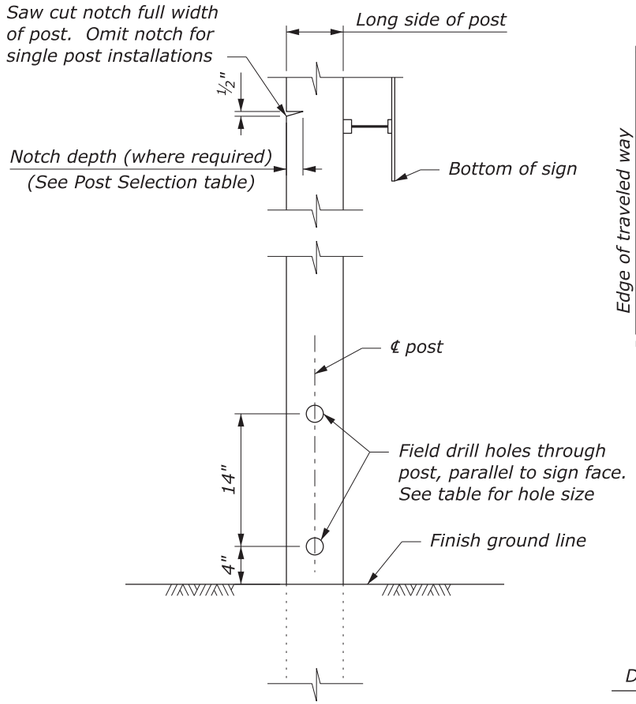

POST DETAIL

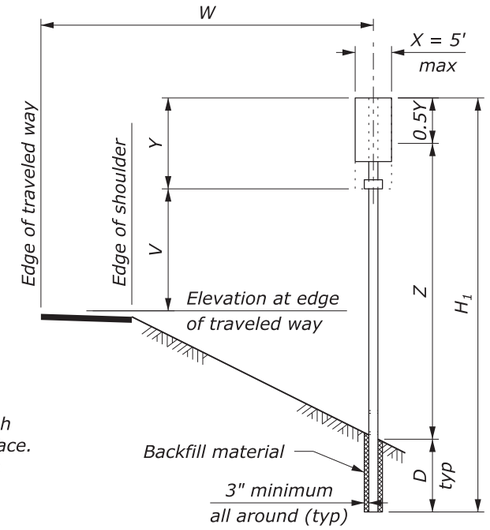

SINGLE POST SIGNS

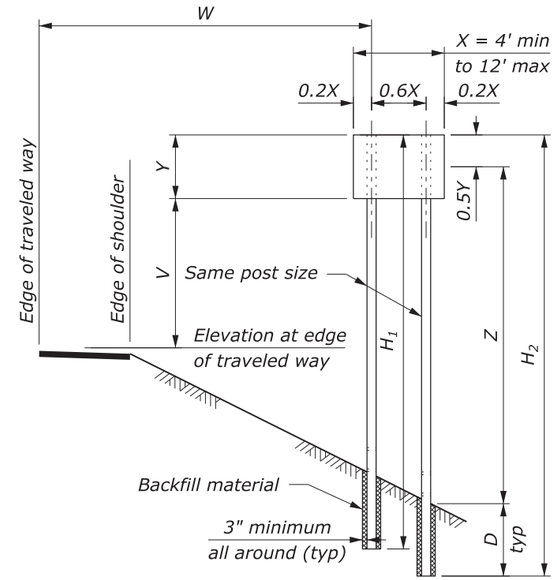

TWO POST SIGNS

NOTE:

1. Provide traffic barrier protection for all posts larger than 6 x 8 inches when located within the clear zone or if the post is vulnerable to being struck when placed outside the clear zone.
2. H_1 thru H_4 indicate overall post length. Select post lengths to fit field conditions.
3. D is the minimum post embedment depth for average soil conditions. See Wood Post Selection Table below.
4. Z is the height from ground line to mid-height of sign at the longest post.
5. For the purpose of post selection X and Y are as follows:
   - Overall dimensions of the sign for a single sign, or back to back signs
   - Dimensions of a rectangle enclosing all the signs for multiple sign installations.

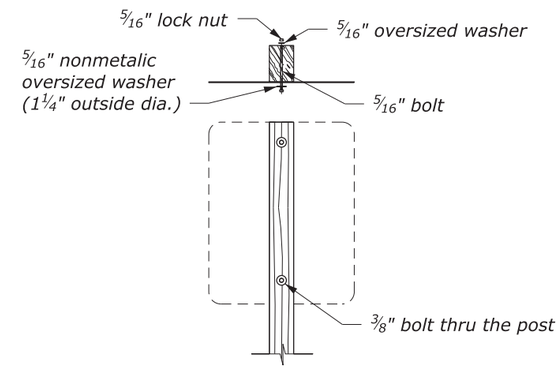

TYPICAL MOUNTING FOR SIGNS WITHOUT ANGLES

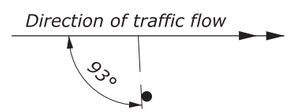

SIGN INSTALLATION ANGLE

For all retroflectorized signs where W > 25'

MINIMUM DISTANCE TO SIGN		
Location	Lateral Offset (W)	Mounting Height (V)
Rural Districts	6 ft	5 ft
Business or Residence Districts	2 ft from curb	7 ft

V may be reduced by 1 foot in rural districts for a secondary sign mounted below another sign.

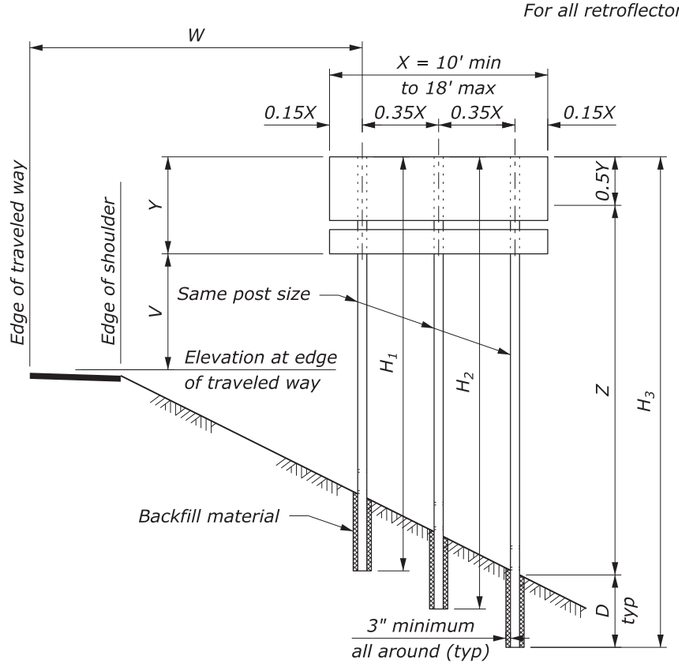

THREE POST SIGNS

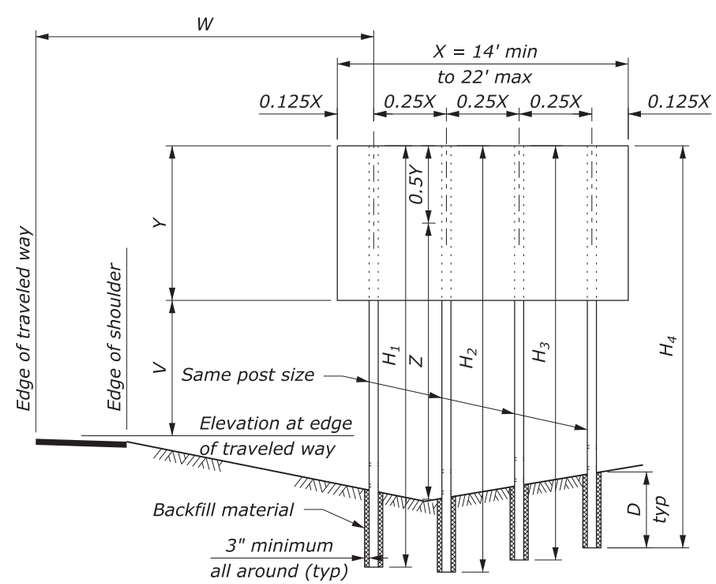

FOUR POST SIGNS

WOOD POST SELECTION TABLE						
POST SIZE (inch)	NUMBER OF POSTS				D	Notch depth and hole diameter
	1	2	3	4		
	Product of X-Y-Z in CUFT					
4 x 4	80	155	235	310	3'-0"	-
4 x 6	180	385	545	725	4'-0"	1 3/4"
6 x 6	235	475	710	950	4'-0"	1 3/4"
6 x 8	300	850	1280	1700	4'-0"	2 1/2"
6 x 10	385	1180	1170	2360	5'-0"	-
8 x 10	575	1610	2410	3215	5'-0"	-
8 x 12	775	2310	3465	4620	6'-0"	-

Values shown are the maximum permitted. If the product of XYZ exceeds the limit for the largest post, use steel post installation.

NO SCALE

U.S. DEPARTMENT OF TRANSPORTATION, FHWA
OFFICE OF FEDERAL LANDS HIGHWAY

PERMANENT SIGN INSTALLATION WOOD POSTS

WFL STANDARD
W633-7

SPECIFICATION
FP-24, FP-14

APPROVED FOR USE
9/2024

c:\pw-work\dms43148\W633-7.dgn [Std W633-7]
17 March 2025 11:53 AM

PROJECT	SHEET NUMBER
MT PRAIRIE 2016(3)	I.5

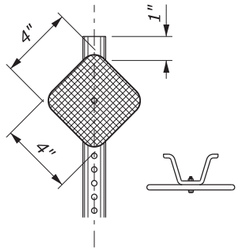

DESIGN A

(WHITE)

Use for delineation on tangents and on curves with R > 1500'.

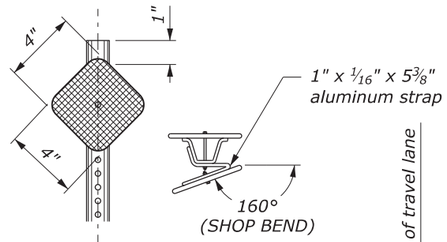

DESIGN C

(WHITE)

Use on curves with R ≤ 575'

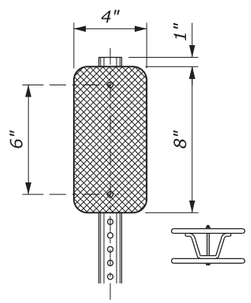

DESIGN D

(YELLOW)

Use at approaches with Stop or Yield signs.

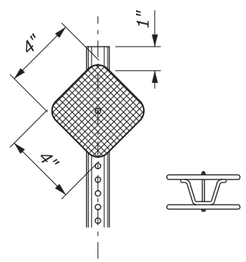

DESIGN F

(WHITE)

Use for curves with R > 575' and R ≤ 1500'.

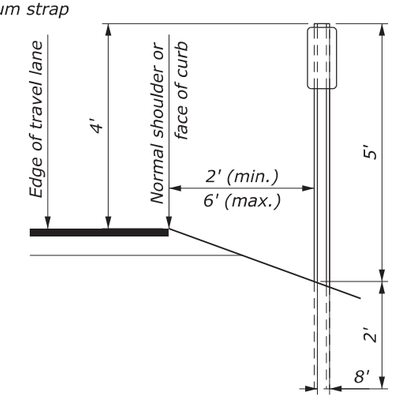

TYPICAL INSTALLATION

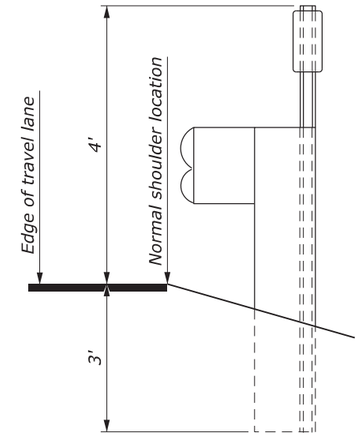

TYPICAL INSTALLATION WITH BEAM TYPE GUARD RAIL

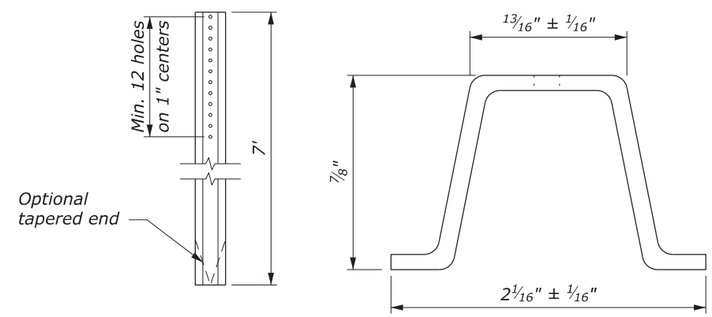

DELINEATOR POST DETAILS

Rigid Steel or Aluminum

NOTE:

1. When the contract does not include the final surfacing, allow for the thickness of the final pavement structure when establishing the elevation of the traffic delineators.
2. Place delineators at a constant clearance distance from the edge of pavement except where guardrail or other obstructions interfere. Align delineators with the inside edge of obstruction. Install delineators located behind beam guardrail so that the delineator post is adjacent to the trailing edge of the nearest guardrail post. (See typical installation with beam type guardrail).
3. When a delineator falls within a cross road or approach, the delineator may be moved in either direction a distance not to exceed one quarter of the normal spacing. Eliminate the post if this allowance is exceeded.
4. Mount delineators on metal posts with 3/16" cadmium plated bolt(s). Drill or punch a minimum of twelve 3/8" diameter holes on 1-inch centers from the top of the post. 3/8" square holes may be used with large-headed bolt or an appropriate washer. Jam threads after tightening the nut to prevent removal.
5. All delineator reflectors have 3/4" corner radii.
6. Manufacture posts from flanged U-channel sections of steel meeting the requirements of ASTM A 36 and weighing not less than 1.25 pounds per foot or aluminum meeting the requirements of ASTM B 221, Alloy 6061-T6, with a minimum thickness of 0.125 inches. After fabrication galvanize steel posts in accordance with ASTM A 123.
7. When a route has a current ADT of 900 or greater, continuously delineate the roadway along the shoulder by means of post mounted reflectors. Spacing on tangent sections is 400 feet.

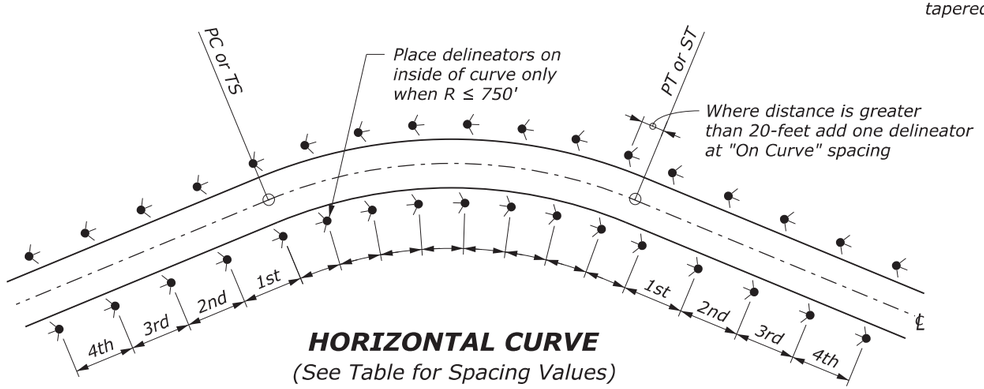

HORIZONTAL CURVE

(See Table for Spacing Values)

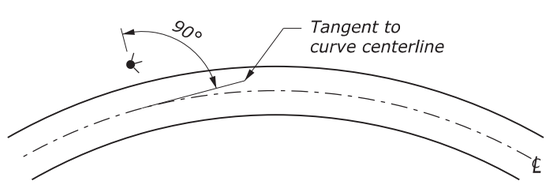

SIGN INSTALLATION ANGLE

HORIZONTAL CURVES					
RADIUS (ft)	SPACING ON CURVE (ft)	SPACING IN ADVANCE OF & BEYOND CURVE (ft)			
		1st SPACE	2nd SPACE	3rd SPACE	4th SPACE
≥ 5700	300	400	400	400	400
3000 to < 5700	225	400	400	400	400
2000 to < 3000	160	320	400	400	400
1500 to < 2000	130	260	400	400	400
1000 to < 1500	110	220	330	400	400
700 to < 1000	90	185	275	400	400
500 to < 700	75	150	230	300	400
300 to < 500	60	125	185	300	400
< 300	45	90	140	275	400

NO SCALE

U.S. DEPARTMENT OF TRANSPORTATION
FEDERAL HIGHWAY ADMINISTRATION
OFFICE OF FEDERAL LANDS HIGHWAY

WFLHD DETAIL

MONTANA DELINEATORS

DETAIL APPROVED FOR USE 11/2006
REVISED: 1/2008

DETAIL W633-60

c:\pw-work\dms43148\W633-60.dgn [Det W633-60]
21 February 2023 3:35 PM

STATE	PROJECT	SHEET NO.
MT	PRAIRIE 2016(3)	S.1

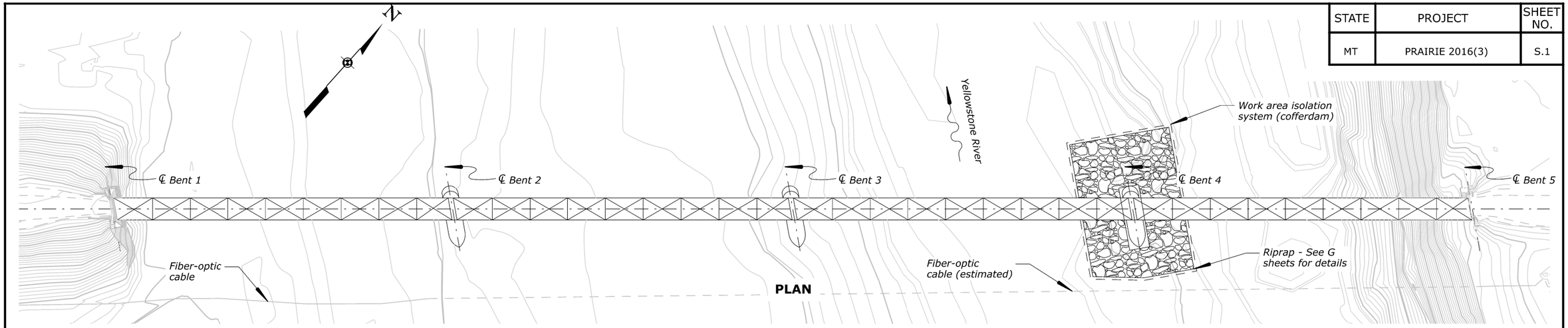

PLAN

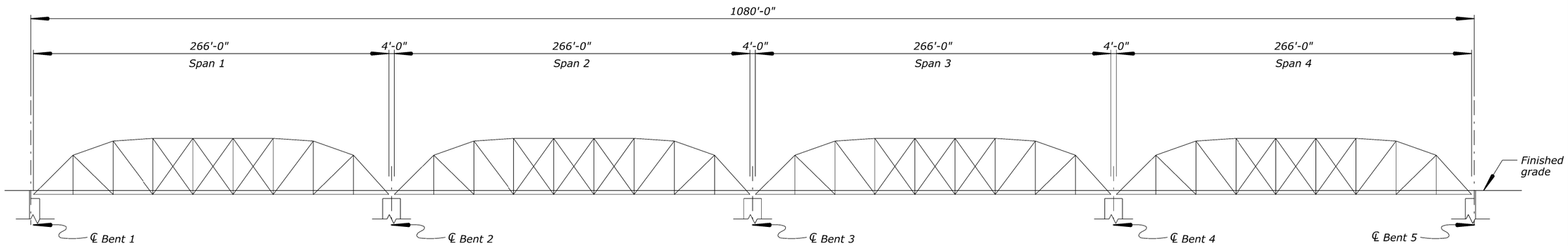

ELEVATION

Scope of Work:

1. *Install debris shield and asbestos containment according to Section 203*
2. *Remove existing bridge rails (W-beam and cable rail)*
3. *Remove existing deck (steel and timber planks, timber curbs and beams)*
4. *Clean-up, modify and improve Bents 1 and 5*
5. *Install proposed steel floorbeam system*
6. *Install proposed open grid steel deck*
7. *Install proposed bridge rail*

U.S. DEPARTMENT OF TRANSPORTATION
FEDERAL HIGHWAY ADMINISTRATION
WESTERN FEDERAL LANDS HIGHWAY DIVISION

PRAIRIE COUNTY, MT

CALYPSO-MILWAUKEE BRIDGE

PLAN AND ELEVATION

NO.	DATE	BY	REVISIONS	NO.	DATE	BY	REVISIONS	DESIGNED BY	DRAWN BY	CHECKED BY	SCALE	PROJECT TEAM LEADER	BRIDGE DRAWING	DATE	DRAWING NO.
								C. WILLIAMS	B. OLTMANN	O. ELTAYEB	1" = 40'-0"	B. OTLMANN	1 of 13	MARCH 2026	RG3317-A

ACTUAL FILE: XXXX .DGN
c:\pw-work\d0448686\S.1 MT PRAIRIE 2016(3) - Plan and Elev.DGN [Default]
31 March 2026 3:58 PM

STATE	PROJECT	SHEET NO.
MT	PRAIRIE 2016(3)	S.2

GENERAL NOTES:

SPECIFICATIONS:

Design:
AASHTO LRFD Bridge Design Specifications, 9th Edition, 2020.

Construction:
Standard Specifications for Construction of Roads and Bridges on Federal Highway Projects, FP-14.

DESIGN LOADS:

Dead Load:
Concrete: 150 lbs. per cubic foot.
Structural Steel: 490 lbs. per cubic foot.

Live Loads:
HL-93. Maximum Dynamic Load Allowance (Impact), IM=33%, applied to design truck only.

MATERIALS:

Design stresses:

Minor Concrete: f'c= 4,500 psi

Reinforcing Steel: fy = 60,000 psi

Cast-in-place Concrete:
Furnish Minor Concrete for bent backwall modifications and fill at metal deck joints.

Reinforcing Steel:
Furnish reinforcing steel conforming to AASHTO M 31, or M 322, Grade 60 deformed. Use minimum concrete cover to the face of any bar of 2 inches, unless noted otherwise on the plans. Minimum splice lengths for all bar sizes are shown on the plans. Provide epoxy coated reinforcing steel, as noted on the bar list.

Structural Steel:
Furnish structural steel, and railing components conforming to ASTM AASHTO M270, Grade 50
Galvanize all structural steel, including floorbeams, open grate metal deck and accessories according to ASTM A123
Furnish bolts, nuts, and threaded rods conforming to ASTM F3125, Grade A325, Type 1, Heavy Hex Style, Galvanized, unless noted.

INDEX OF BRIDGE PLAN SHEETS

SHEET NO.	SHEET TITLE
S.1	PLAN AND ELEVATION
S.2	GENERAL NOTES
S.3	SINGLE SPAN PLAN AND ELEVATION
S.4	TYPICAL SECTION
S.5	BENT CLEANUP PLAN
S.6	BENT IMPROVEMENTS
S.7	DECK FRAMING LAYOUT
S.8	TYPICAL SECTION DETAILS
S.9	DECK PANEL LAYOUT
S.10	DECK PANEL STUD SPACING
S.11	EXPANSION BOLT SPACING
S.12	RAIL POST DETAILS
S.13	RAIL POST CLEARANCE DETAILS

ESTIMATE OF QUANTITIES

ITEM NO.	DESCRIPTION	QUANTITY	UNIT	NOTES
20302-0150	Removal of bridge rail	2160	LNFT	(1)
20303-0200	Removal of bridge deck	1520	SQYD	(1)
55222-0000	Repair Concrete (Bent Improvement)	ALL	LPSM	(2)
55502-0000	Structural steel, furnished, fabricated, and erected (floorbeams, open grate steel deck, miscellaneous steel)	382000	LB	(1)
55601-0900	Bridge railing, steel	2170	LNFT	(1)
56202-0000	Temporary support structure (work platform)	ALL	LPSM	
56320-0000	Containment system and worker protection	ALL	LPSM	

(1) Contract Quantity
(2) Information Only Quantity:
Minor Concrete = 12 CUYD
Reinfrocing Steel = 900 LB

U.S. DEPARTMENT OF TRANSPORTATION
FEDERAL HIGHWAY ADMINISTRATION
WESTERN FEDERAL LANDS HIGHWAY DIVISION

PRAIRIE COUNTY, MT

CALYPSO-MILWAUKEE BRIDGE

GENERAL NOTES

NO.	DATE	BY	REVISIONS	NO.	DATE	BY	REVISIONS	DESIGNED BY	DRAWN BY	CHECKED BY	SCALE	PROJECT TEAM LEADER	BRIDGE DRAWING	DATE	DRAWING NO.
								C. WILLIAMS	C. WILLIAMS	O. ELTAYEB	NO SCALE	B. OTLMANN	2 of 13	MARCH 2026	RG3317-B

31 March 2026 4:11 PM c:\pw-work\d0448686\S.1 MT PRAIRIE 2016(3) - Plan and Elev.DGN [Default] ACTUAL FILE: XXXX .DGN

STATE	PROJECT	SHEET NO.
MT	PRAIRIE 2016(3)	S.3

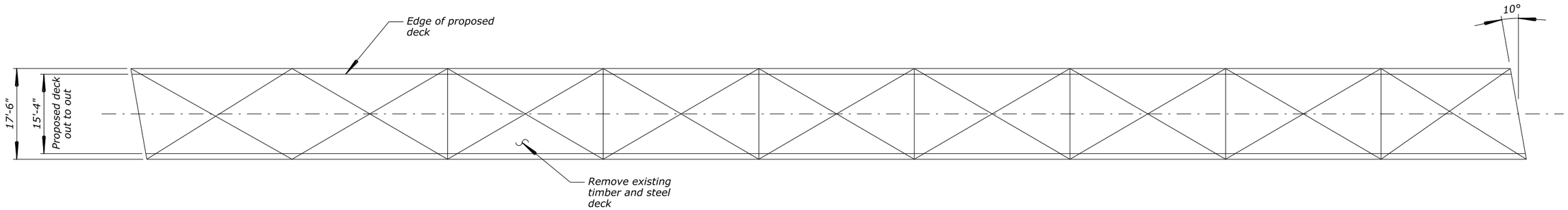

PLAN

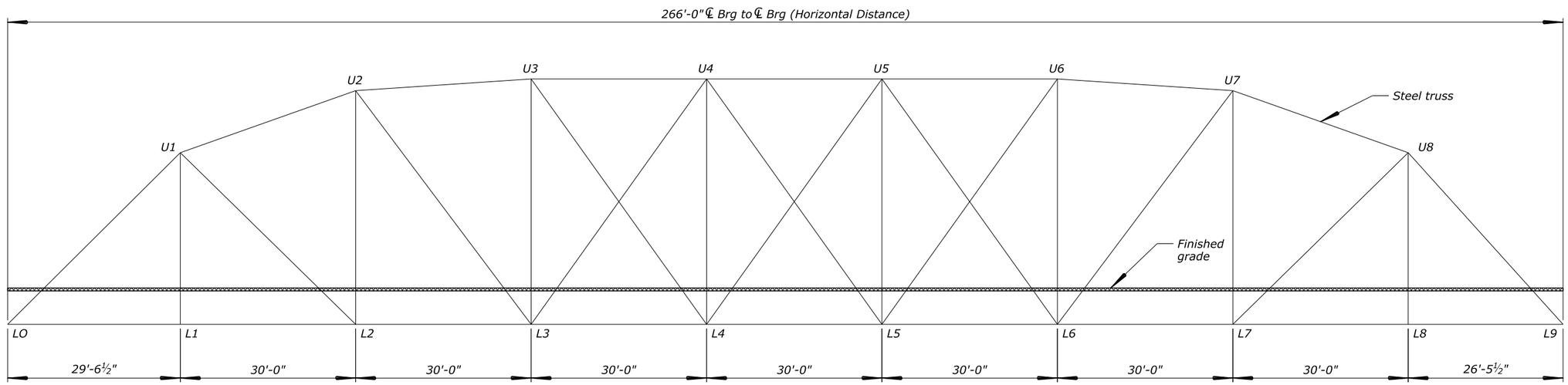

ELEVATION

U.S. DEPARTMENT OF TRANSPORTATION
FEDERAL HIGHWAY ADMINISTRATION
WESTERN FEDERAL LANDS HIGHWAY DIVISION

PRAIRIE COUNTY, MT

CALYPSO-MILWAUKEE BRIDGE

SINGLE SPAN PLAN AND ELEVATION

NO.	DATE	BY	REVISIONS	NO.	DATE	BY	REVISIONS	DESIGNED BY	DRAWN BY	CHECKED BY	SCALE	PROJECT TEAM LEADER	BRIDGE DRAWING	DATE	DRAWING NO.
								C. WILLIAMS	B. OLTMANN	O. ELTAYEB	1" = 10'-0"	B. OTLMANN	3 of 13	MARCH 2026	RG3317-C

ACTUAL FILE: XXXX .DGN
c:\pw-work\d0448686\S.2 MT PRAIRIE 2016(3) - Truss Span PE.DGN [Default]
31 March 2026 5:00 PM

STATE	PROJECT	SHEET NO.
MT	PRAIRIE 2016(3)	S.4

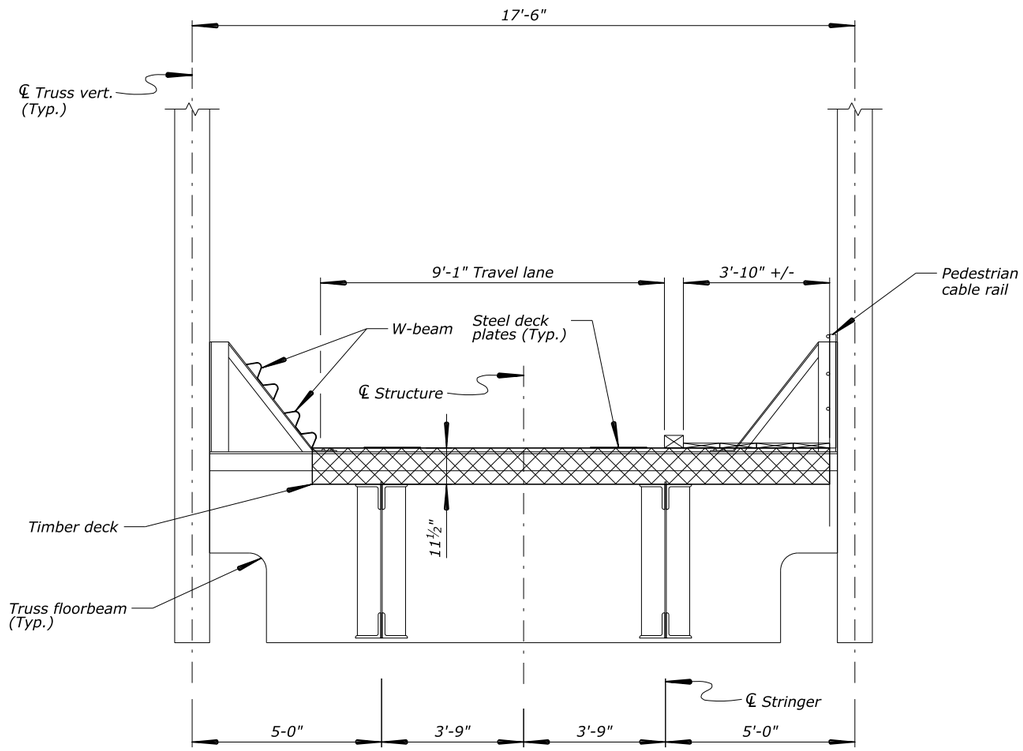

TYPICAL EXISTING SECTION

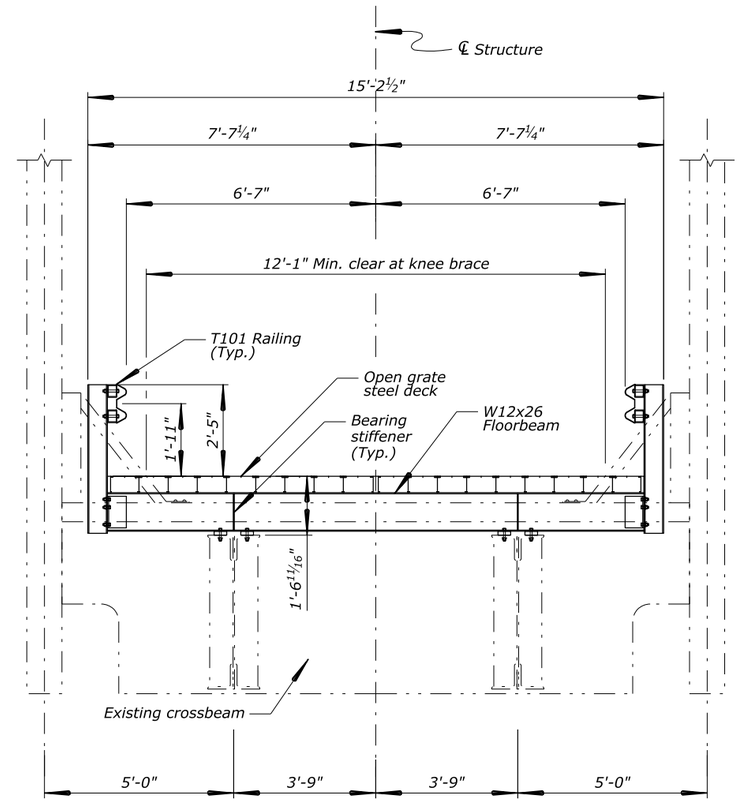

TYPICAL PROPOSED SECTION

NOTE:

1. *Remove existing timber deck, w-beam rails, and pedestrian cable rail*

U.S. DEPARTMENT OF TRANSPORTATION
FEDERAL HIGHWAY ADMINISTRATION
WESTERN FEDERAL LANDS HIGHWAY DIVISION

PRAIRIE COUNTY, MT

CALYPSO-MILWAUKEE BRIDGE

TYPICAL SECTION

NO.	DATE	BY	REVISIONS	NO.	DATE	BY	REVISIONS	DESIGNED BY	DRAWN BY	CHECKED BY	SCALE	PROJECT TEAM LEADER	BRIDGE DRAWING	DATE	DRAWING NO.
								C. WILLIAMS	B. Oltmann	O. ELTAYEB	1/2" = 1'-0"	B. OTLMANN	4 of 13	MAY 2026	RG3317-D

ACTUAL FILE: XXXX .DGN
c:\pw-work\d0448686\S.3 MT PRAIRIE 2016(3) - TYPXS.DGN [Default]
14 May 2026 4:22 PM

STATE	PROJECT	SHEET NO.
MT	PRAIRIE 2016(3)	S.5

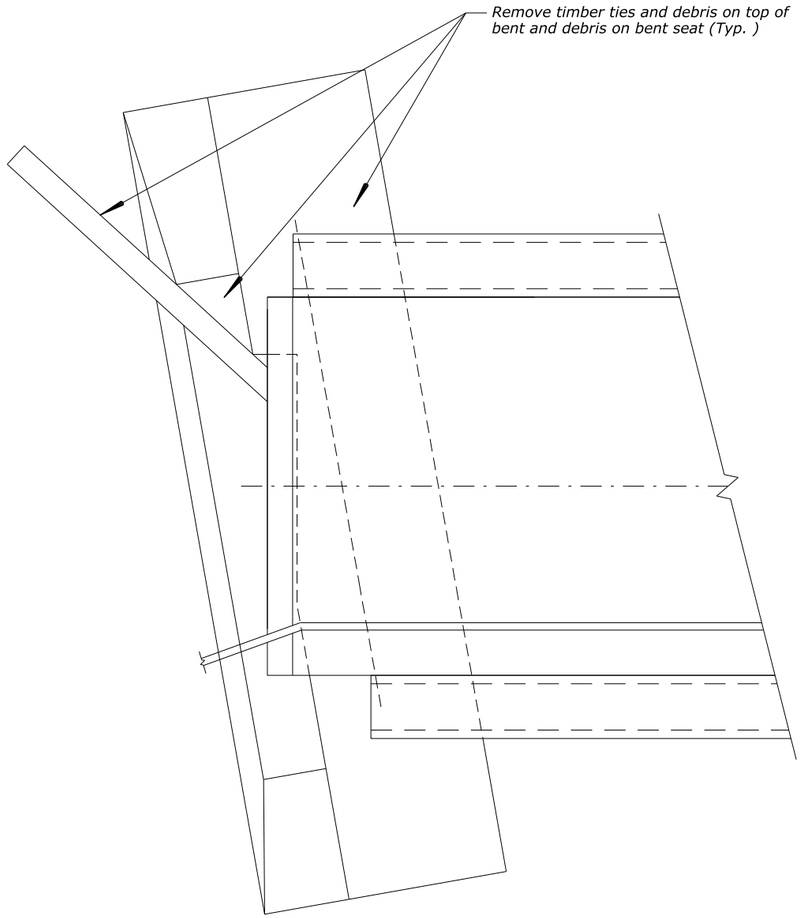

BENT CLEANUP PLAN

(Bent 1 shown, bent 5 similar)

TYPICAL BENT

(Bent 1 shown, bent 5 similar)

Note:
Remove all debris and obstructions to provide a clean, debris-free bent seat at Bents 1 & 5.

U.S. DEPARTMENT OF TRANSPORTATION
FEDERAL HIGHWAY ADMINISTRATION
WESTERN FEDERAL LANDS HIGHWAY DIVISION

PRAIRIE COUNTY, MT

CALYPSO-MILWAUKEE BRIDGE

BENT CLEANUP PLAN

NO.	DATE	BY	REVISIONS	NO.	DATE	BY	REVISIONS	DESIGNED BY	DRAWN BY	CHECKED BY	SCALE	PROJECT TEAM LEADER	BRIDGE DRAWING	DATE	DRAWING NO.
								C. WILLIAMS	C. WILLIAMS	O. ELTAYEB	NO SCALE	B. OTLMANN	5 of 13	MARCH 2026	RG3317-E

31 March 2026 4:09 PM c:\pw-work\d0448686\S.5 MT PRAIRIE 2016(3) - Bent Cleanup Plan.DGN [Default] ACTUAL FILE: XXXX .DGN

STATE	PROJECT	SHEET NO.
MT	PRAIRIE 2016(3)	S.6

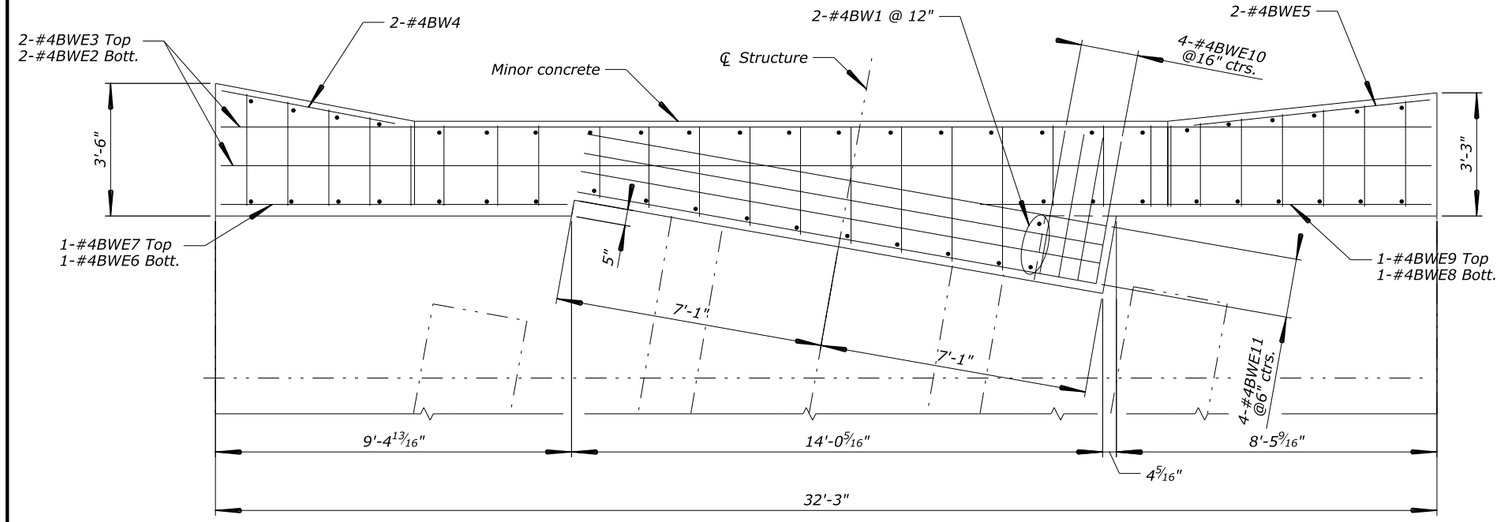

BENT 1 PLAN

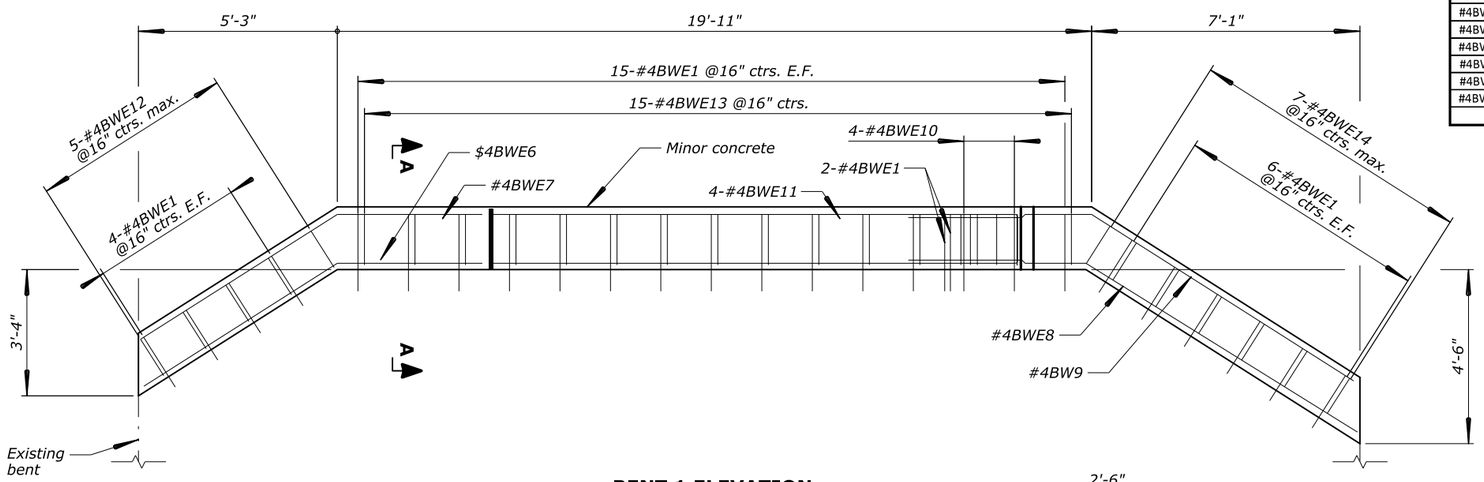

BENT 1 ELEVATION

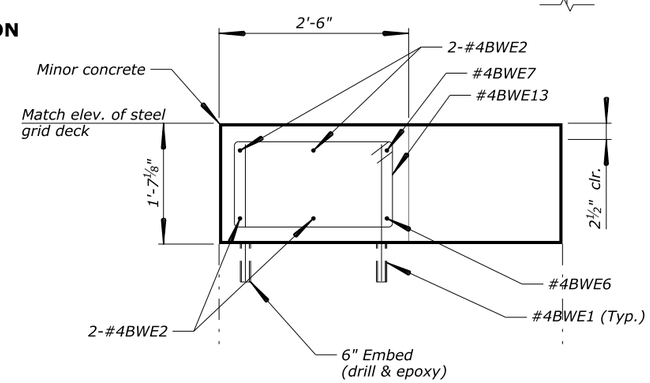

SECTION A

REINFORCING STEEL SCHEDULE						DIMENSION TABLE						
BENT 1												
BAR MK	SIZE	TYPE	QTY	LENGTH	WEIGHT	A	B	C	D	E	G	N
#4BWE1A	4	STR	20	1-7	21.2							
#4BWE1B	4	STR	32	1-10	39.2							
#4BWE2	4	29	2	34-1	45.5	19-11	6-0	8-2	5-1	3-2 1/2"	4-4 1/2"	6-11
#4BWE3	4	29	2	34-1	45.5	19-9	6-1	8-3	5-2	3-3	4-5	6-11 1/2"
#4BWE4	4	STR	2	5-8	7.6							
#4BWE5	4	STR	2	7-7	10.1							
#4BWE6	4	28	1	10-0	6.7	6-0	4-0	5-1	3-2 1/2"			
#4BWE7	4	28	1	10-0	6.7	6-1	3-11	5-2	3-3			
#4BWE8	4	28	1	13-0	9.2	8-2	4-10	6-11	4-4 1/2"			
#4BWE9	4	28	1	13-0	8.7	8-3	4-9	6-11 1/2"	4-5			
#4BWE10	4	17	4	8-10	23.6		1-2	3-10	3-10			
#4BWE11	4	17	4	29-1	77.7		1-1	14-0	14-0			
#4BWE12A	4	T1	1	8-8	5.8	4 1/2"	3-0	1-1 1/2"	3-0	1-1 1/2"	4 1/2"	
#4BWE12B	4	T1	1	8-2	5.5	4 1/2"	2-9	1-1 1/2"	2-9	1-1 1/2"	4 1/2"	
#4BWE12C	4	T1	1	7-10	5.2	4 1/2"	2-7	1-1 1/2"	2-7	1-1 1/2"	4 1/2"	
#4BWE12D	4	T1	1	7-4	4.9	4 1/2"	2-4	1-1 1/2"	2-4	1-1 1/2"	4 1/2"	
#4BWE12E	4	T1	1	7-0	4.7	4 1/2"	2-2	1-1 1/2"	2-2	1-1 1/2"	4 1/2"	
#4BWE13A	4	T1	6	7-5	29.7	4 1/2"	2-2	1-2	2-2	1-2	4 1/2"	
#4BWE13B	4	T1	1	6-9	4.5	4 1/2"	1-10	1-2	1-10	1-2	4 1/2"	
#4BWE13C	4	T1	1	7-3	4.8	4 1/2"	2-1	1-2	2-1	1-2	4 1/2"	
#4BWE13D	4	T1	1	7-7	5.1	4 1/2"	2-3	1-2	2-3	1-2	4 1/2"	
#4BWE13E	4	T1	1	8-1	5.4	4 1/2"	2-6	1-2	2-6	1-2	4 1/2"	
#4BWE13F	4	T1	1	8-7	5.7	4 1/2"	2-9	1-2	2-9	1-2	4 1/2"	
#4BWE13G	4	T1	1	9-1	6.1	4 1/2"	3-0	1-2	3-0	1-2	4 1/2"	
#4BWE13H	4	T1	1	9-7	6.4	4 1/2"	3-3	1-2	3-3	1-2	4 1/2"	
#4BWE13I	4	T1	1	10-1	6.7	4 1/2"	3-6	1-2	3-6	1-2	4 1/2"	
#4BWE13J	4	T1	1	10-5	7.0	4 1/2"	3-8	1-2	3-8	1-2	4 1/2"	
#4BWE14A	4	T1	1	7-0	4.7	4 1/2"	2-2	1-1 1/2"	2-2	1-1 1/2"	4 1/2"	
#4BWE14B	4	T1	1	7-2	4.8	4 1/2"	2-3	1-1 1/2"	2-3	1-1 1/2"	4 1/2"	
#4BWE14C	4	T1	1	7-4	4.9	4 1/2"	2-4	1-1 1/2"	2-4	1-1 1/2"	4 1/2"	
#4BWE14D	4	T1	1	7-6	5.0	4 1/2"	2-5	1-1 1/2"	2-5	1-1 1/2"	4 1/2"	
#4BWE14E	4	T1	1	7-10	5.2	4 1/2"	2-7	1-1 1/2"	2-7	1-1 1/2"	4 1/2"	
#4BWE14F	4	T1	1	8-0	5.3	4 1/2"	2-8	1-1 1/2"	2-8	1-1 1/2"	4 1/2"	
#4BWE14G	4	T1	1	8-4	5.6	4 1/2"	2-10	1-1 1/2"	2-10	1-1 1/2"	4 1/2"	
INFORMATION ONLY SUBTOTAL (EPOXY)					450.0							

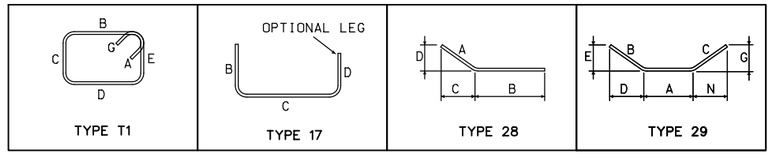

NOTE:

1. *Bent 1 shown, similar improvement plan for Bent 5.*
2. *The suffix E denotes epoxy coated reinforcement*

KEY:

E.F. = Each Face
Top = Top
Bott. = Bottom
BWE =Backwall Epoxy Bar

U.S. DEPARTMENT OF TRANSPORTATION
FEDERAL HIGHWAY ADMINISTRATION
WESTERN FEDERAL LANDS HIGHWAY DIVISION

PRAIRIE COUNTY, MT

CALYPSO-MILWAUKEE BRIDGE

BENT IMPROVEMENTS

NO.	DATE	BY	REVISIONS	NO.	DATE	BY	REVISIONS	DESIGNED BY	DRAWN BY	CHECKED BY	SCALE	PROJECT TEAM LEADER	BRIDGE DRAWING	DATE	DRAWING NO.
								C. WILLIAMS	C. WILLIAMS	O. ELTAYEB	1/2" = 1'-0"	B. OTLMANN	6 of 13	MARCH 2026	RG3317-F

ACTUAL FILE: XXXX .DGN
c:\pw-work\d0448686\S.6 MT PRAIRIE 2016(3) - Bent Improvements.DGN [Default]
31 March 2026 3:34 PM

STATE	PROJECT	SHEET NO.
MT	PRAIRIE 2016(3)	S.7

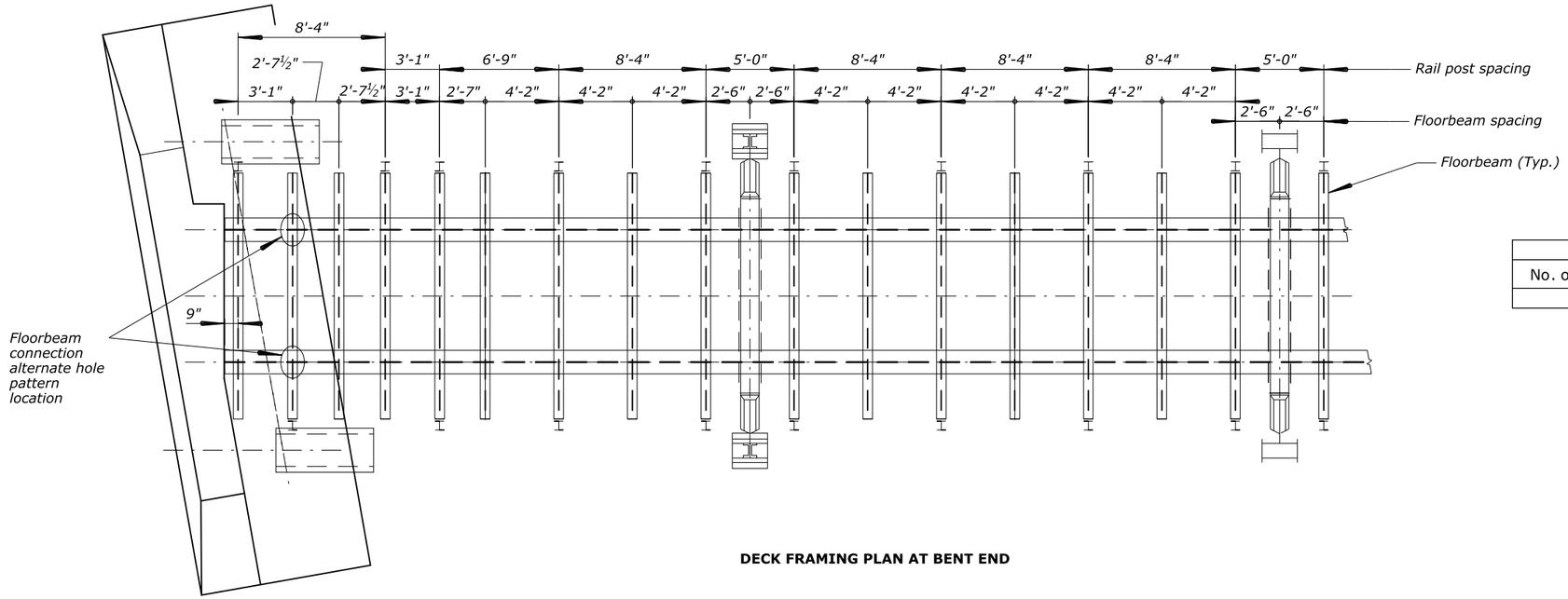

DECK FRAMING PLAN AT BENT END

FLOORBEAM ESTIMATED WEIGHTS		
No. of Floorbeam	Weight Each (LB)	**Total Floorbeam Weight (LB)**
124	369	**45728**

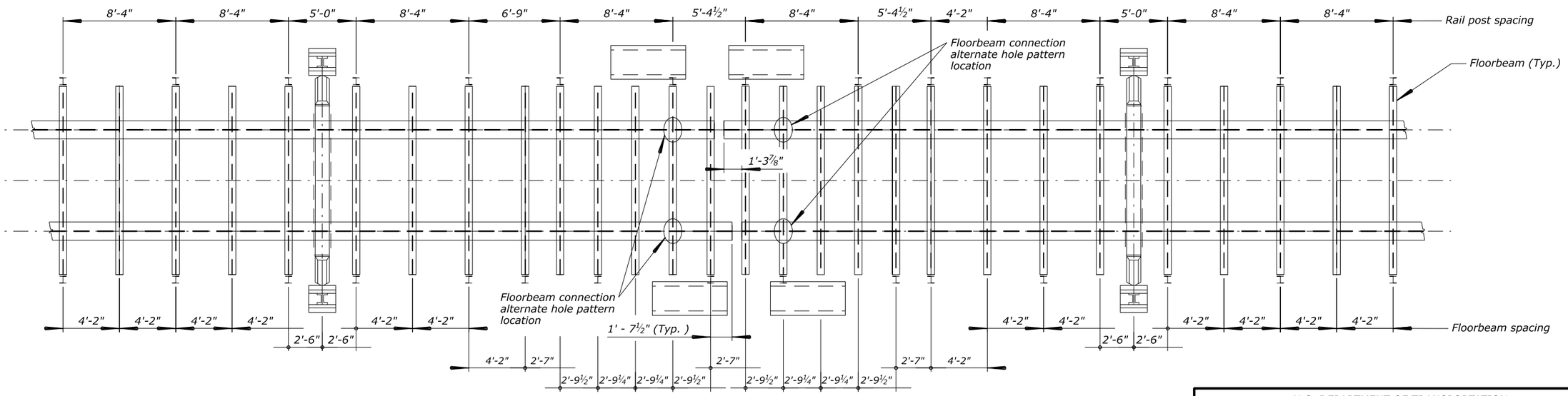

DECK FRAMING PLAN AT PIER

U.S. DEPARTMENT OF TRANSPORTATION
FEDERAL HIGHWAY ADMINISTRATION
WESTERN FEDERAL LANDS HIGHWAY DIVISION

PRAIRIE COUNTY, MT

CALYPSO-MILWAUKEE BRIDGE

DECK FRAMING LAYOUT

NO.	DATE	BY	REVISIONS	NO.	DATE	BY	REVISIONS	DESIGNED BY	DRAWN BY	CHECKED BY	SCALE	PROJECT TEAM LEADER	BRIDGE DRAWING	DATE	DRAWING NO.
								C. WILLIAMS	C. WILLIAMS	O. ELTAYEB	1/4" = 1'-0"	B. OTLMANN	7 of 13	MARCH 2026	RG3317-G

ACTUAL FILE: XXXX .DGN
c:\pw-work\d0448686\S_ MT PRAIRIE 2016(3) - Deck Framing Layout.DGN [Default]
31 March 2026 3:49 PM

STATE	PROJECT	SHEET NO.
MT	PRAIRIE 2016(3)	S.8

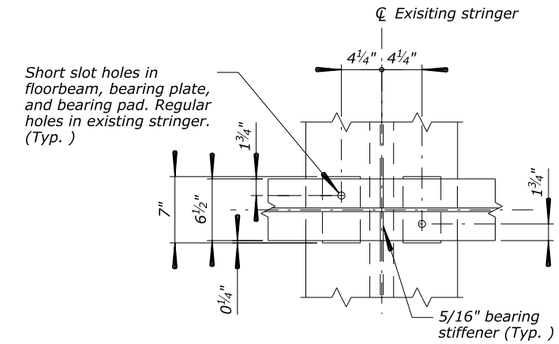

SECTION A-A - STANDARD HOLE PATTERN

1½" = 1'-0"

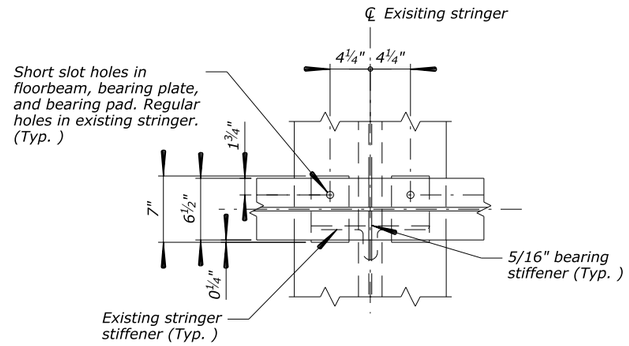

SECTION A-A - ALTERNATE HOLE PATTERN

1½" = 1'-0"

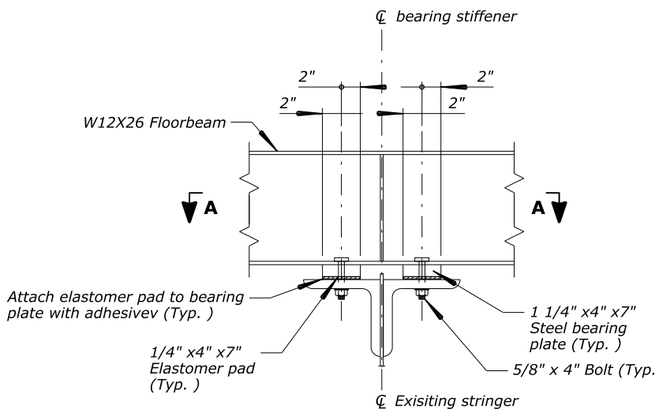

FLOORBEAM CONNECTION DETAIL

1½" = 1'-0"

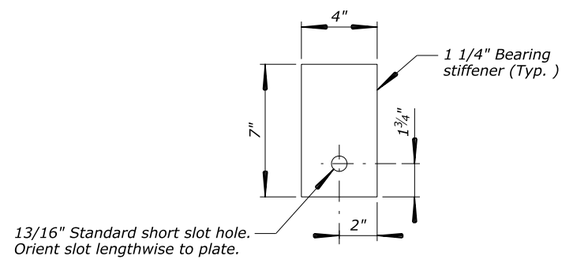

BEARING PLATE

3" = 1'-0"

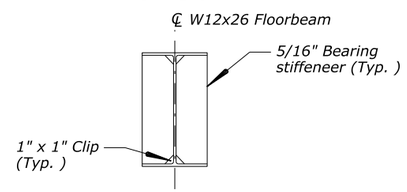

BEARING STIFFENER

1½" = 1'-0"

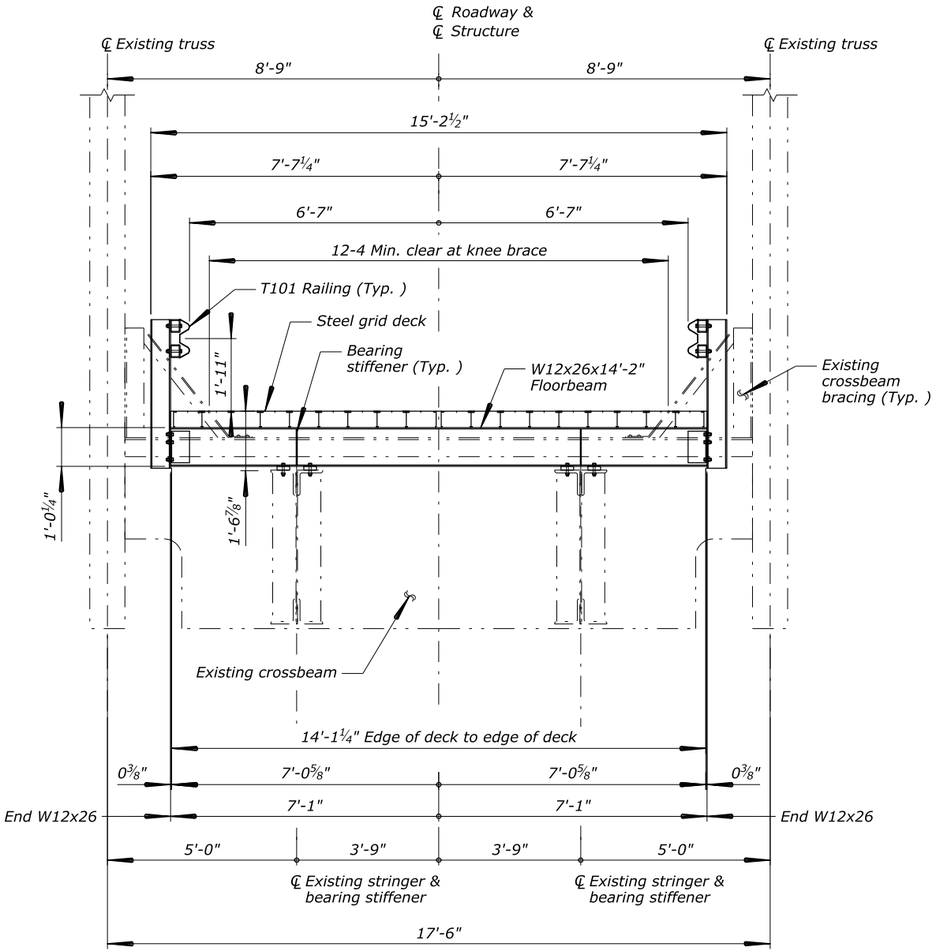

TYPICAL SECTION

½" = 1'-0"

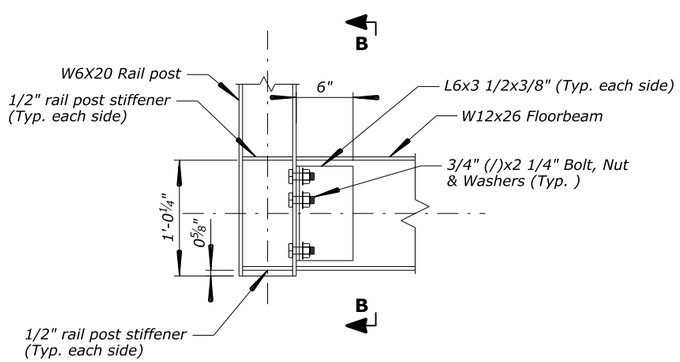

RAIL POST CONNECTION DETAIL

1½" = 1'-0"

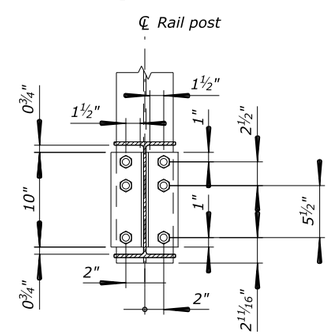

SECTION B-B

1½" = 1'-0"

U.S. DEPARTMENT OF TRANSPORTATION
FEDERAL HIGHWAY ADMINISTRATION
WESTERN FEDERAL LANDS HIGHWAY DIVISION

PRAIRIE COUNTY, MT

CALYPSO-MILWAUKEE BRIDGE

TYPICAL SECTION DETAILS

NO.	DATE	BY	REVISIONS	NO.	DATE	BY	REVISIONS	DESIGNED BY	DRAWN BY	CHECKED BY	SCALE	PROJECT TEAM LEADER	BRIDGE DRAWING	DATE	DRAWING NO.
								C. WILLIAMS	C. WILLIAMS	O. ELTAYEB	AS SHOWN	B. OTLMANN	8 of 13	MARCH 2026	RG3317-H

31 March 2026 5:07 PM c:\pw-work\d0448686\S_ MT PRAIRIE 2016(3) - Typical Section Details.DGN [Default] ACTUAL FILE: XXXX .DGN

STATE	PROJECT	SHEET NO.
MT	PRAIRIE 2016(3)	S.9

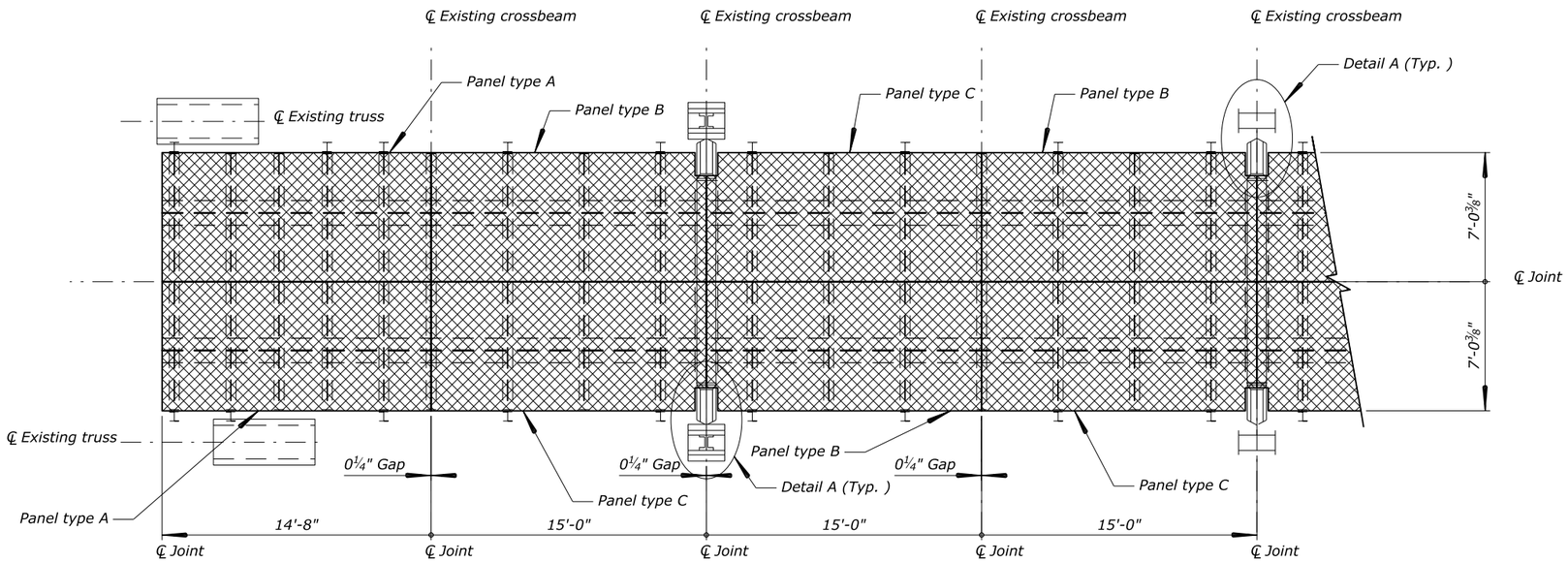

SUGGESTED DECK PANEL LAYOUT AT BENTS
½" = 1'-0"

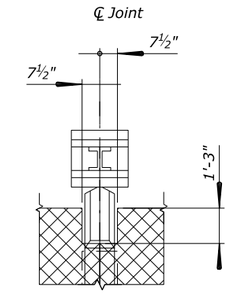

DETAIL A
⅜" = 1'-0"

STEEL GRID DECK ESTIMATED WEIGHTS					
Panel Type	Panel Area (SQFT)	Panel Weight (LB)	Number of Panels	Total Panel Area (SQFT)	Total Panel Weight (LB)
A	103	2063	4	413	8250
B	105	2094	64	6700	134000
C	105	2094	64	6700	134000
D	104	2084	12	1251	25014
Total	**N/A**	**N/A**	**144**	**15063**	**301264**

NOTE: Estimated steel grid deck weight is based on 20 pounds per square foot of deck area. The weight is an estimate only

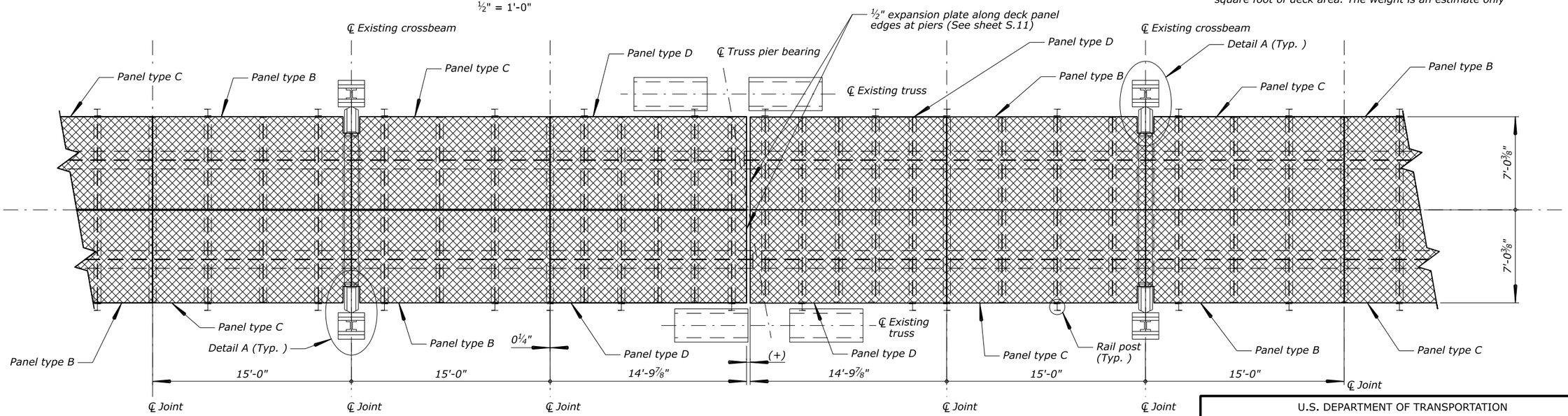

SUGGESTED DECK PANELS AT PIERS
½" = 1'-0"

U.S. DEPARTMENT OF TRANSPORTATION
FEDERAL HIGHWAY ADMINISTRATION
WESTERN FEDERAL LANDS HIGHWAY DIVISION

PRAIRIE COUNTY, MT

CALYPSO-MILWAUKEE BRIDGE

DECK PANEL LAYOUT

NO.	DATE	BY	REVISIONS	NO.	DATE	BY	REVISIONS	DESIGNED BY	DRAWN BY	CHECKED BY	SCALE	PROJECT TEAM LEADER	BRIDGE DRAWING	DATE	DRAWING NO.
								C. WILLIAMS	C. WILLIAMS	O. ELTAYEB	AS SHOWN	B. OTLMANN	9 of 13	MARCH 2026	RG3317-I

ACTUAL FILE: XXXXX .DGN
c:\pw-work\d0448686\S_ MT PRAIRIE 2016(3) - Deck Panel Layout.DGN [Default]
31 March 2026 4:35 PM

STATE	PROJECT	SHEET NO.
MT	PRAIRIE 2016(3)	S.10

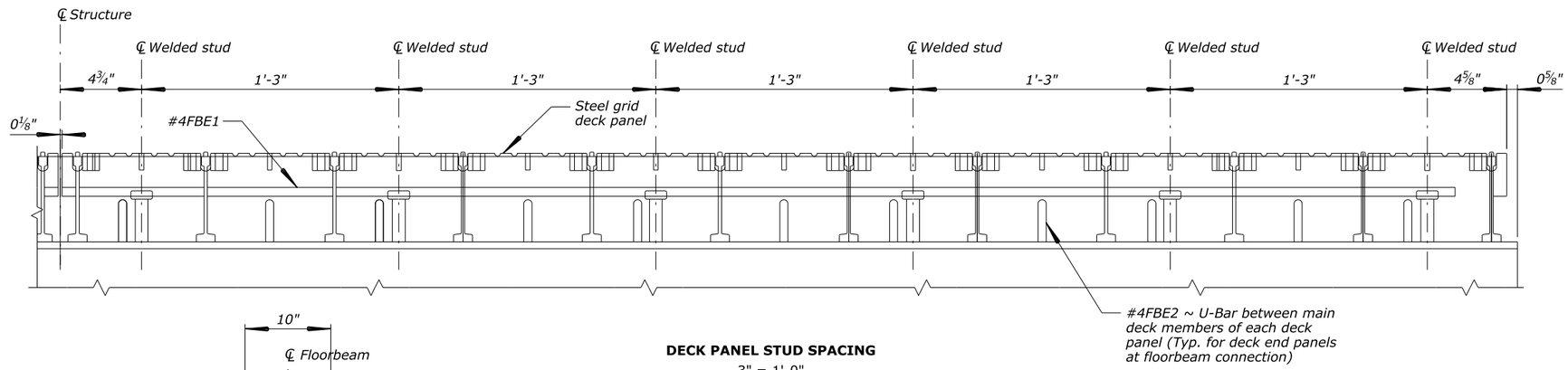

DECK PANEL STUD SPACING
3" = 1'-0"

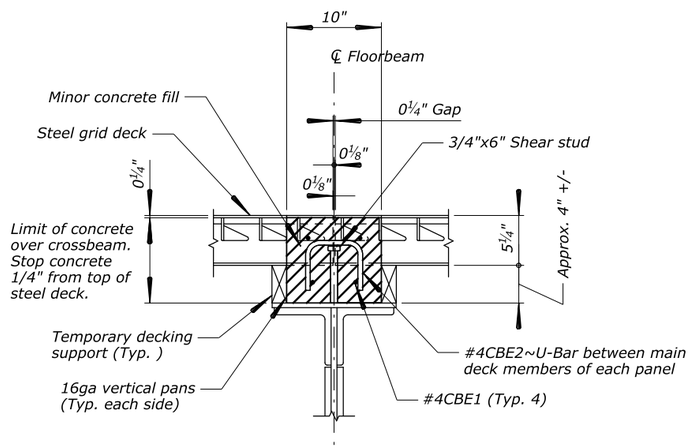

DECK PANEL AT EXISTING CROSSBEAM CONNECTION
1½" = 1'-0"

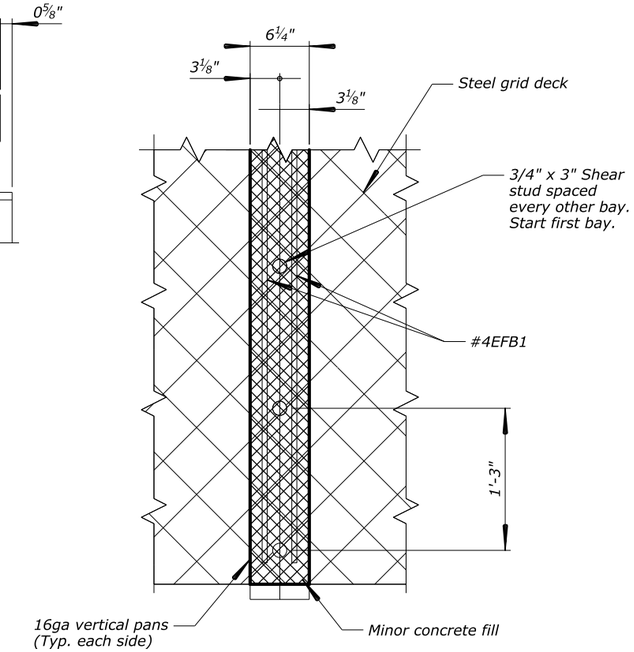

PLAN AT FLOORBEAM CONNECETION
1½" = 1'-0"

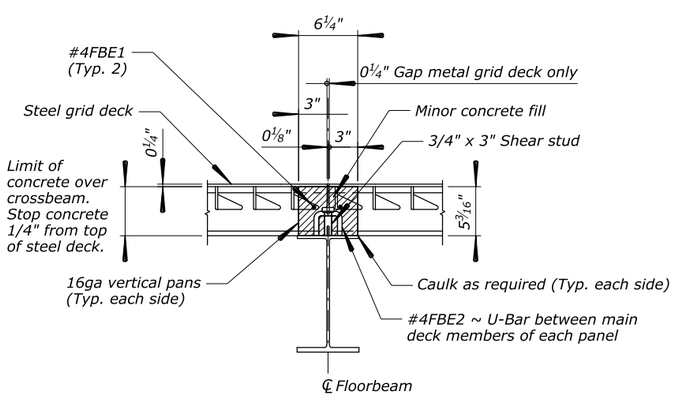

DECK END PANELS AT FLOORBEAM CONNECTION
1½" = 1'-0"

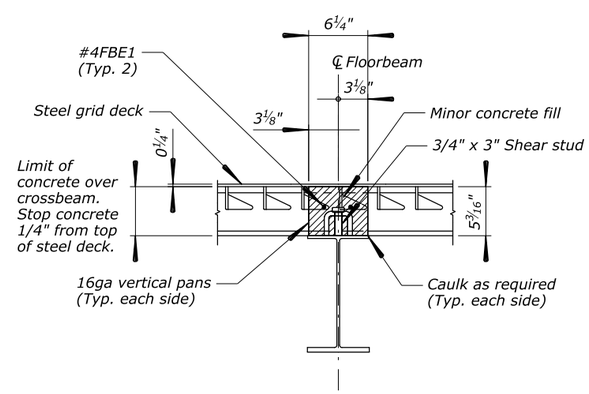

DECK PANEL AT FLOORBEAM CONNECTION
1½" = 1'-0"

REINFORCING STEEL BAR MARK	
BAR MARK	LOCATION
CB	Crossbeam
FB	Floorbeam

U.S. DEPARTMENT OF TRANSPORTATION
FEDERAL HIGHWAY ADMINISTRATION
WESTERN FEDERAL LANDS HIGHWAY DIVISION

PRAIRIE COUNTY, MT

CALYPSO-MILWAUKEE BRIDGE

DECK PANEL STUD SPACING

NO.	DATE	BY	REVISIONS	NO.	DATE	BY	REVISIONS	DESIGNED BY	DRAWN BY	CHECKED BY	SCALE	PROJECT TEAM LEADER	BRIDGE DRAWING	DATE	DRAWING NO.
								C. WILLIAMS	C. WILLIAMS	O. ELTAYEB	AS SHOWN	B. OTLMANN	10 of 13	MARCH 2026	RG3317-J

31 March 2026 4:59 PM c:\pw-work\d0448686\S_ MT PRAIRIE 2016(3) - Deck Panel Stud Spacing.DGN [Default] ACTUAL FILE: XXXX .DGN

STATE	PROJECT	SHEET NO.
MT	PRAIRIE 2016(3)	S.11

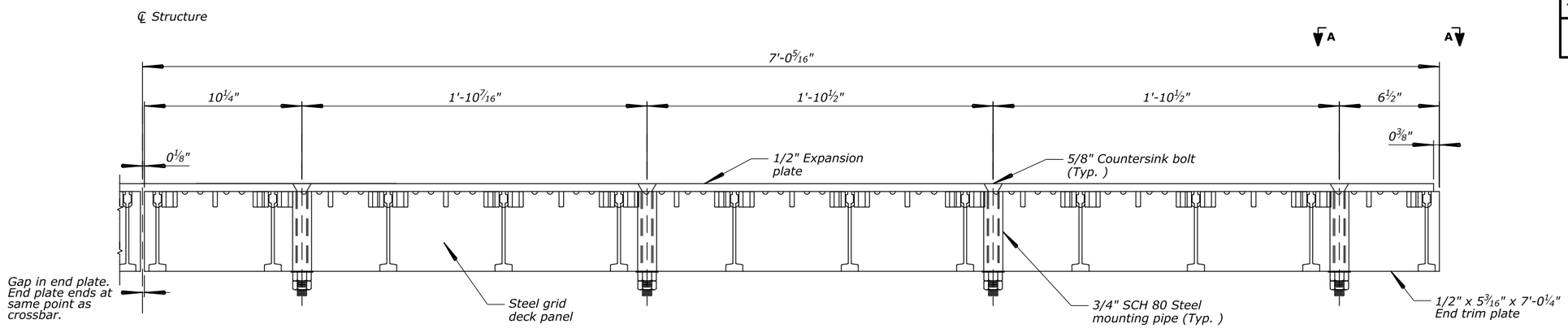

EXPANSION PLATE BOLT SPACING DETAIL
3" = 1'-0"

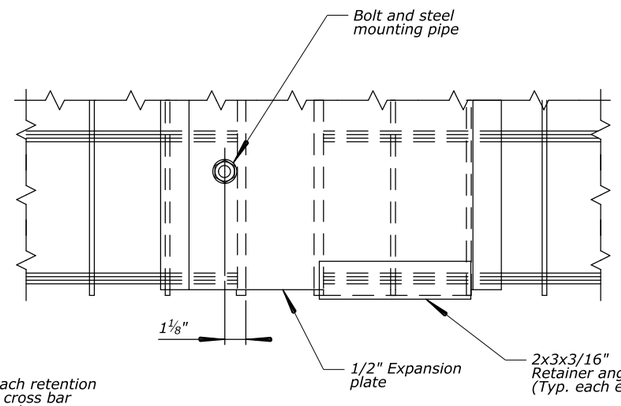

VIEW A-A
3" = 1'-0"

NOTE: Use 1/4" fillet welds to attach retention angle to deck at end plate and at cross bar furthest from the end plate that makes contact with the retention angle. Location of the cross bars may vary from what is shown.

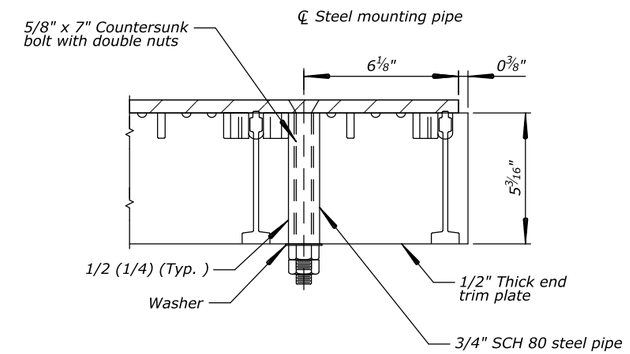

SECTION B-B
4" = 1'-0"

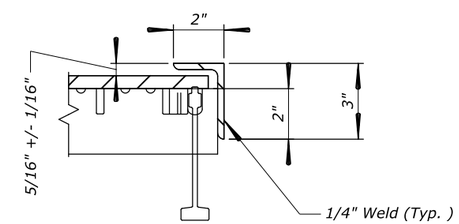

SECTION C-C
4" = 1'-0"

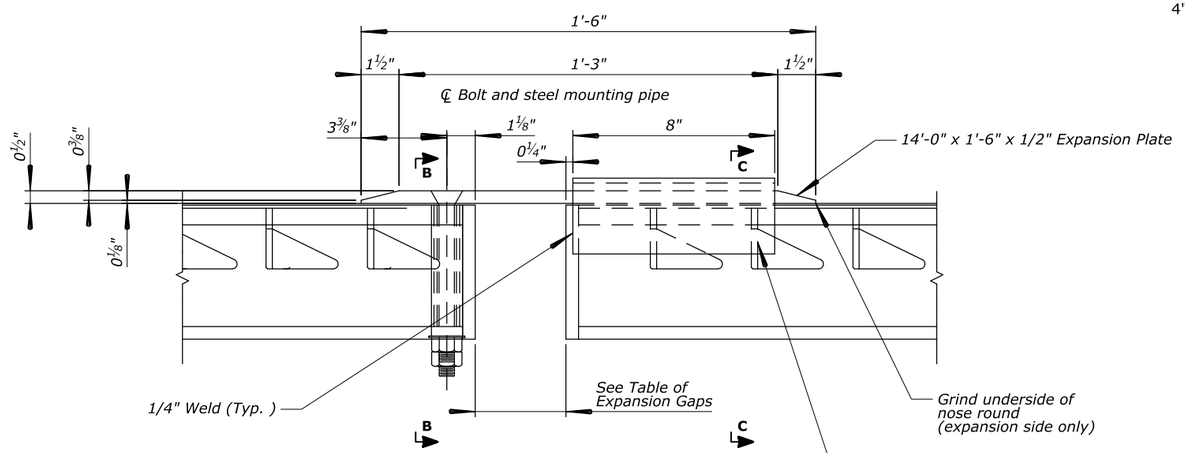

EXPANSION JOINT END VIEW
4" = 1'-0"

TABLE OF EXPANSION GAPS

	TEMPERATURE (°F)						Adjustment for 1/8" movement (°F)	Total Movement (in)
	-40	0	38	60	90	115		
PIER NO. 2	5.125	4.125	3.175	2.625	1.875	1.250	5.0	3.875
PIER NO. 3	5.125	4.125	3.175	2.625	1.875	1.250	5.0	3.875
PIER NO. 4	9.125	7.125	5.225	4.125	2.625	1.375	2.5	7.750

U.S. DEPARTMENT OF TRANSPORTATION
FEDERAL HIGHWAY ADMINISTRATION
WESTERN FEDERAL LANDS HIGHWAY DIVISION

PRAIRIE COUNTY, MT

CALYPSO-MILWAUKEE BRIDGE

EXPANSION BOLT SPACING

NO.	DATE	BY	REVISIONS	NO.	DATE	BY	REVISIONS	DESIGNED BY	DRAWN BY	CHECKED BY	SCALE	PROJECT TEAM LEADER	BRIDGE DRAWING	DATE	DRAWING NO.
								C. WILLIAMS	C. WILLIAMS	O. ELTAYEB	AS SHOWN	B. OTLMANN	11 of 13	MARCH 2026	RG3317-K

31 March 2026 4:49 PM c:\pw-work\d0448686\S._ MT PRAIRIE 2016(3) - Expansion Bolt Spacing.DGN [Default] ACTUAL FILE: XXXX .DGN

STATE	PROJECT	SHEET NO.
MT	PRAIRIE 2016(3)	S.12

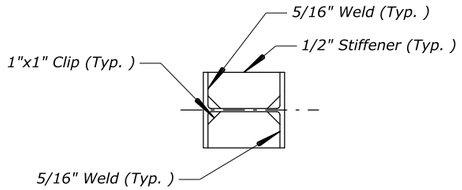

RAIL POST STIFFENER
2" = 1'-0"

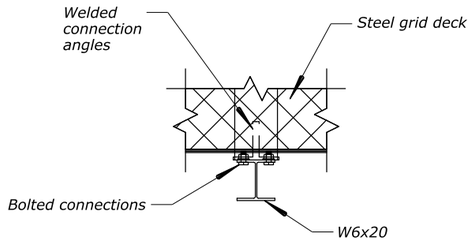

SECTION A
1" = 1'-0"

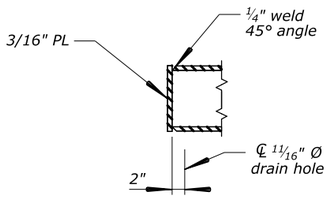

TUBE CAP DETAIL
1" = 1'-0"

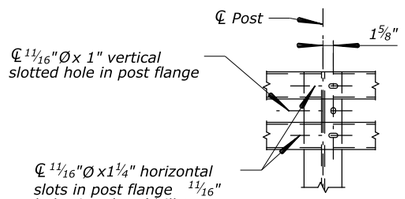

SECTION B
1" = 1'-0"

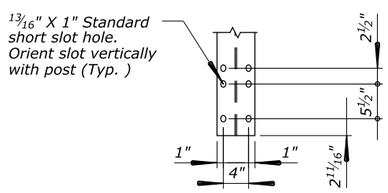

RAIL POST SLOT DETAIL
1" = 1'-0"

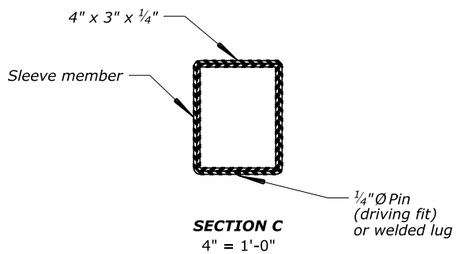

SECTION C
4" = 1'-0"

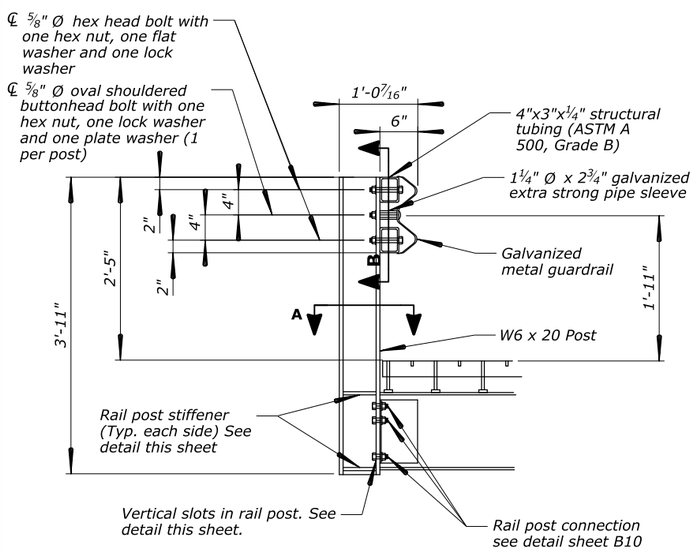

RAIL POST SECTION
1" = 1'-0"

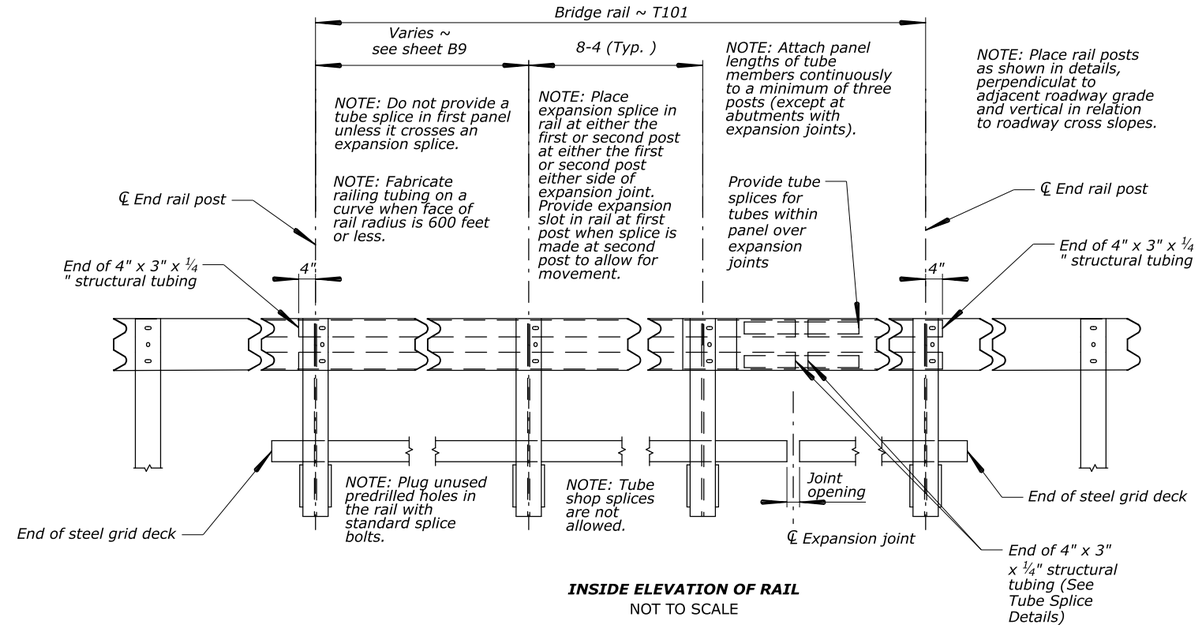

INSIDE ELEVATION OF RAIL
NOT TO SCALE

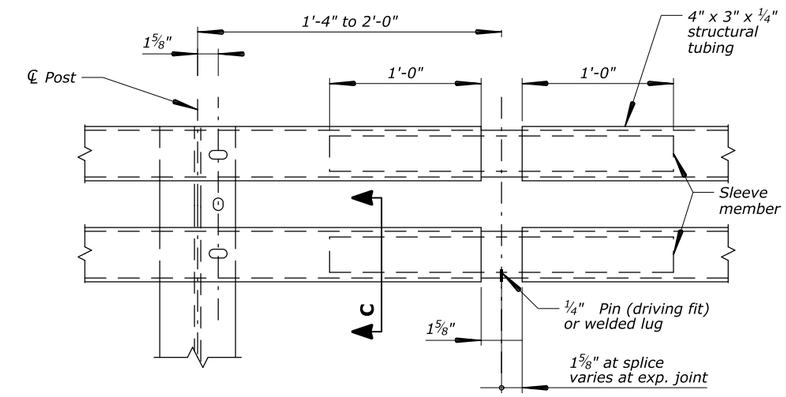

TUBE SPLICE DETAIL
2" = 1'-0"

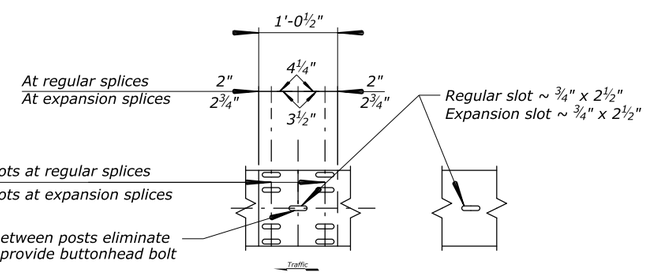

RAIL SPLICE
1" = 1'-0"

POST CONNECTION
1" = 1'-0"

NOTE: At expansion slots in W-beam, tighten bolts snugly.

NOTE: Provide ⅝"Ø oval shouldered buttonhead bolts with hex nuts at all splice slots.

NOTE: Provide a reflector on each end rail poste and at approximately equal spacing (every third rail post but not to exceed 25 feet) between end rail posts. Mount reflectors with reflectorized face toward oncoming traffic, with an approved adhesive

U.S. DEPARTMENT OF TRANSPORTATION
FEDERAL HIGHWAY ADMINISTRATION
WESTERN FEDERAL LANDS HIGHWAY DIVISION

PRAIRIE COUNTY, MT

CALYPSO-MILWAUKEE BRIDGE

RAIL POST DETAILS

NO.	DATE	BY	REVISIONS	NO.	DATE	BY	REVISIONS

DESIGNED BY	DRAWN BY	CHECKED BY	SCALE	PROJECT TEAM LEADER	BRIDGE DRAWING	DATE	DRAWING NO.
C. WILLIAMS	C. WILLIAMS	O. ELTAYEB	AS SHOWN	B. OTLMANN	12 of 13	MARCH 2026	RG3317-L

ACTUAL FILE: XXXXX .DGN
c:\pw-work\d0448686\S_ MT PRAIRIE 2016(3) - Rail Post Details.DGN [Default]
31 March 2026 4:17 PM

STATE	PROJECT	SHEET NO.
MT	PRAIRIE 2016(3)	S.13

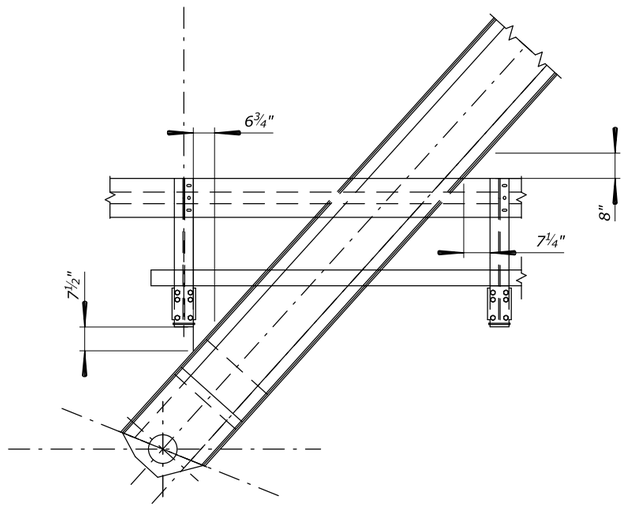

VIEW A

NOTE: This detail shows the intended placement of the T101 rail posts and associated floorbeams relative to the truss diagonal members at the bents.

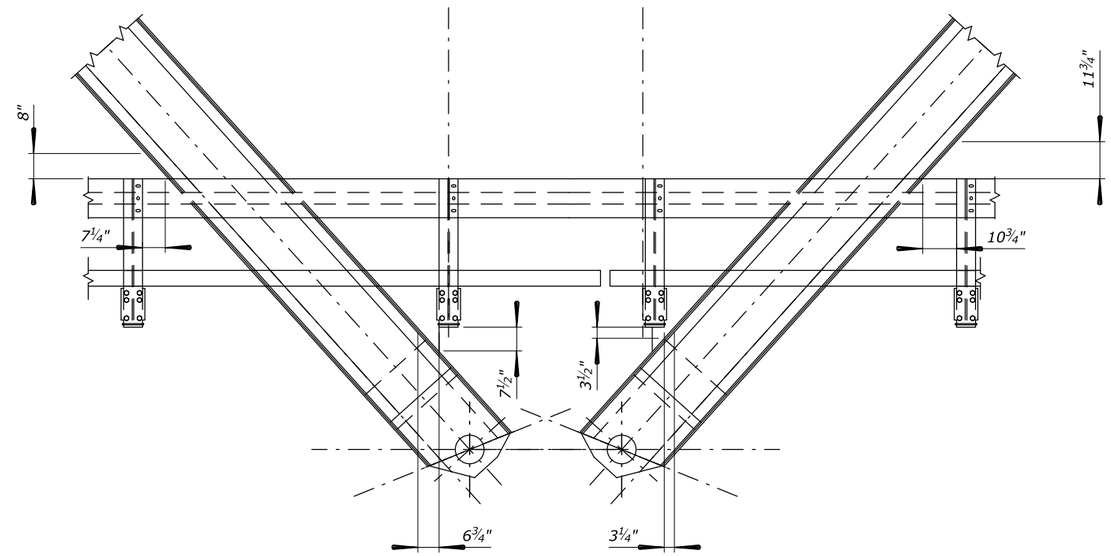

VIEW B

NOTE: This detail shows the intended placement of the T101 rail posts and associated floorbeams relative to the truss diagonal members at the piers.

U.S. DEPARTMENT OF TRANSPORTATION
FEDERAL HIGHWAY ADMINISTRATION
WESTERN FEDERAL LANDS HIGHWAY DIVISION

PRAIRIE COUNTY, MT

CALYPSO-MILWAUKEE BRIDGE

RAIL POST CLEARANCE DETAILS

NO.	DATE	BY	REVISIONS	NO.	DATE	BY	REVISIONS	DESIGNED BY	DRAWN BY	CHECKED BY	SCALE	PROJECT TEAM LEADER	BRIDGE DRAWING	DATE	DRAWING NO.
								C. WILLIAMS	C. WILLIAMS	O. ELTAYEB	1/2" = 1'-0"	B. OTLMANN	13 of 13	MARCH 2026	RG3317-M

31 March 2026 4:57 PM c:\pw-work\d0448686\S_ MT PRAIRIE 2016(3) - Rail Post Clearance Details.DGN [Default] ACTUAL FILE: XXXX .DGN