MECHANICAL LEGEND

SYMBOL	ABBREVIATION	DESCRIPTION
ABC		ABOVE CEILING
BTU(H)		BRITISH THERMAL UNITS (PER HOUR)
CEF		CEILING EXHAUST FAN
CD		CONDENSATE DRAIN
CONN.		CONNECT OR CONNECTION
CONT.		CONTINUATION
	CFM	CUBIC FEET OF AIR FLOW PER MINUTE
1 CP		CHILLER PUMP
CTE		CONNECT TO EXISTING
DB		DRY BULB (DEGREES FAHRENHEIT)
	DIA.	DIAMETER , PHASE
EDB		ENTERING DRY BULB
EWT		ENTERING WATER TEMPERATURE
EWB		ENTERING WET BULB
EA		EXHAUST AIR
EAD		EXHAUST AIR DAMPER
EF		EXHAUST FAN
(E), EXIST.		EXISTING
ESP		EXTERNAL STATIC PRESSURE
°F		DEGREES FAHRENHEIT
FC		FLEXIBLE CONNECTION
FLA		FULL LOAD AMPS
F.O.		FLAT OVAL
GPH		GALLONS PER HOUR
GPM		GALLONS PER MINUTE
GALV.		GALVANIZED
G.I.		GALVANIZED IRON
GA.		GAUGE
HTG		HEATING
LBS		POUNDS
LDB		LEAVING DRY BULB IN DEGREES FAHRENHEIT
LWB		LEAVING WET BULB IN DEGREES FAHRENHEIT
LRA		LOCKED ROTOR AMPERES
MAD, MD		MANUAL AIR DAMPER
MAX.		MAXIMUM
MBH		THOUSAND BRITISH THERMAL UNITS PER HOUR
MIN.		MINIMUM
(N)		NEW
OA		OUTSIDE AIR
OAD		OUTSIDE AIR DAMPER
	POC	POINT OF CONNECTION
RA		RETURN AIR
RAD		RETURN AIR DAMPER
RLA		RUNNING LOAD AMPERES
	SQFT	SQUARE FEET
SA		SUPPLY AIR
SFDR		COMBINATION SMOKE/FIRE DAMPER
1 TU		TERMINAL UNIT
TYP.		TYPICAL
UCD		UNDER CUT DOOR
1 VFD		VARIABLE FREQUENCY DRIVE
WT.		WEIGHT
	MAD , MD	
Ⓣx	T	THERMOSTAT, "X" INDICATES DEVICE CONTROLLED
—— CWS ——	CWS	CONDENSER WATER SUPPLY PIPING
—— CWR ——	CWR	CONDENSER WATER RETURN PIPING
—— CHWS ——	CHWS	CHILLED WATER SUPPLY PIPING
—— CHWR ——	CHWR	CHILLED WATER RETURN PIPING
—— CD ——	CD, D	CONDENSATE DRAIN , DRAIN
—— HHWS ——	HHWS	HEATING HOT WATER SUPPLY PIPING
—— HHWR ——	HHWR	HEATING HOT WATER RETURN PIPING

MECHANICAL LEGEND

SYMBOL	DESCRIPTION
AC	AIR CONDITIONING
CFM	CUBIC FEET OF AIR FLOW PER MINUTE
DB	DRY BULB IN DEGREES FAHRENHEIT
DIA., ø	DIAMETER
(E), EXIST.	EXISTING TO BE FIELD VERIFIED BY CONTRACTOR
°F	DEGREES FAHRENHEIT
MBH	THOUSAND BRITISH THERMAL UNITS PER HOUR
SP	STATIC PRESSURE
TCP	TEMPERATURE CONTROL PANEL
——, MAD	MANUAL AIR DAMPER
Ⓣ	THERMOSTAT
, ,	RETURN AND OUTSIDE AIR DUCT, SUPPLY AIR DUCT, EXHAUST AIR DUCT
, ,	RETURN AND OUTSIDE AIR DUCT, SUPPLY AIR DUCT, EXHAUST AIR DUCT (IN SECTION)
——, SA	FLOW DIRECTION, SUPPLY AIR
——, RA	FLOW DIRECTION, RETURN AIR OR OUTSIDE AIR
——, EA	FLOW DIRECTION, EXHAUST AIR OR RELIEF AIR

DUCT LEGEND

SYMBOL	DESCRIPTION
24x12 / 24x12	DUCT – WIDTH x DEPTH
18"ø / 18"ø	ROUND DUCT
	FLEXIBLE DUCT
	45 DEGREE FITTING AT ALL SUPPLY BRANCH TAKE-OFFS ROUND DUCTS
	FLEX DUCT OR ROUND DUCT
	SPIN-IN DAMPER AND EXTRACTOR AT ALL ROUND TO RECTANGULAR DUCT TAKE-OFFS.
	MAD. MANUAL AIR DAMPER
	TRANSITION
	TURNING VANES ON ALL SUPPLY & RETURN DUCTS.
	MAD IN DROP TO RETURN GRILLE
	TURNING VANES
	DIFFUSER
	45 DEGREE FITTING
	DIFFUSER
24x12	RECTANGULAR DUCTWORK WITH INTERNAL INSULATION, DIMENSIONS SHOWN ARE NET INSIDE DIMENSIONS.

CERTIFICATION OF BUILDING ENERGY PERFORMANCE

LOCATION: MATHER, CA.

PROJECT TITLE: AIR HANDLER REPLACEMENT

PROJECT NO.:

PROJECT MANAGER:

I CERTIFY THAT THE ENERGY PERFORMANCE OF THE ABOVE PROJECT FULLY SATISFIES THE ENERGY EFFICIENT REQUIREMENTS OF THE DOE REGULATIONS, 10 CFR PART 435, "ENERGY CONSERVATION VOLUNTARY PERFORMANCE STANDARDS FOR COMMERCIAL AND MULTI~FAMILY HIGH RISE RESIDENTIAL BUILDINGS; MANDATORY FOR NEW FEDERAL BUILDINGS, INTERIM RULE" WITH THE EXCEPTION OF SPECIAL REQUIREMENTS LISTED IN THE VA HVAC DESIGN MANUAL FOR HOSPITAL PROJECTS DATED JUNE 2006.

NAME & TITLE: KENT LAWS, ENGINEER

TITLE/POSITION: ENGINEER

PROFESSIONAL REGISTRATION NO.: M26762

STATE WHERE REGISTERED (USE SEAL):

CONSTRUCTION PHASING NOTES

1. THE SCOPE OF THIS PROJECT INVOLVES AREAS OF AN OPERATIONAL MEDICAL CENTER. THEREFORE THE CONTRACTOR SHALL AT NO TIME INTERUPT UTILITIES (SUCH AS HVAC, ELECTRICAL, PLUMBING, ETC.) WITHOUT PRIOR WRITTEN AUTHORIZATION FROM THE CONTRACTING OFFICER.
2. THE CONTRACTOR SHALL PROVIDE ALL NECESSARY TEMPORARY UTILITIES INCLUDING, BUT NOT LIMITED TO, ELECTRICAL SERVICES, AND HEATING, VENTILATING AND AIR CONDITIONING SYSTEMS AS REQUIRED TO MEET THE MINIMUM SETPOINT TEMPERATURES REQUIRED BY THE VA AND THESE DOCUMENTS. CONTRACTOR MAY CONNECT TO EXISTING HEATING HOT WATER, CHILLED WATER AND ELECTRICAL POWER, IF APPROVED BY THE CONTRACTING OFFICER. CONTRACTOR MUST VERIFY POINTS OF CONNECTION PRIOR TO INTERRUPTION OF UTILITIES. CONTRACTOR SHALL PROVIDE ALL REQUIRED AIR HANDLING EQUIPMENT, DUCTWORK, PIPING AND CONTROLS AS NECESSARY TO MAINTAIN THE ENVIRONMENTAL CONDITIONS IN THE PROJECT AREA.
3. THE CONTRACTOR WILL COORDINATE CLOSELY WITH THE VA FACILITIES MANAGEMENT TO DETERMINE THE OPTIMAL TIME FOR SHUT-DOWNS AND SYSTEM SWITCH-OVER.

SEISMIC BRACING AND ANCHORAGE NOTES

1. CONTRACTOR SHALL INSTALL ALL MECHANICAL SYSTEMS AND EQUIPMENT SO AS TO COMPLY WITH CHAPTER 23 AND RELATED CHAPTERS OF THE 2001 UNIFORM BUILDING CODE (UBC) WITH ACCUMULATIVE SUPPLEMENTS, WITH EXCEPTIONS (WHERE NOTED). CONTRACTOR SHALL SUBMIT CALCULATIONS AND DETAILS PREPARED BY A LICENSED REGISTERED PROFESSIONAL STRUCTURAL ENGINEER DEMONSTRATING COMPLIANCE WITH THE ABOVE REFERENCED CODE. ALL CALCULATIONS AND DETAILS SHALL BE REVIEWED AND APPROVED BY THE RESIDENT ENGINEER PRIOR TO INSTALLATION BY THE CONTRACTOR.
2. THE CONTRACTOR SHALL USE THE FOLLOWING VALUES IN EQUATION 36-1 OF SECTION 2336 OF THE ABOVE CODE;
   Z=0.40
   I~P'=1.50
   C~P'=0.75 (MINIMUM)
3. MECHANICAL SYSTEMS INCLUDE, BUT ARE NOT LIMITED TO; PIPING, CONDUIT, DUCTWORK AND COMPONENTS.
4. EQUIPMENT INCLUDES, BUT IS NOT LIMITED TO; PANELS, PUMPS, WATER HEATERS, TANKS, VESSELS, AIR HANDLING UNITS, FANS AND COMPONENTS.
5. PIPING INCLUDES HVAC AND PLUMBING PIPING AND COMPONENTS.
6. FOOTNOTE 8 OF TABLE 23-P OF THE ABOVE REFERENCED CODE SHALL BE AMENDED TO READ AS FOLLOWS; MACHINERY AND EQUIPMENT INCLUDE, BUT ARE NOT LIMITED TO, BOILERS, CHILLERS, HEAT EXCHANGERS, PUMPS, AIR-HANDLING UNITS, COOLING TOWERS, CONTROL PANELS, MOTORS, SWITCH-GEAR, TRANSFORMERS AND LIFE-SAFETY EQUIPMENT. IT SHALL INCLUDE ALL CONDUIT, DUCTING AND PIPING SERVING SUCH MACHINERY AND EQUIPMENT AND FIRE SPRINKLER SYSTEMS. SEE SECTION 2336(b) FOR ADDITIONAL REQUIREMENTS FOR DETERMINING C~P' FOR NONRIGID OR FLEXIBLY MOUNTED EQUIPMENT.
7. ALL PIPE AND DUCT RUNS SHALL HAVE A MINIMUM OF TWO TRANSVERSE BRACES AND ONE LONGITUDINAL BRACE.
8. PIPING SYSTEM SEISMIC BRACING DESIGN SHALL INCLUDE AND TAKE INTO ACCOUNT PIPE MATERIAL AND JOINING METHODS AND VIBRATION ISOLATION DEVICES.
9. SEE SPECIFICATION SECTION DIVISION 23 AND STRUCTURAL DRAWINGS AND SPECIFICATIONS.

K.F. DAVIS ENGINEERING, INC
530 LA GONDA WAY, SUITE E
DANVILLE, CA 94526

Revisions: 1 DATED 11/10/08; 2 DATED 11/19/08; 3 DATED 07/14/09; 4 DATED 12/05/2011	Drawing Title: GENERAL NOTES, LEGEND AND ABBREVIATIONS	Project Title: BLDG 650 REPLACE AIR HANDLERS 1 THRU 4, 7 AND 9 – 15	Date: 12/05/11
			Project No.: 612A4-07-342
Approved:	Approved: Medical Center Director	Drawn: RMK	Building Number:
Approved:	Approved: Chief, Engineering Service	Checked: KL	Location: MATHER VAMC MATHER CALIFORNIA
			DRAWING No. H1.1 Dwg. Of

Department of Veterans Affairs

SCALE: 1/8"=1'-0" 1/4"=1'-0" 1/2"=1'-0" 3/4"=1'-0"

111008

GENERAL NOTES:

1. ALL DRAWINGS ARE CONSIDERED TO BE PART OF THE CONTRACT DOCUMENTS.
2. ANY WORK THAT HAS BEEN PERFORMED IN CONFLICT WITH THE CONTRACT DOCUMENTS OR CODE REQUIREMENTS SHALL BE CORRECTED BY THE CONTRACTOR AT THEIR OWN EXPENSE, WITHOUT ANY EXPENSE TO THE GOVERNMENT.
3. IT IS THE INTENT OF THESE DOCUMENTS THAT A COMPLETE AND WORKABLE INSTALLATION BE PROVIDED. THE CONTRACTOR SHALL FURNISH ALL LABOR, MATERIALS, EQUIPMENT, TOOLS, SUPERVISION, TRANSPORTATION, WAREHOUSING AND OTHER SERVICES REQUIRED TO COMPLETE THE WORK IN AN EFFICIENT AND TIMELY MANNER.
4. ALL WORK, INCLUDING MATERIALS AND WORKMANSHIP, SHALL CONFORM TO THE REQUIREMENTS OF ALL STATE CODES, LAWS AND ORDINANCES AND THE LATEST EDITIONS OF THE NEC, CALIFORNIA MECHANICAL, PLUMBING AND BUILDING CODES INCLUDING LOCAL AMENDMENTS. WORK SHALL BE COMPLETE IN ALL RESPECTS AND IN ACCORDANCE WITH THE BEST ESTABLISHED AND ACCEPTED CONSTRUCTION PRACTICES AND STANDARDS.
5. PIPE HANGERS AND DEVICES SHALL BE UL LISTED AND FM APPROVED AND COMPLY WITH ALL APPLICABLE STANDARDS.
6. ALL EQUIPMENT, PIPING AND ALL RELATED EQUIPMENT SHALL BE ANCHORED, MOUNTED, BRACED AND SUPPORTED PER THE SMACNA 1997 SEISMIC RESTRAINT MANUAL, "GUIDELINES FOR MECHANICAL SYSTEMS", AND THE LATEST EDITION OF THE CALIFORNIA BUILDING CODE AND THE CALIFORNIA MECHANICAL CODE. PROVIDE ALL LABOR, MATERIALS AND EQUIPMENT TO FURNISH AND INSTALL COMPLETE SUPPORT, ANCHORAGE AND SEISMIC RESTRAINT SYSTEMS FOR PIPING, DUCTWORK AND REHEAT COILS IN CONFORMITY WITH APPLICABLE CODES AND AUTHORITIES HAVING JURISDICTION.
7. ALL MISCELLANEOUS IRON, STEEL AND CONCRETE WORK REQUIRED TO PROPERLY INSTALL THE DUCTWORK, PIPING AND EQUIPMENT SHALL BE FURNISHED AND INSTALLED BY THE CONTRACTOR. WORK INCLUDES ALL HANGERS, SUPPORTS, RACKS, BRACKETS, ANCHORS, GUIDES, AND ANY WELDING REQUIRED.
8. CONTRACTOR SHALL FURNISH, INSTALL/ERECT AND MAINTAIN FOR THE DURATION OF HIS WORK, ALL GUARDRAILS, LIGHTS, WARNING SIGNS, STAGING, VENTILATION, ETC. REQUIRED BY LOCAL AND STATE LAWS AND ORDINANCES, INCLUDING THE SAFETY REGULATIONS OF OSHA.
9. CONTRACTOR SHALL COMPLY WITH ALL CONTRACT DOCUMENTS IN LAYING OUT HIS WORK AND EQUIPMENT. HE SHALL COORDINATE HIS WORK WITH THE WORK OF OTHER TRADES AND ALL JOB CONDITIONS.
10. CONTRACTOR IS RESPONSIBLE TO REVIEW AND COORDINATE THEIR WORK, BASED ON THE DRAWINGS AND SPECIFICATIONS, PRIOR TO THE START OF CONSTRUCTION. NO ADDITIONAL ALLOWANCE WILL BE SUBSEQUENTLY MADE BECAUSE OF ERRORS, AMBIGUITIES, OR OMISSIONS WHICH REASONABLY COULD HAVE BEEN DISCOVERED DURING THE PREPARATION OF THE BID.
11. VERIFY AND COORDINATE THE EXACT ROUTING AND SIZE OF DUCTWORK AND LOCATIONS OF ALL EQUIPMENT, FIRE SPRINKLER HEADS, DIFFUSERS, REGISTERS AND GRILLES. COORDINATE LOCATIONS OF SUPPORT RODS AND SYSTEMS INCLUDING ARCHITECTURAL ITEMS AND LIGHT FIXTURE SUPPORT RODS. ~~SEE REFLECTED CEILING PLANS~~. NOTIFY CONTRACTING OFFICER IMMEDIATELY OF ANY DISCREPANCIES BETWEEN (E) SYSTEMS AND DRAWINGS. (1)
12. COORDINATE EXACT LOCATION OF EQUIPMENT AND ALL PENETRATIONS THROUGH ROOF, FLOORS AND WALLS WITH ARCHITECTURAL AND STRUCTURAL SYSTEMS PRIOR TO COMMENCING WORK. VERIFY LOCATIONS WITH CO AND/OR COTR.
13. ALL MATERIALS INCLUDING DUCTWORK, CEILING DIFFUSERS/REGISTERS/GRILLES, EQUIPMENT, PIPING ETC., ARE NEW UNLESS OTHERWISE NOTED.
14. ALL NEW EQUIPMENT SHALL BE AS SPECIFIED AND INSTALLED IN STRICT ACCORDANCE WITH MANUFACTURER'S WRITTEN INSTRUCTIONS AND TO THE INDUSTRY STANDARDS FOR THE WORK, UNLESS A HIGHER STANDARD IS SPECIFIED IN THE DOCUMENTS.
15. ACCESS AND WORKING SPACE SHALL BE PROVIDED AND MAINTAINED AROUND ALL MECHANICAL, ELECTRICAL, CONTROL EQUIPMENT PER THE LATEST EDITION OF THE MECHANICAL, ELECTRICAL AND BUILDING CODES TO PERMIT READY AND SAFE OPERATION, EXAMINATION AND MAINTENANCE.
16. PATCH AND PAINT ALL HOLES THROUGH WALLS TO MATCH ADJACENT SURFACES.
17. CONTRACTOR SHALL COORDINATE WITH OWNER ALL SHUT-DOWNS OF SERVICES REQUIRED TO PERFORM WORK PRIOR TO SHUTDOWN. ALL SHUTDOWNS SHALL BE SCHEDULED AT THE CONVENIENCE OF THE OWNER AND SHALL FOLLOW LOCK OUT/TAG OUT PROCEDURES SPECIFIED BY OWNER.
18. SCHEDULE SHUTDOWN OF CENTRAL AIR HANDLING UNITS. SHUTDOWN SHALL OCCUR AS DICTATED BY THE CO AND/OR COTR.
19. ALL WORK SHOWN SHALL BE PROVIDED UNDER THIS CONTRACT, UNLESS NOTED OTHERWISE. MATERIAL AND EQUIPMENT NOTED AS OFCI SHALL BE OWNER FURNISHED, CONTRACTOR INSTALLED. MATERIAL AND EQUIPMENT NOTED AS OFOI SHALL BE OWNER FURNISHED AND OWNER INSTALLED.
20. CONTRACTOR SHALL FIELD VERIFY LAYOUT AND INSTALLATION REQUIREMENTS FOR ACTUAL EQUIPMENT PROVIDED. ACCESS INTO THE BASEMENT MECHANICAL ROOM SHALL BE COORDINATED WITH EQUIPMENT MANUFACTURERS.
21. ALL ELEVATIONS NOTED ARE RELATIVE TO FINISHED FLOOR ELEVATIONS.
22. NOTES SHOWN ON INDIVIDUAL SHEETS ARE DESIGNATED WITH A CIRCLE SURROUNDING THE NOTE NUMBER (SHEET NOTE) OR WITHOUT THE CIRCLE (GENERAL NOTE). WITH THE CIRCLE, THE NOTE APPLIES TO A SPECIFIC LOCATION ON THE SHEET AND WITHOUT THE CIRCLE, THE NOTE APPLIES TO THE ENTIRE SHEET.
23. NO PIPING SHALL BE INSTALLED ABOVE ELECTRICAL EQUIPMENT, UNLESS OTHERWISE NOTED.
24. CONTRACTOR SHALL (1) SURVEY ALL EXISTING AREA SEPARATION PARTITIONS AND OCCUPANCY SEPARATION PARTITIONS, AND (2) SHALL LOCATE PIPE, DUCT, AND ELECTRICAL CONDUITS AND OTHER FIRESTOP SYSTEM FOR THE SEPARATION AND FIRE RATING OF THE PARTITION. FOR LOCATIONS THAT REQUIRE MODIFICATIONS TO ACHIEVE THE REQUIRED SEPARATION AND FIRE RATING. CONTRACTOR SHALL FILL, APPLY AND OTHERWISE INSTALL THE NECESSARY APPROVED SPECIFIED THROUGH-PENETRATION FIRESTOP.
25. PENETRATIONS OF RATED ASSEMBLIES SHALL BE FIRE STOPPED. FIRE STOPPING SHALL BE OF APPROVED MATERIAL.
26. ALL PIPING AND DUCTS IN FINISHED ROOMS OR SPACES SHALL BE CONCEALED IN A FURRED CHASE OR ABOVE THE SUSPENDED CEILING.
27. CONTRACTOR SHALL MODIFY EXISTING CONSTRUCTION AS REQUIRED TO PROVIDE ACCESS FOR INSTALLATION AND MAINTENANCE OF THE NEW VARIABLE AIR VOLUME TERMINAL UNITS AND NEW AIR HANDLING UNITS.
28. TESTING, ADJUSTING AND BALANCING: SEE SPECIFICATION SECTION 15980. CONTRACTOR SHALL ADJUST CEILING DIFFUSERS AIR FLOW RATE TO QUANTITIES SHOWN.
29. CONTRACTOR SHALL PROTECT PIPING AND DUCTWORK AND SHALL RELOCATE CONCEALED MECHANICAL AND ELECTRICAL WORK, THAT IS REQUIRED TO PRESERVE THE SERVICE TO OTHER AREAS. NOTIFY CO AND/OR COTR BEFORE DISRUPTING THE DUCTWORK OR PIPING.
30. REINSULATE EXISTING PIPING AND DUCTWORK WHERE INSULATION WAS REMOVED OR DAMAGED AS A RESULT OF WORK UNDER THIS PROJECT.
31. CONTRACTOR SHALL TAKE PRECAUTIONS NOT TO DAMAGE ALL WORK TO REMAIN INCLUDING STRUCTURAL WORK INTENDED TO REMAIN. PROVIDE CAREFUL, SELECTIVE CUTTING AND REMOVAL OF EXISTING CONSTRUCTION AS REQUIRED TO PERMIT RELOCATION OR MODIFICATION OF EXISTING MECHANICAL AND ELECTRICAL SYSTEMS.
32. CONTRACTOR SHALL REPAIR DAMAGED WORK WITH MATERIALS, WORKMANSHIP AND FINISHES MATCHING EXISTING WORK WITH NEW.
33. CONTRACTOR SHALL PROVIDE MANUAL BALANCING DAMPERS AT ALL BRANCH TAKE-OFFS TO DIFFUSERS AND GRILLES. WHERE MULTIPLE DIFFUSERS, OR GRILLES HAVE COMMON AIR TERMINALS, PROVIDE MANUAL BALANCING DAMPER IN BRANCH DUCT TO EACH DIFFUSER AND GRILLE. INSTALL DAMPER AS CLOSE TO TAKE-OFFS AS POSSIBLE.
34. DUCT SIZE UPSTREAM WITHIN 3 FEET OF AIR TERMINALS SHALL BE STRAIGHT AND THE SAME SIZE AS THE INLET DIMENSION UNLESS OTHERWISE NOTED.
35. DUCT SIZES DENOTE INSIDE DIMENSIONS UNLESS OTHERWISE INDICATED. THE FIRST FIGURE OF DUCT SIZE INDICATES DIMENSION OF FACE SHOWN OR INDICATED.
36. DIFFUSER, REGISTER AND GRILLE SIZES SHOWN ON FLOOR PLAN ARE NECK SIZES. DUCT SIZE TO DIFFUSERS AND GRILLES SHALL BE THE SAME AS NECK SIZE FOR DIFFUSER AND AS GRILLE CONNECTION SIZE FOR GRILLES, UNLESS OTHERWISE NOTED.
37. WHERE INLET DUCT DIAMETER AND DIFFUSER NECK SIZE ARE THE SAME (I.E. 9"ø & 9 X 9) CONTRACTOR SHALL OVERSIZE THE SHEET METAL PLENUM TO ACCOMODATE THE ROUND DUCT CONNECTION.
38. SUPPLY AIR TERMINAL BOX ACTUATOR AND CONTROLLER TO BE MOUNTED ON THE SAME SIDE AS REHEAT COIL PIPING, REHEAT COIL PIPING TO RUN ABOVE CONTROLLER TO ALLOW ACCESS .
39. DIFFUSER THROWS TO BE FOUR-WAY UNLESS OTHERWISE NOTED.
40. USE ACOUSTICAL FLEX DUCT FOR FINAL CONNECTION TO DIFFUSER AND GRILLES. SEE SPECIFICATIONS. MAXIMUM FLEX DUCT LENGTH SHALL BE 5'-0". FLEXIBLE DUCTWORK SHALL BE INSTALLED TO MAINTAIN A CONSTANT CROSS-SECTIONAL AREA THROUGHOUT A BEND. BRANCH DUCTWORK SHALL BE ALIGNED AND INSTALLED IN A DIRECTION DIRECTLY TOWARD THE AIR TERMINAL AND DIFFUSERS TO PREVENT BUCKLING OR KINKING OF THE FLEXIBLE DUCT.
41. BOTTOM OF PIPE (B.O.P.) ELEVATIONS ARE ONLY APPROXIMATIONS, ACTUAL FINAL ELEVATIONS TO BE CONTRACTOR VERIFIED.
42. INSTALL ALL PIPING WITH PITCHES AS NOTED IN SPECIFICATIONS UNLESS NOTED OR SHOWN OTHERWISE.
43. ECCENTRIC PIPE REDUCERS SHALL BE USED UNLESS SHOWN OR NOTED OTHERWISE.
44. WATER PIPE CONNECTIONS TO AIR HEATING AND COOLING COILS SHALL BE MADE TO PROVIDE COUNTER FLOW BETWEEN WATER AND AIR.
45. SIZE OF SLEEVES SHALL BE BASED ON THE OUTSIDE PIPE DIAMETER INDICATED AND INCLUDING THE OUTSIDE DIAMETER OF INSULATION WHERE APPLICABLE.
46. ASBESTOS CONTAINING MATERIALS (ACM'S)MAY EXIST WITHIN THIS FACILITTY. CONTRACTOR SHALL IMMEDIATELY REPORT ANY ENCOUNTERED UNKNOWN OR SUSPECTED HAZARDOUS MATERIAL TO THE CONTRACTING OFFICER FOR TESTING.

DUCT PRESSURE CLASS TABLE

FAN NO.	DUCT INVOLVED	POSITIVE (P) OR NEGATIVE (N) PRESSURE	MINIMUM PRESSURE CLASS, W.G. INCH (MM)
SUPPLY FAN	UNIT DISCHARGE TO (E) SUPPLY DUCT SOUND ATTENUATOR	P	5 (125)
RETURN FAN	(E) RETURN DUCT SOUND ATTENUATOR TO RETURN PLENUM INLET	N	3 (75)

HVAC DESIGN DATA

OUTDOOR DESIGN TEMPERATURES	104°F	40°C	Db SUMMER	DESIGN ALTITUDE:	84 FT. 26 (M)
	72°F	22°C	Wb SUMMER		
	26°F	-3°C	Db WINTER		

INDOOR AREA DESIGN CONDITIONS	SUMMER		WINTER	
	Db °F (°C)	% HUMIDITY	Db °F (°C)	% HUMIDITY
RADIATION THERAPY OFFICES, PHARMACY	72 (22)	50	78 (25)	30

FAN SOUND POWER (OUTLET) dB SCHEDULE

OCTAVE BAND HZ	1 63	2 125	3 250	4 500	5 1000	6 2000	7 4000	8 8000	REMARKS
SUPPLY FAN	97	98	99	97	93	88	81	74	(1)
RETURN FAN	93	93	91	85	85	78	69	63	(1)

NOTES:

(1) CONTRACTOR SHALL VERIFY SOUND POWER WITH AHU-1 MANUFACTURER

ENERGY EFFICIENT MOTOR SCHEDULE

SCHEDULED HP [KW]	NOMINAL NEMA EFF.	SCHEDULED HP [KW]	NOMINAL NEMA EFF.	SCHEDULED HP [KW]	NOMINAL NEMA EFF.
1.0 E [0.75]	82.5	10 E [7.4]	89.5	50 E [37.3]	93.0
1.5 E [1.1]	84.0	15 E [11.1]	91.0	60 E [44.7]	93.6
2.0 E [1.5]	84.0	20 E [14.9]	91.0	75 E [55.9]	94.1
3.0 E [2.2]	86.5	25 E [18.6]	91.7	100 E [74.6]	94.1
5.0 E [3.7]	87.5	30 E [22.3]	92.4	125 E [93.2]	94.5
7.5 E [5.6]	88.5	40 E [29.8]	93.0	150 E [111.9]	95.0

BOOSTER PUMP SCHEDULE

SYMBOL	SERVICE	MINIMUM CAPACITY GPM	TOTAL DYNAMIC HEAD	TYPE	MAX RPM	MANUFACTURER (OR APPROVED EQUAL)	MOTOR MIN.H.P.	MOTOR VOLTAGE	MOTOR PHASE	MOTOR HERTZ	REMARKS
P-1	COIL HHW	(4)	30'	SERIES 80 INLINE	1750	BELL & GOSSETT	1/2	120	1	60	(1)(3)
P-2	COIL CHW	(4)	30'	SERIES 80 INLINE	1750	BELL & GOSSETT	1	460	3	60	(1)(2)

NOTES:

(1) CONNECT PUMP TO (E) JOHNSON CONTROL METASYS SYSTEM. PROVIDE 120V POWER FOR STARTER COIL.

(2) PUMP TO RUN ON CALL FOR COOLING.

(3) PUMP TO RUN ON CALL FOR HEATING

(4) SEE GPM ON AHU COIL SCHEDULE.

DUCT LEAKAGE CLASSIFICATION AND ALLOWABLE LEAKAGE TABLE

DUCT PRESSURE CLASS, W.G. IN[mm]	SEAL CLASS	APPLICABLE SEALING	SMACNA LEAKAGE CLASS RECTANGULAR DUCT	SMACNA LEAKAGE CLASS ROUND DUCT
3" [76]	B	TRAVERSE JOINTS AND SEAMS	12	6
4", 6", 10" [102, 152, 254]	A	JOINTS, SEAMS AND ALL WALL PENETRATIONS	6	3

EXHUAST FAN SCHEDULE

TAG	SERVICE	MANUFACTURER	MODEL	CFM	E.S.P.	HP	VOLTS	PHASE	LOCATION	WEIGHT LBS	REMARKS
EF-3	2ND & 3RD FLOORS WEST	GREENHECK (OR APPROVED EQUAL)	BCF-210	3270	1"	1	480	3	WEST PENTHOUSE	250	(1)(2)(3)
EF-7	2ND & 3RD FLOORS EAST	GREENHECK (OR APPROVED EQUAL)	BCF-212	5185	1"	1½	480	3	EAST PENTHOUSE	350	(1)(2)(3)
EF-25	2ND & 3RD FLOORS EAST	GREENHECK (OR APPROVED EQUAL)	BCF-210	3560	1"	1	480	3	EAST PENTHOUSE	250	(1)(2)(3)

NOTES:

(1) PROVIDE BACKDRAFT DAMPER.

(2) SUSPEND FROM STRUCTURE ABOVE, PROVIDE SEISMICALLY RESTRAINED SPRING VIBRATION ISOLATORS.

(3) START/STOP FAN WITH (E) JOHNSON METASYS SYSTEM.

K.F. DAVIS ENGINEERING, INC
530 LA GONDA WAY, SUITE E
DANVILLE, CA 94526

Revisions: (1) DATED 11/10/08; (2) DATED 11/19/08; (3) DATED 07/14/09; (4) DATED 12/05/2011

Drawing Title: MECHANICAL SCHEDULES

Project Title: BLDG 650 REPLACE AIR HANDLERS 1 THRU 4, 7 AND 9 - 15

Date: 12/05/11

Project No.: 612A4-07-342

Approved:

Approved: Medical Center Director

Drawn: RMK

Building Number:

DRAWING No. H1.2

Approved:

Approved: Chief, Engineering Service

Checked: KL

Location: MATHER VAMC MATHER CALIFORNIA

Dwg. Of

Department of Veterans Affairs

SCALE: 3/4"=1'-0" 1/2"=1'-0" 1/4"=1'-0" 1/8"=1'-0"

111308

AIR HANDLING UNIT SCHEDULE

TAG	SERVICE	MFR	MODEL	SUPPLY FAN CFM	SUPPLY FAN E.S.P. (IN. WG)	SUPPLY FAN QTY	SUPPLY FAN HP	RETURN FAN CFM	RETURN FAN E.S.P. (IN. WG)	RETURN FAN QTY	RETURN FAN HP	VOLTS	PHASE	MIN. OSA	HEATING COIL DATA TYPE	HEATING COIL DATA CAP. (MBH)	HEATING COIL DATA ROWS	HEATING COIL DATA FINS/FT	HEATING COIL DATA GPM	HEATING COIL DATA EWT	HEATING COIL DATA LWT	COOLING COIL DATA TYPE	COOLING COIL DATA CAP. (MBH)	COOLING COIL DATA ROWS	COOLING COIL DATA FINS/FT	COOLING COIL DATA GPM	COOLING COIL DATA EWT	COOLING COIL DATA LWT	WEIGHT (LBS)	REMARKS
AHU-10	2ND AND 3RD FLRS WEST	HAAKON (OR APPROVED EQUAL)	CUSTOM AIR HANDLER	17,295	2.0	1	20	14,195	1.0	1	7.5	460	3	3100	SW	200	1	48	13	180	50	UW	766	4	144	153	45	55	12,500	2 3 5 6 7 8 10 11 12
AHU-14	2ND AND 3RD FLRS EAST			22,850	2.0	1	20	19,250	1.0	1	7.5			3600												153			12,500	2 3 5 6 7 8 10 11 12
AHU-7	FIRST FLOOR LOBBY			6,850	2.5	2	10	5,850	1.5	2	5			1000		50			3.5				383			77			12,500	2 3 5 6 7 8 9 11 12
AHU-1	FIRST FLOOR NORTHWEST			28,000	2.5	2	40	20,700	1.5	2	20			7300		350		12	24				1942	6	108	388			37,000	2 3 5 6 7 8 11 9 12

NOTES:
1. NOT USED
2. PROVIDE COMBINATION MOTOR STARTER /DISCONNECT; COORDINATE WITH ELECTRICAL
3. PROVIDE 2-WAY VALVE PIPING PACKAGE, PROVIDE BOOSTER PUMPS P-1 AND P-2; SEE BOOSTER PUMP SCHEDULE △3 R.F.I. #15 △3
4. NOT USED
5. PROVIDE SMOKE DETECTOR IN SUPPLY AIR DUCT WIRED TO SHUTDOWN UNIT UPON ACTIVATION, SMOKE DETECTOR SHALL BE AN ADDRESSABLE SYSTEM DETECTOR, COMPATIBLE WITH (E) HOSPITAL FIRE ALARM SYSTEM. SMOKE DETECTOR PROVIDED & INSTALLED BY MECH. & WIRED BY ELEC., SMOKE DETECTOR SHALL BE OF SAME MANUFACTURER AS ALL OTHER FIRE ALARM DEVICES.
6. START/STOP UNIT WITH NEW JOHNSON "METASYS" SYSTEM, CONNECTED TO EXISTING ENERGY MANAGEMENT SYSTEM (EMS).
7. PROVIDE INTERNAL TRANSFORMER FOR LIGHTS AND RECEPTACLE.
8. UNIT MANUFACTURER TO PROVIDE START-UP.
9. PROVIDE UNIT WITH THE FOLLOWING MODULES: SUPPLY FAN W/ DUAL FANS (NOT REDUNDANT), COOLING COIL, HEATING COIL, FILTER W/ PRE-FILTERS AND BAG FILTERS (LIFT OUT STREAM), RETURN FAN W/ DUAL FANS (NOT REDUNDANT)
10. PROVIDE UNIT W/ THE FOLLOWING MODULES: SUPPLY FAN, COOLING COIL, HEATING COIL, FILTER W/ THE PRE-FILTERS AND BAG FILTERS (LIFT-OUT UPSTREAM), RETURN FAN.
11. FILTERS: PRE-FILTERS: 2" MERV 7 AAF PERFECT PLEAT HC, 21" MERV 15 AAF DRI-PAK 95% (OR APPROVED EQUAL) QUANTITY AND SIZES AS REQUIRED.
12. EACH SUPPLY FAN AND RETURN FAN SHALL BE EQUIPPED WITH IT'S OWN VARIABLE SPEED DRIVE.

VAV AIR TERMINAL UNIT SCHEDULE

TAG	MODEL/MFR (OR APPROVED EQUAL)	TERMINAL TYPE	INLET SIZE	DESIGN CFM	MAX CFM	MIN CFM	REHEAT COIL DATA SIZE (WxH)	REHEAT COIL DATA ROWS	REHEAT COIL DATA CIRCUITS	REHEAT COIL DATA GPM	REHEAT COIL DATA AIR ΔP	REHEAT COIL DATA OUTPUT (MBH)	REMARKS
TU-2.1	TITUS DESV-3000	VAV-RH	12"ø	1000	2000	450	16 X 15	2	MULTI	2	.06	33.2	1 2 3
TU-2.2			8"ø	600	900	200	12 X 10			2	.08	15.0	
TU-2.3			8"ø	400	900	150	12 X 10			2	.08	15.0	
TU-2.4			6"ø	200	500	80	12 X 8			1	.02	8.6	
TU-2.5			10"ø	800	1400	300	14 X 12½			2	.04	24.3	
TU-2.6			8"ø	600	900	200	12 X 10			2	.08	15.0	
TU-2.7			10"ø	840	1400	300	14 X 12½			2	.04	24.3	
TU-2.8			8"ø	540	900	200	12 X 10			2	.08	15.0	
TU-2.9			6"ø	270	500	100	12 X 8			1	.02	8.6	
TU-2.10			8"ø	600	900	200	12 X 10			2	.08	15.0	
TU-2.11			8"ø	525	900	145	12 X 10			1	.02	10.0	
TU-2.12			8"ø	600	900	200	12 X 10			2	.08	15.0	
TU-2.13			8"ø	600	900	200	12 X 10			2	.08	15.0	
TU-2.14			8"ø	700	900	300	12 X 10			2	.08	24.3	
TU-2.15			8"ø	500	900	200	12 X 10			2	.08	15.0	
TU-2.16			8"ø	700	900	300	12 X 10			2	.08	15.0	
TU-2.17			10"ø	800	1400	300	14 X 12½			2	.04	24.3	
TU-2.18			8"ø	700	900	300	12 X 10			2	.08	15.0	
TU-2.19			8"ø	700	900	300	12 X 10			2	.08	15.0	
TU-2.20			6"ø	100	500	80	12 X 8			1	.02	8.6	
TU-2.21			8"ø	700	900	300	12 X 10			2	.08	15.0	
TU-2.22			8"ø	700	900	300	12 X 10			2	.08	15.0	
TU-2.23			6"ø	350	500	180	12 X 8			1	.02	8.6	
TU-2.24			8"ø	700	900	300	12 X 10			2	.08	15.5	
TU-2.25			6"ø	350	500	100	12 X 8			1	.02	8.6	
TU-2.26			8"ø	500	900	180	12 X 10			2	.08	15.0	
TU-2.27			6"ø	300	500	100	12 X 8			1	.02	8.6	
TU-2.28			6"ø	215	500	70	12 X 8			1	.02	8.6	
TU-2.29			6"ø	300	500	100	12 X 8			1	.02	8.6	
TU-2.30			8"ø	600	900	200	12 X 10			2	.08	15.0	
TU-2.31			8"ø	600	900	200	12 X 10			2	.08	15.0	
TU-2.32			6"ø	360	500	100	12 X 8			1	.02	8.6	
TU-2.33			6"ø	400	500	150	12 X 8			1	.02	8.6	
TU-2.34			8"ø	600	900	200	12 X 10			2	.08	15.0	
TU-2.35			8"ø	750	900	250	12 X 10			2	.08	15.0	
TU-2.36			8"ø	500	900	150	12 X 10			2	.08	15.0	

NOTES:
1. PROVIDE JOHNSON WALL MOUNTED ZONE THERMOSTAT, JOHNSON DDC CONTROLLER, HOT WATER REHEAT COIL.
2. PROVIDE STERI-LOC HIGH DENSITY, RIGID INSULATION AND Z-STRIP CONSTRUCTION ON INTERIOR OF BOX AND PLENUM; INSULATION SURFACE EXPOSED TO AIR STREAM SHALL BE NON-POROUS AND CLEANABLE.
3. BALANCE (N) VAV AIR TERMINAL UNIT TO CFM & GPM SHOWN.

VAV AIR TERMINAL UNIT SCHEDULE

TAG	MODEL/MFR (OR APPROVED EQUAL)	TERMINAL TYPE	INLET SIZE	DESIGN CFM	MAX CFM	MIN CFM	REHEAT COIL DATA SIZE (WxH)	REHEAT COIL DATA ROWS	REHEAT COIL DATA CIRCUITS	REHEAT COIL DATA GPM	REHEAT COIL DATA AIR ΔP	REHEAT COIL DATA OUTPUT (MBH)	REMARKS
TU-1.700	TITUS DESV-300	VAV-RH	6"ø	275	500	100	12 X 8	2	MULTI	1	.02	8.6	1 2 3
TU-1.701			8"ø	500	900	200	12 X 10			2	.08	17.6	
TU-1.702			6"ø	300	500	150	12 X 8			2	.02	8.6	
TU-1.703			12"ø	1150	2000	400	16 X 15			2	.06	33.2	
TU-1.704			12"ø	1120	2000	400	16 X 15			2	.06	33.2	
TU-1.705			10"ø	800	1400	500	14 X 12 ½			2	.04	22.4	
TU-1.706			14"ø	2400	3000	500	20 X 12 ½			2	.01	51.4	

NOTES:
1. PROVIDE JOHNSON WALL MOUNTED ZONE THERMOSTAT, JOHNSON DDC CONTROLLER, HOT WATER REHEAT COIL.
2. PROVIDE STERI-LOC HIGH DENSITY, RIGID INSULATION AND Z-STRIP CONSTRUCTION ON INTERIOR OF BOX AND PLENUM; INSULATION SURFACE EXPOSED TO AIR STREAM SHALL BE NON-POROUS AND CLEANABLE.
3. BALANCE (N) VAV AIR TERMINAL UNIT TO CFM & GPM SHOWN.

VAV AIR TERMINAL UNIT SCHEDULE

TAG	MODEL/MFR (OR APPROVED EQUAL)	TERMINAL TYPE	INLET SIZE	DESIGN CFM	MAX CFM	MIN CFM	REHEAT COIL DATA SIZE (WxH)	REHEAT COIL DATA ROWS	REHEAT COIL DATA CIRCUITS	REHEAT COIL DATA GPM	REHEAT COIL DATA AIR ΔP	REHEAT COIL DATA OUTPUT (MBH)	REMARKS
TU-3.1	TITUS DESV-3000	VAV-RH	8"ø	600	900	200	12 X 10	2	MULTI	1	.08	17.6	1 2 3
TU-3.2			6"ø	150	500	80	12 X 8			1	.02	8.6	
TU-3.3			6"ø	300	500	100	12 X 8			1	.02	8.6	
TU-3.4			10"ø	800	1400	300	14 X 12½			2	.04	22.4	
TU-3.5			6"ø	400	500	100	12 X 8			2	.02	8.6	
TU-3.6			6"ø	300	500	100	12 X 8			2	.02	8.6	
TU-3.7			6"ø	250	500	100	12 X 8			1	.02	8.6	
TU-3.8			10"ø	800	1400	300	14 X 12½			2	.02	22.4	
TU-3.9			6"ø	250	500	100	12 X 8			1	.02	8.6	
TU-3.10			8"ø	700	900	250	12 X 10			2	.08	17.6	
TU-3.11			6"ø	250	500	100	12 X 8			2	.02	8.6	
TU-3.12			6"ø	390	500	100	12 X 8			2	.02	8.6	
TU-3.13			6"ø	300	500	200	12 X 8			2	.02	8.6	
TU-3.14			8"ø	600	900	400	12 X 10			2	.08	17.6	
TU-3.15			12"ø	1350	2000	800	16 X 15			2	.06	32.2	
TU-3.16			12"ø	1350	2000	400	16 X 15			2	.06	32.2	
TU-3.17			10"ø	900	1400	300	14 X 12½			2	.04	22.4	
TU-3.18			8"ø	700	900	200	12 X 10			2	.08	17.6	
TU-3.19			10"ø	800	1400	300	14 X 12½			2	.04	22.4	
TU-3.20			10"ø	800	1400	300	14 X 12½			2	.04	22.4	
TU-3.21			12"ø	1140	2000	400	16 X 15½			2	.06	32.2	
TU-3.22			8"ø	700	900	200	12 X 10			2	.06	17.6	
TU-3.23			8"ø	660	900	250	12 X 10			2	.08	17.6	
TU-3.24			8"ø	560	900	200	12 X 10			2	.08	17.6	
TU-3.25			8"ø	700	900	300	12 X 10			2	.08	17.6	
TU-3.26			8"ø	700	900	200	12 X 10			2	.08	17.6	
TU-3.27			8"ø	700	900	200	12 X 10			2	.08	17.6	
TU-3.28			10"ø	900	1400	300	14 X 12½			2	.04	22.4	
TU-3.29			10"ø	800	1400	300	14 X 12½			2	.04	22.4	
TU-3.30			10"ø	800	1400	300	14 X 12½			2	.04	22.4	
TU-3.31			10"ø	800	1400	300	14 X 12½			2	.04	22.4	
TU-3.32			8"ø	500	900	180	12 X 10			2	.08	17.6	

NOTES:
1. PROVIDE JOHNSON WALL MOUNTED ZONE THERMOSTAT, JOHNSON DDC CONTROLLER, HOT WATER REHEAT COIL.
2. PROVIDE STERI-LOC HIGH DENSITY, RIGID INSULATION AND Z-STRIP CONSTRUCTION ON INTERIOR OF BOX AND PLENUM; INSULATION SURFACE EXPOSED TO AIR STREAM SHALL BE NON-POROUS AND CLEANABLE.
3. BALANCE (N) VAV AIR TERMINAL UNIT TO CFM & GPM SHOWN.

SCALE: 3/4"=1'-0" 1/2"=1'-0" 1/4"=1'-0" 1/8"=1'-0"

111908

K.F. DAVIS ENGINEERING, INC
530 LA GONDA WAY, SUITE E
DANVILLE, CA 94526

Revisions: △1 DATED 11/10/08; △2 DATED 11/19/08; △3 DATED 07/14/09; △4 DATED 12/05/2011; △5 AS BUILTS FOR AHU 1 08/14/14

Drawing Title: MECHANICAL SCHEDULES

Project Title: BLDG 650 REPLACE AIR HANDLERS 1 THRU 4, 7 AND 9 – 15

Date: 12/05/11
Project No.: 612A4-07-342
DRAWING No. H1.3
Dwg. Of

Approved:
Approved: Medical Center Director
Drawn: RMK
Building Number:
Approved:
Approved: Chief, Engineering Service
Checked: KL
Location: MATHER VAMC MATHER CALIFORNIA

Department of Veterans Affairs

VAV AIR TERMINAL UNIT SCHEDULE

TAG	MODEL/MFR (OR APPROVED EQUAL)	TERMINAL TYPE	INLET SIZE △3	DESIGN CFM	MAX CFM	MIN CFM	REHEAT COIL DATA SIZE (WxH)	ROWS	CIRCUITS	GPM	AIR ΔP	OUTPUT (MBH)	REMARKS
TU-1.100	TITUS DESV-3000	VAV-RH	6"ø	150	500	80	12 X 8	2	MULTI	1	.02	8.6	△1 △2 △3
TU-1.101			6"ø	180	500	90	12 X 8			1	.02	8.6	
TU-1.102			10"ø	825	1400	350	14 X 12½		△3	2	.04	24.3	
TU-1.103			8"ø	400	900	180	12 X 10			2	.08	15.0	
TU-1.104			6"ø	150	500	80	12 X 8			1	.02	8.6	
TU-1.105			10"ø	800	1400	300	14 X 12½		△3	2	.04	24.3	
TU-1.106			12"ø	1200	2000	500	16 X 15			2	.06	32.2	
TU-1.107			8"ø	400	900	180	12 X 10			2	.08	15.0	
TU-1.108			8"ø	450	900	200	12 X 10			2	.08	15.0	
TU-1.109			8"ø	625	900	250	12 X 10			2	.08	15.0	
TU-1.110			8"ø	400	900	180	12 X 10			2	.08	15.0	
TU-1.111			6"ø	200	500	80	12 X 8			1	.02	8.6	
TU-1.112		△3	10"ø	800	1400	320	14 X 12½ △3			2	.04	24.3	
TU-1.113			10"ø	850	1400	300	14 X 12½			2	.04	24.3 △3	
TU-1.114			8"ø	600	900	250	12 X 10			2	.08	15.0	
TU-1.115			10"ø	960	1400	450	14 X 12½		△3	2	.04	24.3	
TU-1.116			8"ø	600	900	200	12 X 10			2	.08	15.0	
TU-1.117			8"ø	700	900	300	12 X 10			2	.08	15.0	
TU-1.118			8"ø	500	900	200	12 X 10			2	.08	15.0	
TU-1.119			10"ø	900	1400	400	14 X 12½		△3	2	.04	24.3	

NOTES:

△1 PROVIDE JOHNSON WALL MOUNTED ZONE THERMOSTAT, JOHNSON DDC CONTROLLER, HOT WATER REHEAT COIL.

△2 PROVIDE STERI-LOC HIGH DENSITY, RIGID INSULATION AND Z-STRIP CONSTRUCTION ON INTERIOR OF BOX AND PLENUM; INSULATION SURFACE EXPOSED TO AIR STREAM SHALL BE NON-POROUS AND CLEANABLE.

△3 BALANCE (N) VAV AIR TERMINAL UNIT TO CFM AND GPM SHOWN.

VAV AIR TERMINAL UNIT SCHEDULE

TAG	MODEL/MFR (OR APPROVED EQUAL)	TERMINAL TYPE	INLET SIZE	DESIGN CFM	MAX CFM	MIN CFM	REHEAT COIL DATA SIZE (WxH)	ROWS	CIRCUITS	GPM	AIR ΔP	OUTPUT (MBH)	REMARKS
TU-1.200													NOT USED
TU-1.201	TITUS DESV-3000	VAV-RH	10"ø	880	1400	540	14 X 12½	2	MULTI	2	.04	27.4	△1 △2 △3
TU-1.202			10"ø	800	1400	300	14 X 12½			2	.04	22.4	
TU-1.203			8"ø	550	900	200	12 X 10			1	.08	17.6	
TU-1.204			14"ø	1500	3000	785	20 X 17½			3	.05	43.9	
TU-1.205													NOT USED
TU-1.206	△3												NOT USED
TU-1.207													NOT USED
TU-1.208				△3									NOT USED
TU-1.209	TITUS DESV-3000	VAV-RH	8"ø	500	900	200	12 X 10	2	MULTI	1	.08	17.6	△1 △2 △3
TU-1.210			8"ø	500	900	200	12 X 10			1	.08	17.6	
TU-1.211			8"ø	500	900	200	12 X 10			1	.08	17.6	
TU-1.212			6"ø	200	500	100	12 X 8			1	.02	8.6	
TU-1.213			8"ø	500	900	200	12 X 10			1	.08	△3 17.6	
TU-1.214			6"ø	300	500	150	12 X 8			1	.02	8.6	
TU-1.215			8"ø	700	900	300	12 X 10			1	.08	17.6	
TU-1.216													NOT USED
TU-1.217	TITUS DESV-3000	VAV-RH	8"ø	710	900	200	12 X 10	2	MULTI	1	.08	△3 17.6	△1 △2 △3
TU-1.218	TITUS DESV-3000	VAV-RH	10"ø	1080	1400	350	14 X 12½	2	MULTI	2	.04	22.4	△1 △2 △3

NOTES:

△1 PROVIDE JOHNSON WALL MOUNTED ZONE THERMOSTAT, JOHNSON DDC CONTROLLER, HOT WATER REHEAT COIL.

△2 PROVIDE STERI-LOC HIGH DENSITY, RIGID INSULATION AND Z-STRIP CONSTRUCTION ON INTERIOR OF BOX AND PLENUM; INSULATION SURFACE EXPOSED TO AIR STREAM SHALL BE NON-POROUS AND CLEANABLE.

△3 BALANCE (N) VAV AIR TERMINAL UNIT TO CFM AND GPM SHOWN.

VAV AIR TERMINAL UNIT SCHEDULE

TAG	MODEL/MFR (OR APPROVED EQUAL)	TERMINAL TYPE	INLET SIZE △3	DESIGN CFM	MAX CFM	MIN CFM	REHEAT COIL DATA SIZE (WxH)	ROWS	CIRCUITS	GPM	AIR ΔP	OUTPUT (MBH)	REMARKS
TU-1.311	TITUS DESV-3000	VAV-RH	8"ø	650	900	260	12 X 10	2	MULTI	2	.08	15.0	△1 △2 △3
TU-1.312			6"ø	300	500	100	12 X 8 △3		△3	1	.04	△3 8.0	
TU-1.313			12"ø	1000	2000	285	16 X 15			2	.06	32.2	
TU-1.314			8"ø	500	900	200	12 X 10			2	.08	15.0	
TU-1.315			10"ø	900	1400	270	14 X 12½ △3			2	.06	△3 18.0	

NOTES:

△1 PROVIDE JOHNSON WALL MOUNTED ZONE THERMOSTAT, JOHNSON DDC CONTROLLER, HOT WATER REHEAT COIL.

△2 PROVIDE STERI-LOC HIGH DENSITY, RIGID INSULATION AND Z-STRIP CONSTRUCTION ON INTERIOR OF BOX AND PLENUM; INSULATION SURFACE EXPOSED TO AIR STREAM SHALL BE NON-POROUS AND CLEANABLE.

△3 BALANCE (N) VAV AIR TERMINAL UNIT TO CFM AND GPM SHOWN.

VAV AIR TERMINAL UNIT SCHEDULE

TAG	MODEL/MFR (OR APPROVED EQUAL)	TERMINAL TYPE	INLET SIZE △3	DESIGN CFM	MAX CFM	MIN CFM	REHEAT COIL DATA SIZE (WxH)	ROWS	CIRCUITS	GPM	AIR ΔP	OUTPUT (MBH)	REMARKS
TU-1.400	TITUS DESV-3000	VAV-RH	12"ø	1280	2000	400	16 X 15	2	MULTI	2	.06	33.2	△1 △2 △3
TU-1.401			6"ø	400	500	150	12 X 8			1	.02	8.6	
TU-1.402			6"ø	150	500	80	12 X 8			1	.02	8.6	
TU-1.403			8"ø	500	900	200	12 X 10			2	.08	15.0	
TU-1.404			10"ø	825	1400	350	14 X 12½			4	.04	24.3	
TU-1.405			8"ø	500	900	200	12 X 10			2	.08	15.0	
TU-1.406			8"ø	600	900	250	12 X 16			2	.08	15.0	
TU-1.407													NOT USED
TU-1.408													NOT USED
TU-1.409	TITUS DESV-3000	VAV-RH	10"ø	900	1400	400	14 X 12½	2	MULTI	4	.04	24.3	△1 △2 △3
TU-1.410			8"ø	600	900	250	12 X 10			2	.08	15.0	
TU-1.411			8"ø	500	900	250	12 X 10			2	.08	15.0	
TU-1.412			10"ø	825	1400	350	14 X 12½			4	.04	24.3	
TU-1.413			8"ø	500	900	200	12 X 10			2	.04	15.0	
TU-1.414			8"ø	500	900	200	12 X 10		△3	2	.04	△3 15.0	
TU-1.415													NOT USED
TU-1.416	TITUS DESV-3000	VAV-RH	10"ø	1000	1400	400	14 X 12½	2	MULTI	4	.04	24.3	△1 △2 △3
TU-1.417	TITUS DESV-3000	VAV-RH	12"ø	1200	2000	500	16 X 15	2	MULTI	2	.06	33.2	△1 △2 △3

NOTES:

△1 PROVIDE JOHNSON ALL MOUNTED ZONE THERMOSTAT, JOHNSON DDC CONTROLLER, HOT WATER REHEAT COIL.

△2 PROVIDE STERI-LOC HIGH DENSITY, RIGID INSULATION AND Z-STRIP CONSTRUCTION ON INTERIOR OF BOX AND PLENUM; INSULATION SURFACE EXPOSED TO AIR STREAM SHALL BE NON-POROUS AND CLEANABLE.

△3 BALANCE (N) VAV AIR TERMINAL UNIT TO CFM AND GPM SHOWN.

SCALE: 3/4"=1'-0" 1/2"=1'-0" 1/4"=1'-0" 1/8"=1'-0"

011408

K.F. DAVIS ENGINEERING, INC
530 LA GONDA WAY, SUITE E
DANVILLE, CA 94526

Revisions: △3 DATED 07/14/09

Drawing Title: MECHANICAL SCHEDULES

Project Title: BLDG 650 REPLACE AIR HANDLERS 1 THRU 4, 7 AND 9 – 15

Date: 12/05/11

Project No.: 612A4-07-342

Approved:

Approved: Medical Center Director

Drawn: RMK

Building Number:

DRAWING No. H1.4

Approved:

Approved: Chief, Engineering Service

Checked: KL

Location: MATHER VAMC MATHER CALIFORNIA

Dwg. Of

Department of Veterans Affairs

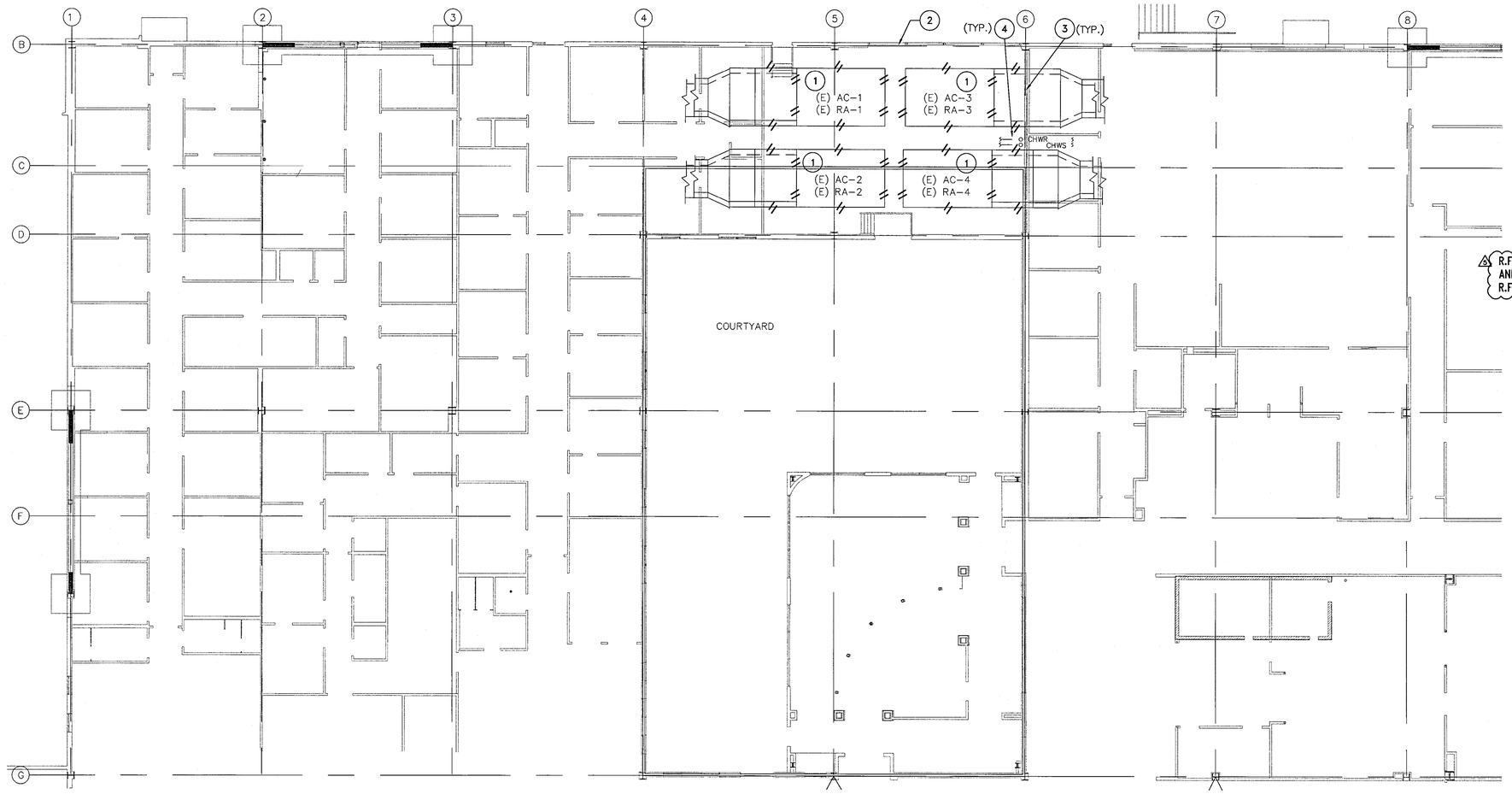

BLDG 650 MECH ROOM DEMOLITION PLAN

SCALE: 1/8" = 1'-0"

R.F.I. #5 AND R.F.I. #7

DEMOLITION NOTES:

1. REMOVE AIR HANDLING UNIT. DEMOLITION SHALL INCLUDE REMOVAL OF ALL CATWALKS, DUCTWORK, PIPING, HANGERS, PUMPS, CONTROLS, CONCRETE FLOOR HOUSEKEEPING PADS AND OTHER ASSOCIATED EQUIPMENT. DEMOLISH COOLING COIL AND DUCTWORK, DRAIN LINES AND ROOF RELIEF VENTS.
2. CONTRACTOR SHALL REMOVE OUTDOOR AIR LOUVER. CONTRACTOR SHALL PATCH OPENING IN FAN ROOM EXTERIOR WALL TO MATCH EXISTING WALL. PAINT TO MATCH SURROUNDING SURFACES. SEE ARCH DRAWINGS.
3. CUT AND PATCH AS REQUIRED FOR INSTALLATION OF WORK: PATCH TO MATCH (E) ADJACENT MATERIALS AND FINISHES.
4. CONTRACTOR SHALL PROPERLY TERMINATE ALL UTILITIES PER SELECTIVE DEMOLITION SPECIFICATIONS SECTION; REMOVE UNUSED PIPING BACK TO WITHIN 6" OF ACTIVE MAIN AND CAP (TYPICAL).

SCALE: 3/4"=1'-0" 1/2"=1'-0" 1/4"=1'-0" 1/8"=1'-0"

011408

BLDG 650

KEY PLAN NORTH

K.F. DAVIS ENGINEERING, INC
530 LA GONDA WAY, SUITE E
DANVILLE, CA 94526

Revisions: 1 DATED 11/10/08; 2 DATED 11/19/08; 3 DATED 07/14/09; 4 DATED 12/05/2011; 5 AS BUILTS FOR AHU 1 08/14/14	Drawing Title: DEMOLITION – 1ST FLOOR UNITS 1 THRU 4	Project Title: BLDG 650 REPLACE AIR HANDLERS 1 THRU 4, 7 AND 9 – 15	Date: 12/05/11
			Project No.: 612A4-07-342
Approved:	Approved: Medical Center Director	Drawn: RMK	Building Number:
Approved:	Approved: Chief, Engineering Service	Checked: KL	Location: MATHER VAMC MATHER CALIFORNIA
			DRAWING No. H2.1 Dwg. Of

Department of Veterans Affairs

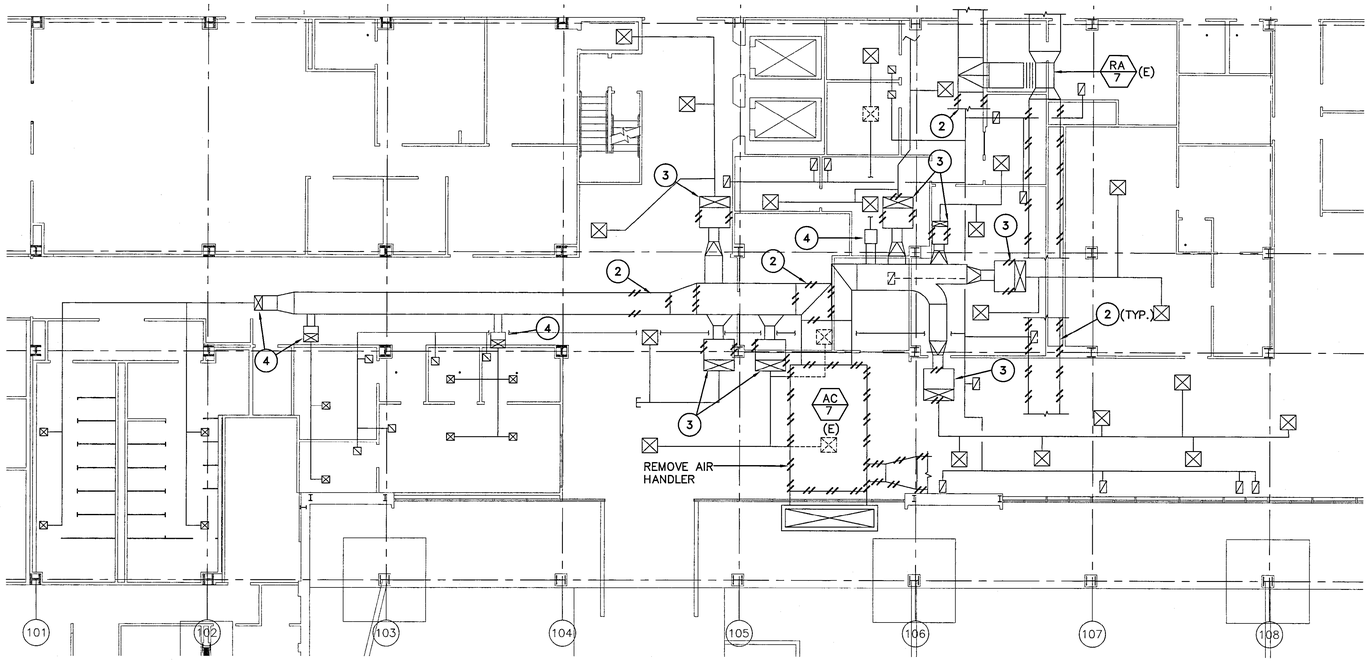

PARTIAL 1ST FLOOR MECH DEMO PLAN

SCALE: 1/8" = 1'-0"

NORTH

SCALE: 3/4"=1'-0"

GENERAL NOTES:

1. CUT & PATCH AS REQUIRED FOR INSTALLATION OF WORK, PATCH TO MATCH (E) ADJACENT MATERIALS & FINISHES.
2. SEE H1.1 FOR PHASING NOTES

SHEET NOTES:

1. REMOVE HHW COIL & SECTION OF DUCTWORK TO ALLOW FOR INSTALLATION OF (N) VAV BOX.
2. REMOVE DUCTWORK, INCLUDING INSULATION, HANGERS, DAMPERS, ETC.
3. REMOVE VAV BOX AND CONTROLS.
4. VAV BOX TO REMAIN (INSTALLED AS PART OF "PHASE II" PROJECT)

DEMOLITION NOTE:

THERE ARE 6 TO 10 OBSOLESCENT ANTENNAS AND SIMILAR ROOF MOUNTED EQUIPMENT WHICH THE CONTRACTOR SHALL REMOVE AND DISPOSE OF AS PART OF THIS PROJECT. THE VA WILL TAG AND IDENTIFY SPECIFIC ITEMS FOR REMOVAL.

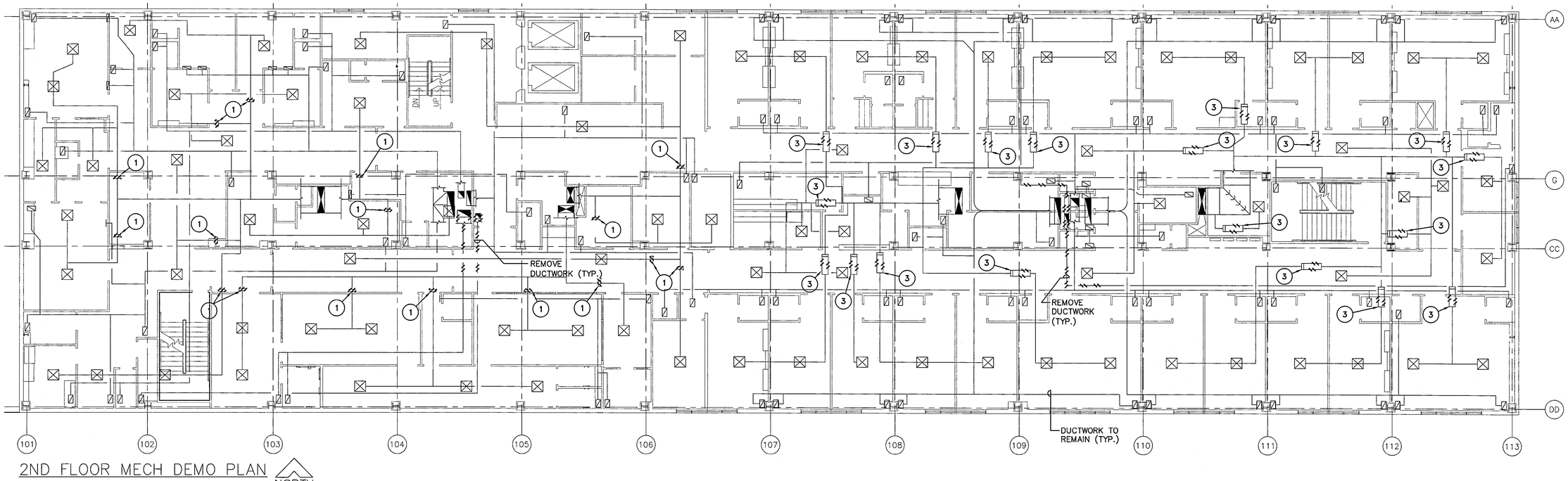

2ND FLOOR MECH DEMO PLAN

SCALE: 1/8" = 1'-0"

NORTH

SCALE: 1/2"=1'-0"

SCALE: 1/4"=1'-0"

SCALE: 1/8"=1'-0"

011508

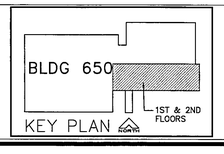

K.F. DAVIS ENGINEERING, INC
530 LA GONDA WAY, SUITE E
DANVILLE, CA 94526

Revisions: 1 DATED 11/10/08; 2 DATED 11/19/08; 3 DATED 07/14/09; 4 DATED 12/05/2011	Drawing Title: DEMOLITION – 1ST AND 2ND FLOOR UNITS 7 AND 9 THRU 15	Project Title: BLDG 650 REPLACE AIR HANDLERS 1 THRU 4, 7 AND 9 – 15	Date: 12/05/11
			Project No.: 612A4-07-342
Approved:	Approved: Medical Center Director	Drawn: RMK	Building Number:
Approved:	Approved: Chief, Engineering Service	Checked: KL	Location: MATHER VAMC MATHER CALIFORNIA
			DRAWING No. H2.2 Dwg. Of

Department of Veterans Affairs

GENERAL NOTES:

1. CUT & PATCH AS REQUIRED FOR INSTALLATION OF WORK, PATCH TO MATCH (E) ADJACENT MATERIALS & FINISHES.
2. SEE H1.1 FOR PHASING NOTES

SHEET NOTES:

(1) REMOVE HHW COIL & SECTION OF DUCTWORK TO ALLOW FOR INSTALLATION OF (N) VAV BOX.

(2) REMOVE DUCTWORK INCLUDING INSULATION, DAMPERS, HANGERS, ETC.

(3) REMOVE VAV BOX AND CONTROLS.

DEMOLITION NOTE:

THERE ARE 6 TO 10 OBSOLESCENT ANTENNAS AND SIMILAR ROOF MOUNTED EQUIPMENT WHICH THE CONTRACTOR SHALL REMOVE AND DISPOSE OF AS PART OF THIS PROJECT. THE VA WILL TAG AND IDENTIFY SPECIFIC ITEMS FOR REMOVAL.

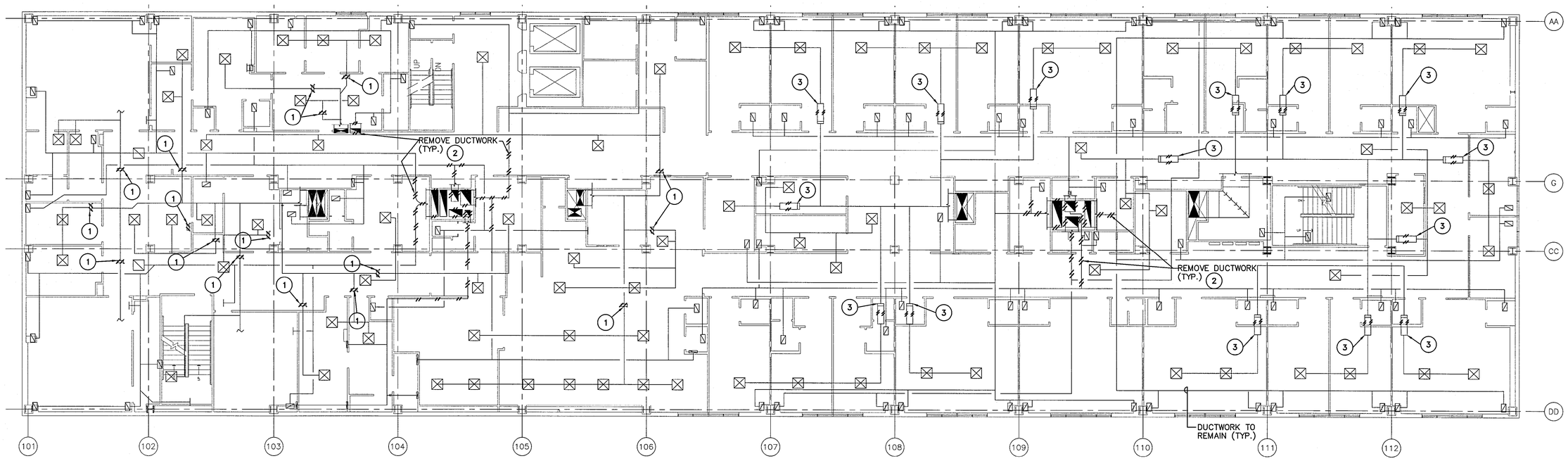

3RD FLOOR MECH DEMOLITION PLAN

SCALE: 1/8" = 1'-0"

NORTH

SCALE: 3/4"=1'-0" 1/2"=1'-0" 1/4"=1'-0" 1/8"=1'-0"

011508

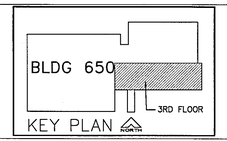

K.F. DAVIS ENGINEERING, INC
530 LA GONDA WAY, SUITE E
DANVILLE, CA 94526

Revisions: 1 DATED 11/10/08; 2 DATED 11/19/08; 3 DATED 07/14/09; 4 DATED 12/05/2011	Drawing Title: DEMOLITION – 3RD FLOOR UNITS 9 THRU 15	Project Title: BLDG 650 REPLACE AIR HANDLERS 1 THRU 4, 7 AND 9 – 15	Date: 12/05/11
			Project No.: 612A4-07-342
Approved:	Approved: Medical Center Director	Drawn: RMK	Building Number:
Approved:	Approved: Chief, Engineering Service	Checked: KL	Location: MATHER VAMC MATHER CALIFORNIA
			DRAWING No. H2.3 Dwg. Of

Department of Veterans Affairs

GENERAL NOTES:

1. CUT & PATCH AS REQUIRED FOR INSTALLATION OF WORK, PATCH TO MATCH (E) ADJACENT MATERIALS & FINISHES.
2. SEE H1.1 FOR PHASING NOTES

SHEET NOTES:

1. REMOVE AIR HANDLER, INCLUDING BRANCH PIPING, PUMPS, CONTROLS, ETC.
2. REMOVE RETURN FAN, DUCTWORK, HANGERS, SUPPORT, ETC.
3. REMOVE EXHAUST FAN, DUCTWORK, HANGERS, SUPPORT, ETC.
4. REMOVE DUCTWORK, INSULATION, HANGERS, SUPPORT, ETC.
5. DUCT DOWN THRU FLOOR TO REMAIN, CONNECT TO (N) WORK.
6. REMOVE CONCRETE PAD, HANGERS, SUPPORTS, ETC. PATCH FLOOR WALL AND ROOF OPENINGS WATER TIGHT.
7. REMOVE FILTERS AND REPLACE WITH (N).
8. REMOVE TEMPERATURE CONTROLS.
9. REMOVE AND MODIFY PIPING FOR CONFIGURATION OF NEW EQUIPMENT.
10. REMOVE UN-USED PIPING BACK TO WITHIN 6" OF ACTIVE MAIN & CAP.

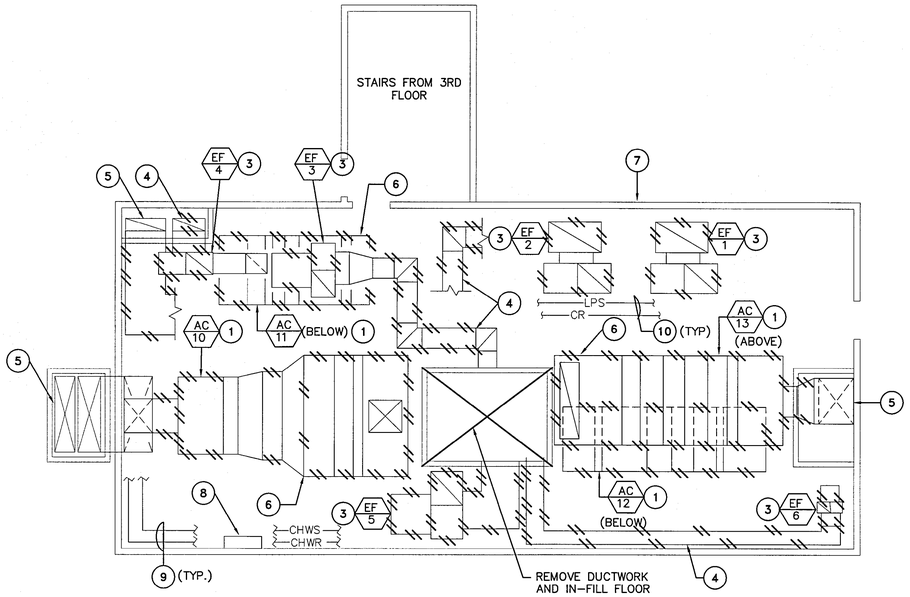

ROOF MECH DEMO PLAN PENTHOUSE (WEST)
SCALE: 1/4" = 1'-0"

NORTH

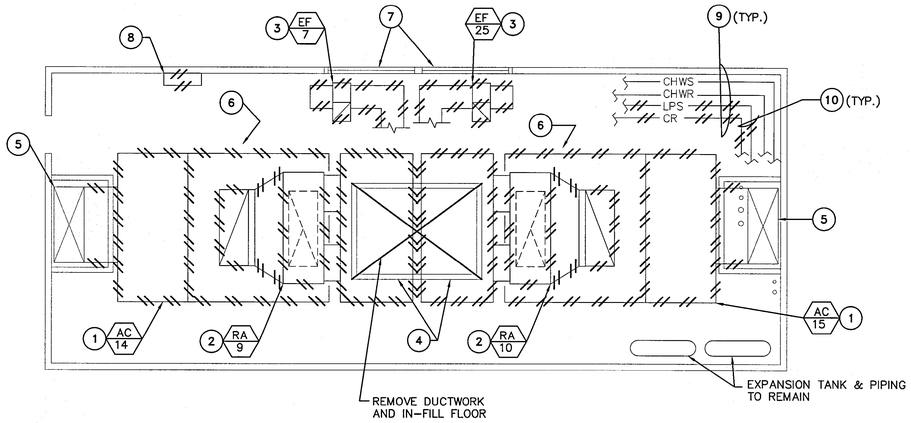

ROOF MECH DEMO PLAN PENTHOUSE (EAST)
SCALE: 1/4" = 1'-0"

NORTH

EQUIPMENT	LOCATION AT BUILDING 650
CP-25	EAST PENTHOUSE
CP-26	EAST PENTHOUSE
CP-18	1ST FLOOR INTERSTITIAL SPACE CEILING
CP-12	1ST FLOOR MECHANICAL EQUIPMENT ROOM 1D645
CP-13	1ST FLOOR MECHANICAL EQUIPMENT ROOM 1D645
CP-14	1ST FLOOR MECHANICAL EQUIPMENT ROOM 1D645
CP-15	BASEMENT MECHANICAL EQUIPMENT ROOM
AC-9	WEST PENTHOUSE
CP-20	WEST PENTHOUSE
CP-21	WEST PENTHOUSE
CP-22	WEST PENTHOUSE
CP-23	WEST PENTHOUSE
CP-24	WEST PENTHOUSE
RA-8	WEST PENTHOUSE

1

SCALE: 3/4"=1'-0" SCALE: 1/2"=1'-0" SCALE: 1/4"=1'-0" SCALE: 1/8"=1'-0"

011408

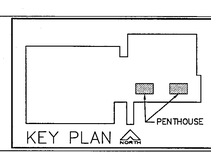

KEY PLAN

K.F. DAVIS ENGINEERING, INC
530 LA GONDA WAY, SUITE E
DANVILLE, CA 94526

Revisions: 1 DATED 11/10/08; 2 DATED 11/19/08; 3 DATED 07/14/09; 4 DATED 12/05/2011

Approved:

Approved:

Drawing Title: DEMOLITION – PENTHOUSE UNITS 9 THRU 15

Approved: Medical Center Director

Approved: Chief, Engineering Service

Drawn: RMK

Checked: KL

Project Title: BLDG 650 REPLACE AIR HANDLERS 1 THRU 4, 7 AND 9 – 15

Building Number:

Location: MATHER VAMC MATHER CALIFORNIA

Date: 12/05/11

Project No.: 612A4-07-342

DRAWING No. H2.4

Dwg. Of

Department of Veterans Affairs

GENERAL NOTES:

1. CUT AND PATCH AS REQ'D FOR INSTALLATION OF WORK, PATCH TO MATCH (E) ADJACENT MATERIALS AND FINISHES.
2. SEE H1.1 FOR PHASING NOTES.
3. EXISTING RETURN AND EXHAUST DUCTWORK NOT SHOWN FOR CLARITY.

SHEET NOTES:

1. THIS DRAWING SHOWS THE APPROXIMATE LOCATIONS OF EXISTING DUCT STATIC PRESSURE SENSORS. FIELD VERIFY LOCATIONS. CONTRACTOR SHALL DEMOLISH SENSORS AND INSTALL NEW SENSORS AND TRANSMITTERS. SEE SEQUENCE OF OPERATION.
2. CONNECT NEW 4" CHWS & R PIPING TO EXISTING 6" PIPING ABOVE CORRIDOR CEILING. PROTECT AND STORE ANY AFFECTED CEILING TILES. REPLACE TILES UPON COMPLETION OF THIS WORK. ROUTE NEW 4" CHILLED WATER PIPING DOWN WALL AND INTO THE CRAWL SPACE TO THE MECHANICAL ROOM BELOW (AHU-1, 3)
3. INSTALL (N) VAV BOX IN SAME LOCATION AS (E) VAV BOX. CONN. TO (E) HHWS & R PIPING & (E) DUCTWORK; REPLACE (E) THERMOSTAT WITH (N) WIRELESS JCI THERMOSTAT.
4. (E) VAV BOX TO REMAIN (INSTALLED AS A PART OF PHASE II PROJECT). PRIOR TO DEMOLITION, MEASURE (E) VAV BOX MAX. & MIN. CFM, GPM, & AIR FLOW AT EACH OUTLET. AT COMPLETION OF PROJECT RETURN (E) VAV BOX TO (E) AIR AND WATER FLOWS RECORDED PRIOR TO CONSTRUCTION. (3)
5. BALANCE (E) DIFFUSER OR GRILLE TO (N) CFM SHOWN.
6. BALANCE RETURN AIR TO EQUAL SUPPLY AIR IN EACH ROOM, U.O.N.; (E) RETURN AIR DUCTWORK NOT SHOWN FOR CLARITY.

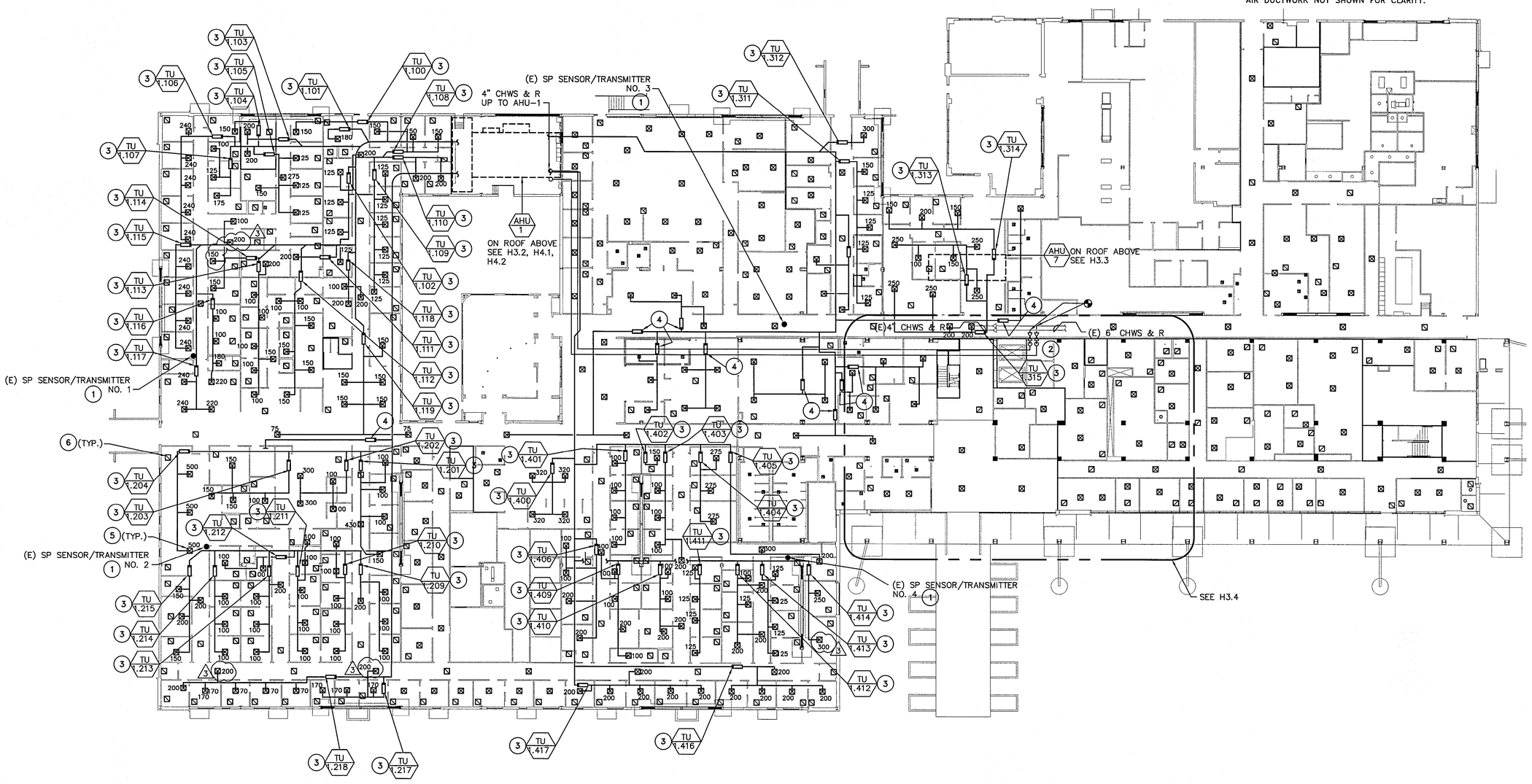

FIRST FLOOR PLAN

SCALE: 1/16" = 1'-0"

NORTH

BLDG 650

KEY PLAN

K.F. DAVIS ENGINEERING, INC
530 LA GONDA WAY, SUITE E
DANVILLE, CA 94526

Revisions: 3 DATED 07/14/09	Drawing Title: FIRST FLOOR PLAN	Project Title: BLDG 650 REPLACE AIR HANDLERS 1 THRU 4, 7 AND 9 – 15	Date: 12/05/11
			Project No.: 612A4-07-342
Approved:	Approved: Medical Center Director	Drawn: RMK	Building Number:
Approved:	Approved: Chief, Engineering Service	Checked: KL	Location: MATHER VAMC MATHER CALIFORNIA
			DRAWING No. H3.1 Dwg. Of

Department of Veterans Affairs

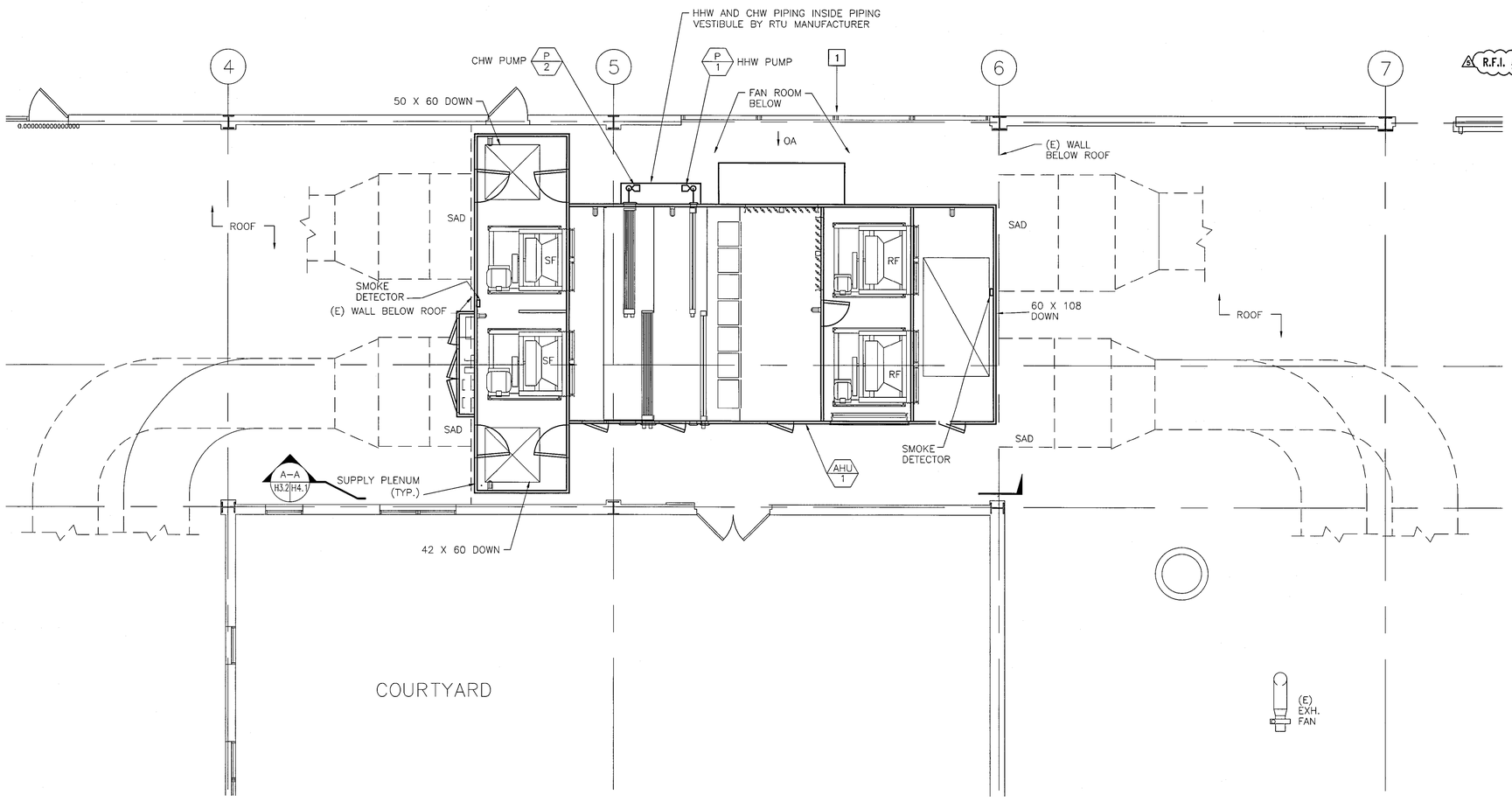

GENERAL NOTES:

1. ROOF PENETRATIONS SHALL BE WITHIN THE CURB. ENLARGE THE OPENING BY APPROX. 4" IN EACH DIRECTION AS NECESSARY TO MAKE CONNECTIONS.
2. SEAL DUCT CONNECTIONS TO RTU AIR TIGHT. PROVIDE LOW-PRESSURE-DROP LIFT-OUT SAFETY GRATING AT EACH SUPPLY AND RETURN FLOOR OPENING.
3. PROVIDE SMOKE DETECTOR FOR RTU FAN SHUTDOWN. FACTORY MOUNT A 4" X 4" X 2" JUNCTION BOX ON THE MIDDLE OF THE END WALL OF THE RTU SUPPLY AIR AND RETURN PLENUMS. EXTEND ¾" CONDUIT TO A COMMON JUNCTION BOX IN THE VFD VESTIBULE. SMOKE DETECTOR SHALL BE FURNISHED AND INSTALLED BY THE RTU MANUFACTURER. CONTRACTOR SHALL COORDINATE WITH THE VA CONTRACTING OFFICER TO PROVIDE SMOKE DETECTORS SIMILAR TO THE SMOKE DETECTORS USED IN THE HOSPITAL. ALL REQUIRED WIRING SHALL BE FURNISHED, INSTALLED AND CONNECTED BY THE CONTRACTOR.
4. ROUTE COOLING COIL CONDENSATE DRAIN DOWN THROUGH ROOF. PROVIDE TRAP. SEE DETAIL 4/H6.1. ROUTE TRAP DISCHARGE AT FLOOR DRAIN IN MECHANICAL ROOM BELOW.
5. EXTEND CHILLED WATER AND HEATING HOT WATER PIPING INTO RTU VESTIBULE FROM MECHANICAL EQUIPMENT ROOM BELOW. SEE COIL PIPING DETAIL. PIPING VESTIBULE SHALL BE FACTORY ASSEMBLED BY RTU MANUFACTURER.
6. PATCH AND REPAIR ALL ROOFING AFFECTED BY THIS WORK. COORDINATE WITH VA PRIOR TO THIS EFFORT IN CASE EXISTING WARRANTIES ARE IN EFFECT. ALL SURFACES SHALL BE SEALED WATERTIGHT.

5 R.F.I. #10

SHEET NOTES:

1 CONTRACTOR SHALL PATCH AND REPAIR EXTERIOR WALL TO MATCH EXISTING WHERE THE LOUVER WAS REMOVED. PRIME AND PAINT TO MATCH EXISTING.

BLDG 650 FIRST FLOOR PARTIAL ROOF PLAN (WEST)

SCALE: 1/4" = 1'-0"

NORTH

SCALE: 3/4"=1'-0" SCALE: 1/2"=1'-0" SCALE: 1/4"=1'-0" SCALE: 1/8"=1'-0"

011408

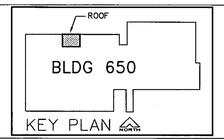

K.F. DAVIS ENGINEERING, INC
530 LA GONDA WAY, SUITE E
DANVILLE, CA 94526

Revisions: 1 DATED 11/10/08; 2 DATED 11/19/08; 3 DATED 07/14/09; 4 DATED 12/05/2011; 5 AS BUILTS FOR AHU 1 08/14/14	Drawing Title: FIRST FLOOR PARTIAL ROOF PLAN (WEST)	Project Title: BLDG 650 REPLACE AIR HANDLERS 1 THRU 4, 7 AND 9 – 15	Date: 12/05/11
			Project No.: 612A4-07-342
Approved:	Approved: Medical Center Director	Drawn: RMK	Building Number:
Approved:	Approved: Chief, Engineering Service	Checked: KL	Location: MATHER VAMC MATHER CALIFORNIA
			DRAWING No. H3.2 Dwg. Of

Department of Veterans Affairs

SHEET NOTES:

1. DUCT THRU ROOF. SEE 7/H6.1. CUT AND PATCH ROOF WATER TIGHT.
2. EXTERNALLY INSULATE DUCTWORK ON ROOF, PROVIDE DUCT SUPPORTS PER 10/H6.1.
3. MOUNT AHU ON LEVEL ROOF CURB, SEE 6/H6.1. PROVIDE CONDENSATE DRAIN PER 4/H6.1 AND EXTEND TO APPROVED LOCATION; SEE 5 & 9/H6.1 FOR COIL PIPING DETAIL.
4. COORDINATE RELOCATION OF ELECTRICAL ITEMS (DISCONNECTS, MOTOR STARTERS) WITH THIS PLAN. (1)

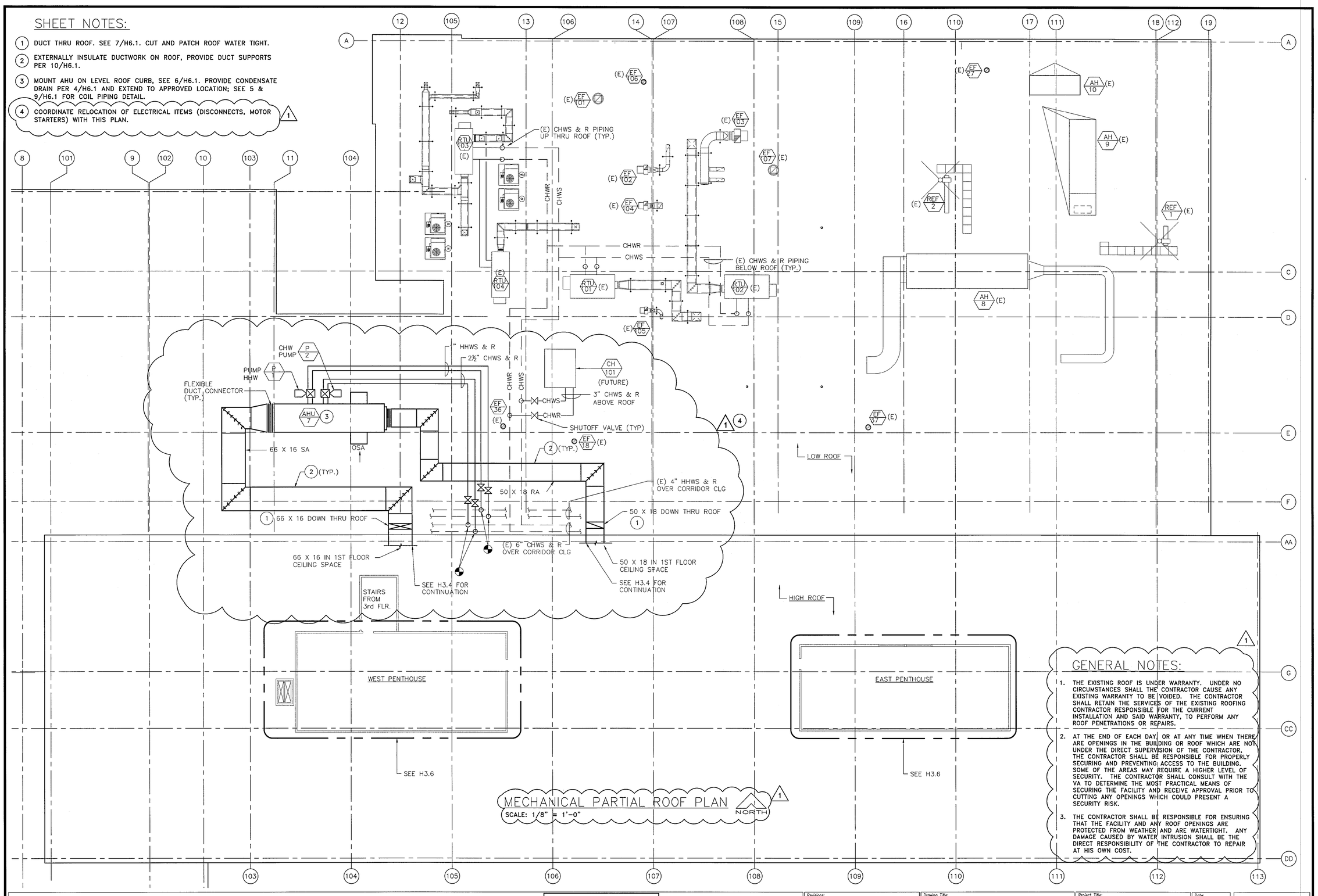

MECHANICAL PARTIAL ROOF PLAN (1)

SCALE: 1/8" = 1'-0"

NORTH

GENERAL NOTES:

1. THE EXISTING ROOF IS UNDER WARRANTY. UNDER NO CIRCUMSTANCES SHALL THE CONTRACTOR CAUSE ANY EXISTING WARRANTY TO BE VOIDED. THE CONTRACTOR SHALL RETAIN THE SERVICES OF THE EXISTING ROOFING CONTRACTOR RESPONSIBLE FOR THE CURRENT INSTALLATION AND SAID WARRANTY, TO PERFORM ANY ROOF PENETRATIONS OR REPAIRS.
2. AT THE END OF EACH DAY, OR AT ANY TIME WHEN THERE ARE OPENINGS IN THE BUILDING OR ROOF WHICH ARE NOT UNDER THE DIRECT SUPERVISION OF THE CONTRACTOR, THE CONTRACTOR SHALL BE RESPONSIBLE FOR PROPERLY SECURING AND PREVENTING ACCESS TO THE BUILDING. SOME OF THE AREAS MAY REQUIRE A HIGHER LEVEL OF SECURITY. THE CONTRACTOR SHALL CONSULT WITH THE VA TO DETERMINE THE MOST PRACTICAL MEANS OF SECURING THE FACILITY AND RECEIVE APPROVAL PRIOR TO CUTTING ANY OPENINGS WHICH COULD PRESENT A SECURITY RISK.
3. THE CONTRACTOR SHALL BE RESPONSIBLE FOR ENSURING THAT THE FACILITY AND ANY ROOF OPENINGS ARE PROTECTED FROM WEATHER AND ARE WATERTIGHT. ANY DAMAGE CAUSED BY WATER INTRUSION SHALL BE THE DIRECT RESPONSIBILITY OF THE CONTRACTOR TO REPAIR AT HIS OWN COST.

BLDG 650
KEY PLAN

K.F. DAVIS ENGINEERING, INC
530 LA GONDA WAY, SUITE E
DANVILLE, CA 94526

Revisions: (1) RFI 097 09/07/10	Drawing Title: MECHANICAL ROOF PLANS EAST	Project Title: BLDG 650 REPLACE AIR HANDLERS 1 THRU 4, 7 AND 9 – 15	Date: 12/05/11
			Project No.: 612A4-07-342
Approved:	Approved: Medical Center Director	Drawn: RMK	Building Number:
Approved:	Approved: Chief, Engineering Service	Checked: KL	Location: MATHER VAMC MATHER CALIFORNIA
			DRAWING No. H3.3 Dwg. Of

Department of Veterans Affairs

011408

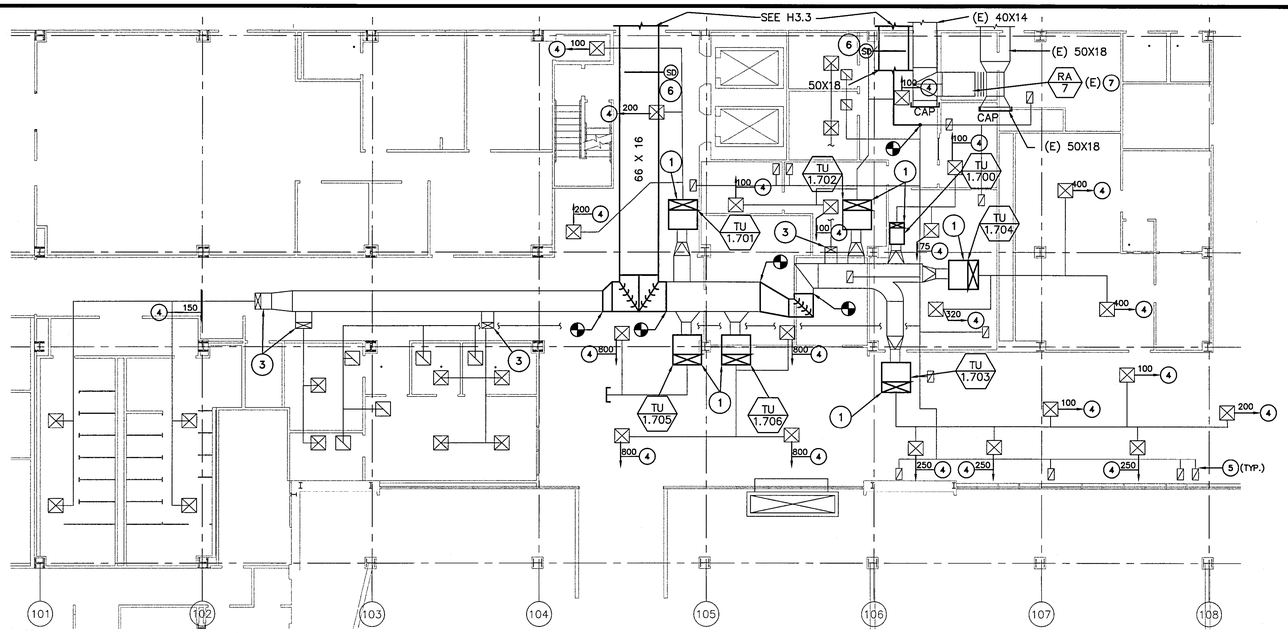

1ST FLOOR MECH PLAN

SCALE: 1/8" = 1'-0"

NORTH

GENERAL NOTES:

1. CUT AND PATCH AS REQ'D FOR INSTALLATION OF WORK, PATCH TO MATCH (E) ADJACENT MATERIALS AND FINISHES.
2. SEE H1.1 FOR PHASING NOTES.

SHEET NOTES:

1. INSTALL (N) VAV BOX IN SAME LOCATION AS HHW COIL, CONN. TO (E) HHWS & R PIPING & (E) DUCTWORK.
2. NOT USED
3. (E) VAV BOX TO REMAIN (INSTALLED AS A PART OF PHASE II PROJECT).
4. BALANCE (E) DIFFUSER OR GRILLE TO (N) CFM SHOWN.
5. BALANCE EXH. OR RETURN IN EACH ROOM TO EQUAL SUPPLY CFM.
6. PROVIDE DUCT MOUNTED SMOKE DETECTOR. MAKE & MODEL TO MATCH (E) FIRE ALARM DERVICES. CONTRACTOR TO PROVIDE CONTROL POWER AS NECESSARY.
7. PRIOR TO STARTING WORK, AIR BALANCE CONTRACTOR SHALL MEASURE & RECORD RA-7 SYSTEM AIR QUANTITIES & PROVIDE REPORT TO VA; AFTER WORK IS COMPLETE, REBALANCE RA-7 SYSTEM TO AIR QUANTITIES RECORDED PRIOR TO CONSTRUCTION IN THOSE AREAS THAT REMAIN; PROVIDE (N) BELTS AND SHEAVE IN ORDER TO OBTAIN NEW TOTAL AIRFLOW FOR RA-7.

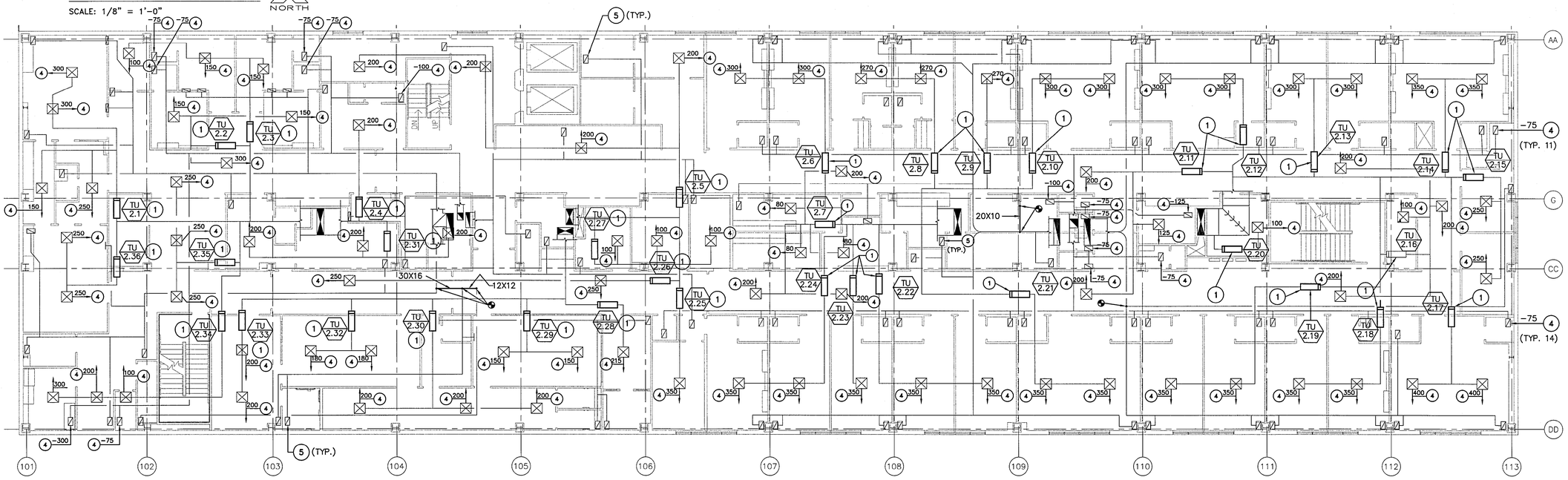

2ND FLOOR MECH PLAN

SCALE: 1/8" = 1'-0"

NORTH

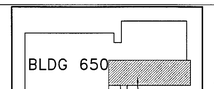

KEY PLAN

K.F. DAVIS ENGINEERING, INC
530 LA GONDA WAY, SUITE E
DANVILLE, CA 94526

Revisions: 1 DATED 11/10/08; 2 DATED 11/19/08; 3 DATED 07/14/09; 4 DATED 12/05/2011	Drawing Title: MECHANICAL 1ST FLR AND 2ND FLR PLAN	Project Title: BLDG 650 REPLACE AIR HANDLERS 1 THRU 4, 7 AND 9 – 15	Date: 12/05/11
			Project No.: 612A4-07-342
Approved:	Approved: Medical Center Director	Drawn: RMK	Building Number:
Approved:	Approved: Chief, Engineering Service	Checked: KL	Location: MATHER VAMC MATHER CALIFORNIA
			DRAWING No. H3.4 Dwg. Of

Department of Veterans Affairs

011408

GENERAL NOTES:

1. CUT & PATCH AS REQUIRED FOR INSTALLATION OF WORK, PATCH TO MATCH (E) ADJACENT MATERIALS & FINISHES
2. SEE H1.1 FOR PHASING NOTES.

SHEET NOTES:

1. INSTALL (N) VAV BOX IN SAME LOCATION AS HHW COIL, CONN. TO (E) HHWS & R PIPING & (E) DUCTWORK, REPLACE (E) THERMOSTAT WITH (N).
2. SEE 6/H6.2.
3. CONNECT TO (E) 2" HHWS&R IN 3RD FLOOR CEILING & EXTEND UP TO AHU-14
4. BALANCE (E) DIFFUSER OR GRILLE TO (N) CFM SHOWN.
5. BALANCE EXH. OR RETURN IN EACH ROOM TO EQUAL SUPPLY CFM.
6. PROVIDE DUCT MOUNTED SMOKE DETECTOR. MAKE & MODEL TO MATCH (E) FIRE ALARM DERVICES. CONTRACTOR TO PROVIDE CONTROL POWER AS NECESSARY.

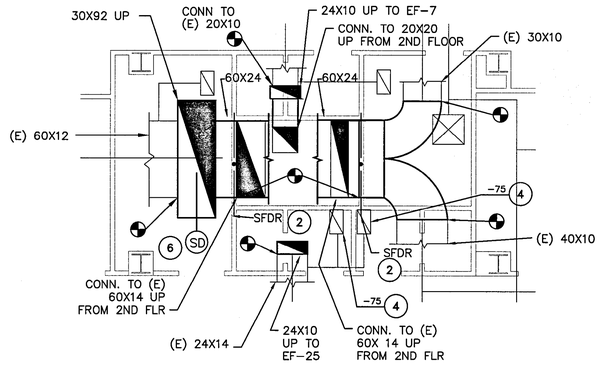

PARTIAL ENLARGED MECH PLAN

SCALE: 1/4" = 1'-0"

NORTH

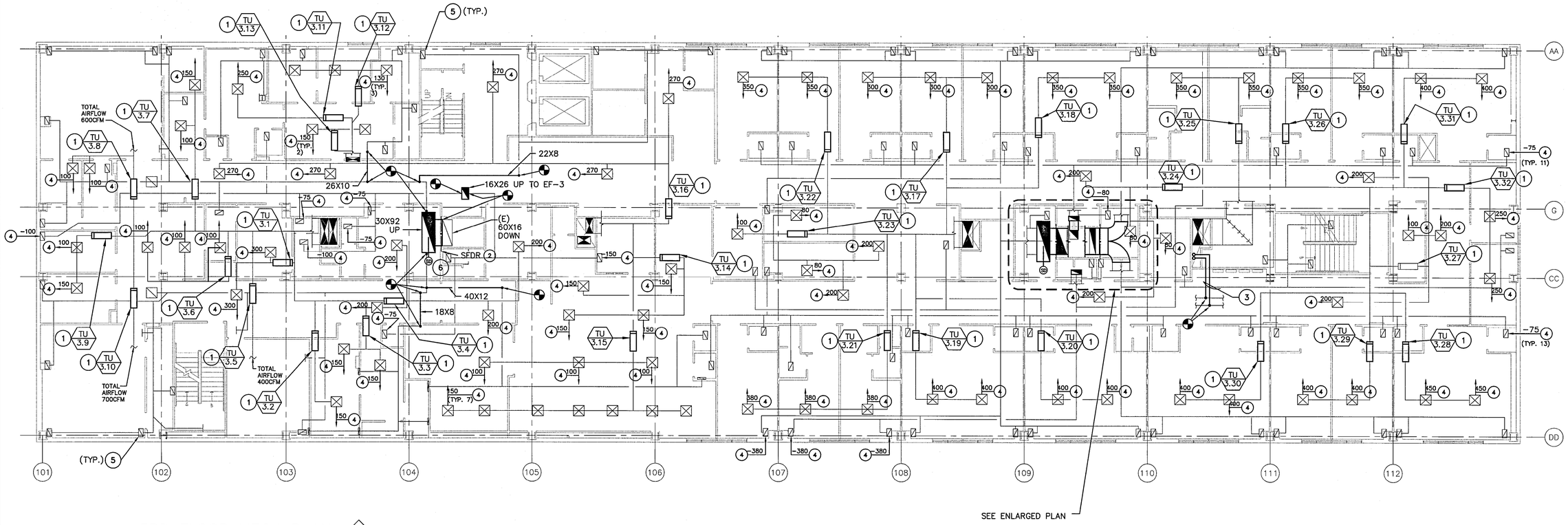

3RD FLOOR MECH PLAN

SCALE: 1/8" = 1'-0"

NORTH

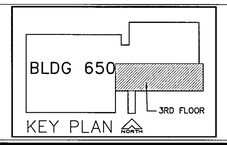

K.F. DAVIS ENGINEERING, INC
530 LA GONDA WAY, SUITE E
DANVILLE, CA 94526

Revisions: 1 DATED 11/10/08; 2 DATED 11/19/08; 3 DATED 07/14/09; 4 DATED 12/05/2011	Drawing Title: MECHANICAL 3RD FLOOR PLAN	Project Title: BLDG 650 REPLACE AIR HANDLERS 1 THRU 4, 7 AND 9 – 15	Date: 12/05/11
Approved:	Approved: Medical Center Director	Drawn: RMK	Project No.: 612A4-07-342
Approved:	Approved: Chief, Engineering Service	Checked: KL	Building Number:
		Location: MATHER VAMC MATHER CALIFORNIA	DRAWING No. H3.5 Dwg. Of

Department of Veterans Affairs

011408

GENERAL NOTES:

1. COORDINATE STRUCTURAL WORK FOR (N) AHU WITH S-DWGS.
2. SEAL (E) DUCTWORK AIR TIGHT.
3. PATCH WALLS, FLOORS, ROOF TO MATCH EXISTING.
4. SEE H1.1 FOR PHASING NOTES

SHEET NOTES:

1. CONN. TO (E) CHWS & R PIPING, PROVIDE CIRCULATING PUMP P-2, SEE DETAIL ON H6.1.
2. CONN. TO (E) HHWS & R PIPING, PROVIDE CIRCULATING PUMP P-1, SEE DETAIL ON H6.1.
3. PROVIDE BACKDRAFT DAMPERS & WEATHER CAP; SEAL ROOF OPENING WATER TIGHT; COORDINATE (N) ROOF PENETRATIONS WITH STRUCTURAL.
4. MOUNT UNIT ON (N) 6" HIGH CONCRETE HOUSE KEEPING PAD WITH SEISMICALLY RESTRAINED SPRING VIBRATION ISOLATORS; MAINTAIN MFR RECOMMENDED SERVICE ACCESS CLEARANCES.
5. SUSPEND FAN FROM (E) STRUCTURE WITH THREADED ROD AND SEISMICALLY RESTRAINED SPRING VIBRATION ISOLATORS.
6. CONN. TO AHU-14 SIMILAR TO AHU-10 (SEE WEST PENTHOUSE PLAN)
7. EXTEND 2" HHWS & R UP FROM (E) HHWS & R PIPING IN 3RD FLOOR CEILING, AND OVER TO AIR HANDLER.
8. EXTEND CONDENSATE DRAIN FULL SIZE FROM UNIT TO OVER (E) FLOOR DRAIN.
9. EXTERNALLY INSULATE S.A. DUCTWORK IN MECHANICAL ROOM.
10. INSTALL DUCTWORK HIGH OVER AHU & CONN. TO (E) DUCTWORK.
11. OUTSIDE AIR ECONOMIZER.
12. RELIEF AIR DUCTED THRU WALL, PROVIDE BACKDRAFT DAMPER, BIRDSCREEN & WEATHER HOOD.
13. PROVIDE DUCT MOUNTED SMOKE DETECTOR. MAKE & MODEL TO MATCH (E) FIRE ALARM DERVICES. CONTRACTOR TO PROVIDE CONTROL POWER AS NECESSARY.
14. COORDINATE DUCT PENETRATION THRU FLOOR WITH STRUCTURAL.

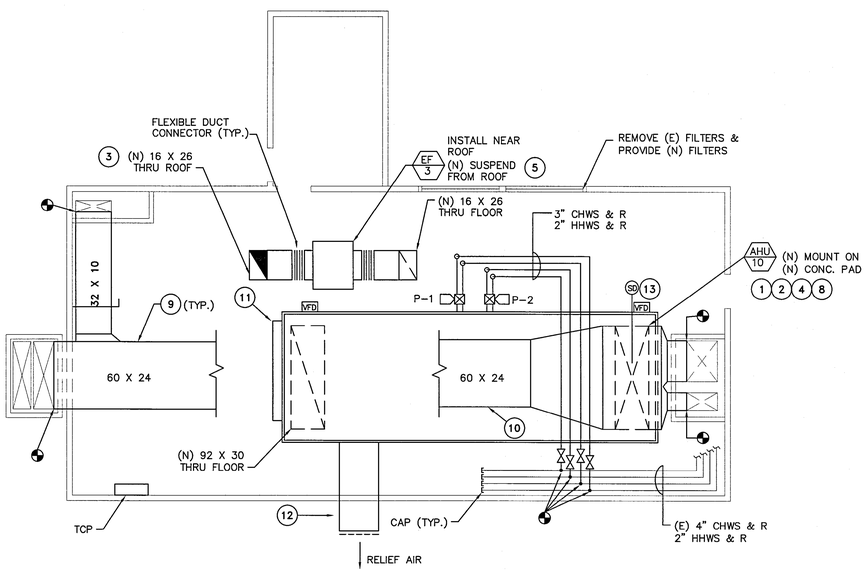

ROOF MECH PLAN PENTHOUSE (WEST)
SCALE: 1/4" = 1'-0"
NORTH

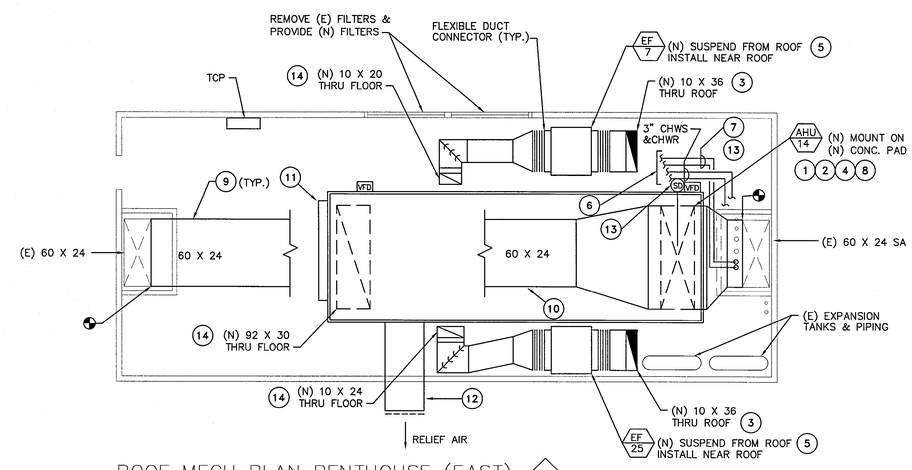

ROOF MECH PLAN PENTHOUSE (EAST)
SCALE: 1/4" = 1'-0"
NORTH

SCALE: 3/4"=1'-0"
SCALE: 1/2"=1'-0"
SCALE: 1/4"=1'-0"
SCALE: 1/8"=1'-0"
011108

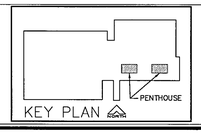

KEY PLAN

K.F. DAVIS ENGINEERING, INC
530 LA GONDA WAY, SUITE E
DANVILLE, CA 94526

Revisions: 1 DATED 11/10/08; 2 DATED 11/19/08; 3 DATED 07/14/09; 4 DATED 12/05/2011	Drawing Title: MECHANICAL PLAN PENTHOUSE	Project Title: BLDG 650 REPLACE AIR HANDLERS 1 THRU 4, 7 AND 9 – 15	Date: 12/05/11; Project No.: 612A4-07-342
Approved:	Approved: Medical Center Director	Drawn: RMK; Building Number:	DRAWING No. H3.6
Approved:	Approved: Chief, Engineering Service	Checked: KL; Location: MATHER VAMC MATHER CALIFORNIA	Dwg. Of

Department of Veterans Affairs

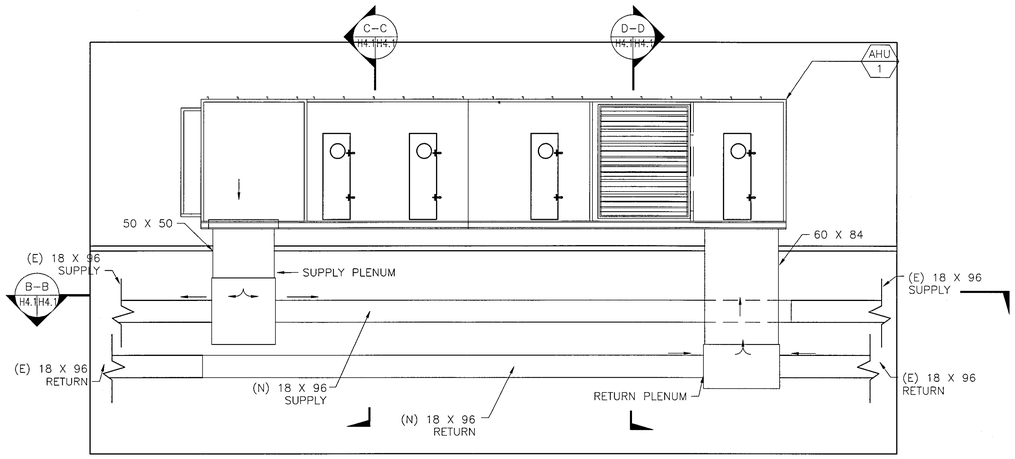

A-A H3.2|H4.1 SECTION A-A
SCALE: 1/8" = 1'-0"

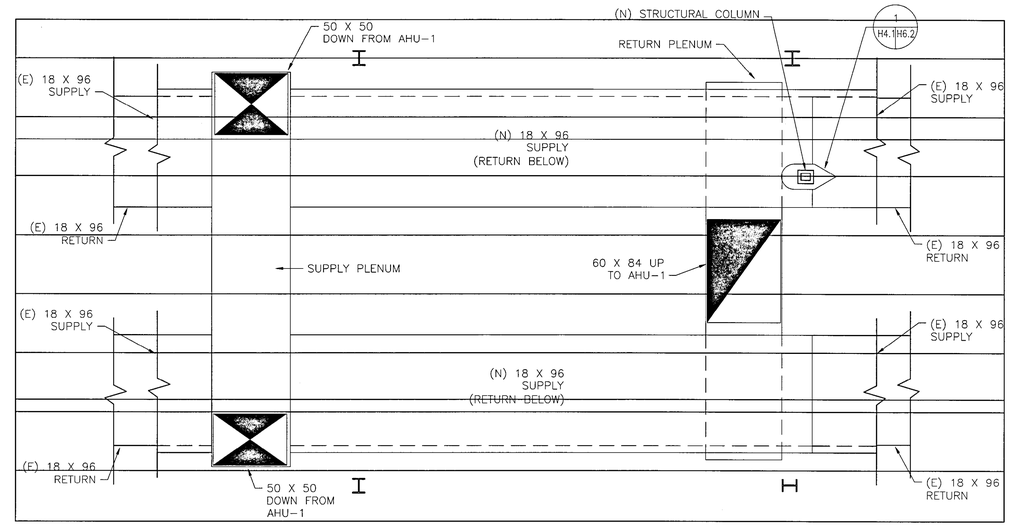

B-B H4.1|H4.1 PLAN B-B
SCALE: 1/8" = 1'-0"

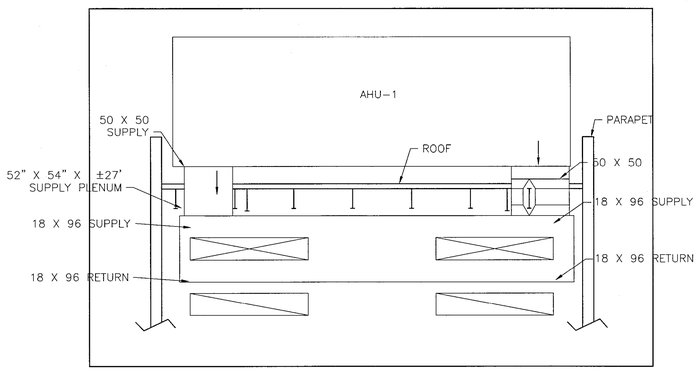

C-C H4.1|H4.1 SECTION C-C
SCALE: 1/8" = 1'-0"

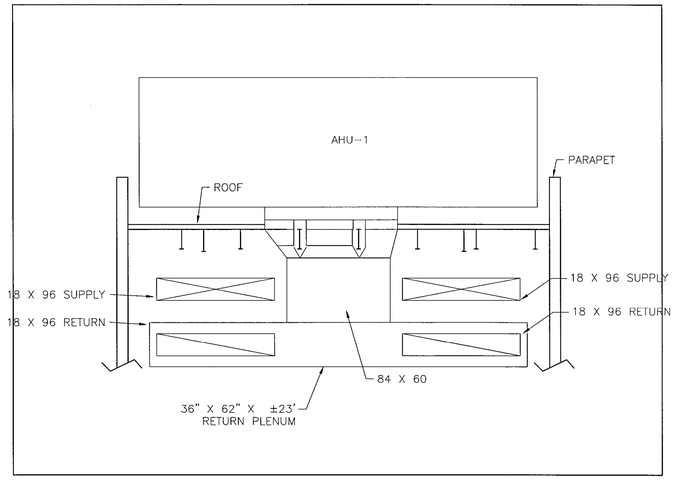

D-D H4.1|H4.1 SECTION D-D
SCALE: 1/8" = 1'-0"

SCALE: 3/4"=1'-0" 1/2"=1'-0" 1/4"=1'-0" 1/8"=1'-0"

011408

K.F. DAVIS ENGINEERING, INC
530 LA GONDA WAY, SUITE E
DANVILLE, CA 94526

Revisions: 1 DATED 11/10/08; 2 DATED 11/19/08; 3 DATED 07/14/09; 4 DATED 12/05/2011	Drawing Title: SECTIONS	Project Title: BLDG 650 REPLACE AIR HANDLERS 1 THRU 4, 7 AND 9 – 15	Date: 12/05/11
			Project No.: 612A4-07-342
Approved:	Approved: Medical Center Director	Drawn: RMK	Building Number:
Approved:	Approved: Chief, Engineering Service	Checked: KL	Location: MATHER VAMC MATHER CALIFORNIA
			DRAWING No. H4.1 Dwg. Of

Department of Veterans Affairs

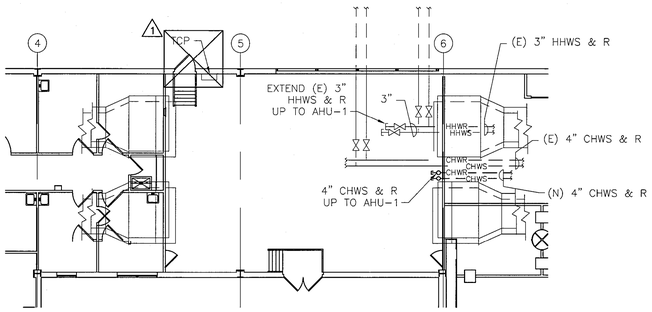

BLDG 650 MECH ROOM PIPING PLAN

SCALE: 1/8" = 1'-0"

MECHANICAL ROOM PIPING PLAN NOTES:

1. **ROUTE CHILLED WATER AND HEATING HOT WATER ACROSS MECHANICAL ROOM CEILING AND EXTEND THROUGH ROOF TO NEW ROOF TOP UNIT. COORDINATE EXACT LOCATION OF ROOF PENETRATIONS WITH ROOF TOP UNIT MANUFACTURER**
2. **CONNECT TO 4" CHWS & R PIPING IN (E) MECHANICAL ROOM. EXTEND (N) PIPING UP THRU ROOF.**
3. **CONNECT TO (E) 3" HHWS AND 4" HHWR PIPING AND EXTEND (N) PIPING UP THRU ROOF.**

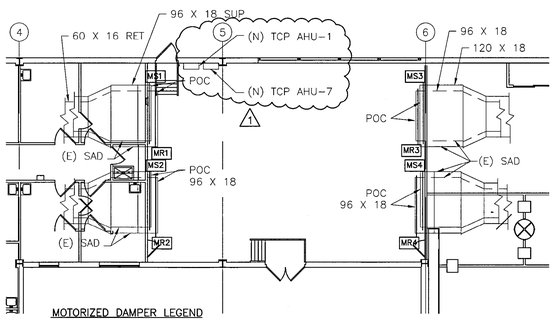

MOTORIZED DAMPER LEGEND

MS1— MOTORIZED DAMPER (E) ZONE #1 SUPPLY

MR2— MOTORIZED DAMPER (E) ZONE #2 RETURN

CONTROL DAMPER & DUCT CONNECTION POINT PLAN

SCALE: 1/8" = 1'-0"

SCALE: 3/4"=1'-0" SCALE: 1/2"=1'-0" SCALE: 1/4"=1'-0" SCALE: 1/8"=1'-0"

111008

BLDG 650

KEY PLAN

K.F. DAVIS ENGINEERING, INC
530 LA GONDA WAY, SUITE E
DANVILLE, CA 94526

Revisions: 1 DATED 11/10/08; 2 DATED 11/19/08; 3 DATED 07/14/09; 4 DATED 12/05/2011	Drawing Title: MECHANICAL ROOM PIPING AND CONTROL DAMPER PLAN	Project Title: BLDG 650 REPLACE AIR HANDLERS 1 THRU 4, 7 AND 9 – 15	Date: 12/05/11
Approved:	Approved: Medical Center Director	Drawn: RMK	Project No.: 612A4-07-342
Approved:	Approved: Chief, Engineering Service	Checked: KL	Building Number:
		Location: MATHER VAMC MATHER CALIFORNIA	DRAWING No. H4.2 Dwg. Of

Department of Veterans Affairs

SEQUENCE OF OPERATION:

A. GENERAL UNIT OPERATION
1. VFD POWERED FANS
   a. VARIABLE FREQUENCY DRIVES (VFD) SHALL START AT THE MINIMUM SPEED SETTING AND SHALL RAMP TO THE CONTROL POINT. UNLESS OTHERWISE NOTED, THE VFD SHALL RAMP UP AND DOWN FULL SCALE OVER 180 (FA) SECONDS. THE VFD SHALL NOT BE ALLOWED TO OPERATE AT LESS THAN 15 HZ. IF AN ELECTRICAL DISCONNECT IS CONNECTED BETWEEN THE VFD AND THE EQUIPMENT, THE VFD SHALL NOT BE ALLOWED TO OPERATE IF THE DISCONNECT IS OPEN.
   b. SEE SPECIFICATION SECTIONS 15763 AND 15902 FOR ADDITIONAL VFD REQUIREMENTS.

B. SUPPLY AIR SYSTEM – CONTROL SEQUENCE
1. AHU-1 IS ROOF TOP AIR HANDLING UNIT. THE UNIT CONSISTS OF AN OUTDOOR AIR INTAKE WITH ECONOMIZER CONTROLS AND (2) NON-REDUNDANT RETURN FANS, MIXED AIR/FILTER SECTION, COOLING COIL SECTION, HOT WATER PRE-HEAT COIL SECTION AND (2) NON-REDUNDANT SUPPLY FANS.
   a. THE UNIT SHALL BE PLACED IN THE START-UP MODE BY THE EXISTING ECC.
   b. THE OUTDOOR AIR DAMPER SHALL BE CLOSED.
2. SYSTEM IS DESIGNED AS HEATING-COOLING, SINGLE DUCT, VARIABLE AIR VOLUME REHEAT SYSTEM WHERE REHEAT IS PROVIDED BY VAV TERMINAL UNIT HOT WATER REHEAT COILS.
3. SUPPLY AND RETURN FANS ARE INTERLOCKED TOGETHER.
4. SUPPLY AND RETURN FAN START/STOP (AHU-1)
   a. AHU-1 SUPPLY AND RETURN FANS SHALL BE STARTED AND STOPPED THROUGH E.C.C. BY A SINGLE START OR STOP COMMAND INITIATED MANUALLY BY BUILDING OPERATING PERSONNEL. UPON INITIATION OF A START COMMAND, BOTH FANS SHALL BE STARTED AUTOMATICALLY IN A SEQUENCE AS SPECIFIED.
   b. AHU-1 IS POWERED BY ENGINE GENERATOR SET WHEN THE AHU IS OPERATING IN EMERGENCY MODE.
5. GENERAL:
   a. NEW CONTROLS SHALL INCLUDE ALL COMPONENTS AS NECESSARY TO ACCOMMODATE SEQUENCE OF OPERATION. PROVIDE A TEMPERATURE CONTROL PANEL (TCP). LOCATE THE PANEL IN THE (E) FAN ROOM BELOW THE UNIT. TCP SHALL CONTAIN ALL CONTROLLERS, TRANSFORMERS AND RELAYS. CONTRACTOR SHALL PROVIDE DEVICES AND CONNECTIONS REQUIRED TO PRODUCE INDICATED SEQUENCE OF OPERATION. FURNISH ALL RELAYS, SENSORS, WIRING, TRANSFORMERS, CONTROL LOOPS AND OTHER CONTROL DEVICES NECESSARY TO MEET THE INTENT OF THE SEQUENCE OF OPERATION.
   b. H-O-A SWITCH SHALL BE KEPT IN THE "AUTO" POSITION. "HAND" AND "OFF" POSITIONS SHALL BE USED ONLY FOR MAINTENANCE. WHEN THE UNIT IS "OFF" D-1 AND D-2 SHALL BE FULLY CLOSED. WHEN THE UNIT IS "ON" D-2 AND D-1 SHALL MODULATE IN ACCORDANCE WITH THE FOLLOWING SEQUENCE:
6. SUPPLY FAN VOLUME CONTROL
   a. SYSTEM VOLUME CONTROL WILL BE ACCOMPLISHED UTILIZING VARIABLE SPEED DRIVES. PROVIDE 4-20 MA DC OR 0-10 VDC STATIC PRESSURE CONTROL SIGNAL TO MODULATE FAN SPEED AS SPECIFIED HEREIN. RATE OF CHANGE OF FAN SPEED SHALL BE ADJUSTABLE. FOUR AVERAGING TYPE SUPPLY DUCT PRESSURE SIGNALS SHALL BE USED FOR CONTROL. SEE SHEET H4.2 FOR LOCATION OF DUCT SP SENSORS AND TRANSMITTERS. PRESSURE SETPOINTS SHALL BE 1.0" W.C. (FA). THIS MINIMUM PRESSURE REQUIRED SHALL BE DETERMINED BY THE TEST-ADJUST-BALANCE CONTRACTOR DURING THE AIR BALANCE. SEE SPECIFICATION SECTION 15980, TESTING, ADJUSTING AND BALANCING. IF ANY OF THE DUCT PRESSURES ARE BELOW SETPOINT, SUPPLY DUCT PRESSURE SHALL BE ALLOWED TO RISE ABOVE SETPOINT IF NEEDED TO RAISE THE OTHER PRESSURE TO MEET SETPOINT.
   b. ARRANGE CONTROLS SO THAT AHU-1 WILL START ON LOW SPEED. ON FAILURE OF FAN VOLUME CONTROL SIGNAL, FAN SHALL GO TO LOW SPEED AND STOP.
   c. PROVIDE ALARM INDICATION AT E.C.C. FOR VFD FAULT CONDITION. BOTH N.O. AND N.C. CONTACTS SHALL BE PROVIDED WITH VFD. ON FAILURE OF A VFD, THE ASSOCIATED SUPPLY FAN SHALL GO TO LOW SPEED AND STOP.
   d. VFD'S SHALL RAMP UP AND DOWN FULL SCALE OVER 180 SECONDS (FA).
7. MAIN SUPPLY DUCT PRESSURE CONTROL:
   a. STATIC PRESSURE IN THE SUPPLY DUCT SHALL BE CONTROLLED BY NEW STATIC PRESSURE SENSOR/TRANSMITTERS; STATIC PRESSURE SENSOR/TRANSMITTERS SHALL BE LOCATED WHERE INDICATED ABOVE.
   b. STATIC PRESSURE SENSOR/TRANSMITTER SHALL MODULATE SUPPLY FAN TO MAINTAIN MAIN STATIC PRESSURE SETPOINT.
   c. THE STATIC PRESSURE CONTROL SETPOINTS SHALL BE 1.0" W.G. (FA) AS DETERMINED BY THE TEST-ADJUST-BALANCE CONTRACTOR DURING THE AIR BALANCE.
8. MISCELLANEOUS SUPPLY FAN CONTROL:
   a. VFD CURRENT INPUT TO PROVIDE FAN STATUS INDICATION TO E.C.C. CURRENT FUNCTION SHALL BE PROVIDED WITH VFD. PROVIDE ALARM INDICATION TO E.C.C. WHENEVER CURRENT LEVEL IS BELOW 10% OF MAXIMUM (FA) FOR 20 SECONDS (FA) OF START COMMAND. FAN SHALL THEN BE LOCKED OUT UNTIL RESET THROUGH E.C.C. BY BUILDING OPERATING PERSONNEL. ON FAILURE OF AN OPERATING FAN AS SENSED BY THE ASSOCIATED SWITCH INDICATION, THE SAME SEQUENCE SHALL OCCUR.
9. RETURN FAN VOLUME CONTROL:
   a. AHU-1 RETURN FAN VOLUME CONTROL WILL BE ACCOMPLISHED UTILIZING VARIABLE SPEED DRIVES. SEE PARAGRAPH C.6 BELOW
   b. ARRANGE CONTROLS SO THAT FAN WILL START ON LOW SPEED. ON FAILURE OF FAN VOLUME CONTROL SIGNAL, FAN SHALL GO TO LOW SPEED AND STOP.
   c. PROVIDE ALARM INDICATION AT E.C.C. FOR VFD FAULT CONDITION. BOTH N.O. AND N.C CONTACTS SHALL BE PROVIDED WITH VFD, VFD SHALL RAMP UP AND DOWN FULL SCALE OVER 180 SECONDS.
10. RETURN FAN CONTROL:
   a. PROVIDE CURRENT INPUT TO PROVIDE FAN STATUS INDICATION TO E.C.C. CURRENT FUNCTION WILL BE PROVIDED WITH VFD. PROVIDE ALARM INDICATION TO E.C.C. WHENEVER CURRENT LEVEL IS BELOW 10% OF MAXIMUM (FA) FOR 20 SECONDS (FA) OF START COMMAND. FAN SHALL THEN BE LOCKED OUT UNTIL RESET THROUGH E.C.C. BY BUILDING OPERATING PERSONNEL. ON FAILURE OF RETURN FAN AS SENSED BY THE ASSOCIATED CURRENT INDICATION, THE SAME SEQUENCE SHALL OCCUR.

C. AHU SEQUENCE OF OPERATION
1. THE SUPPLY AND RETURN FANS SHALL OPERATE CONTINUOUSLY.
2. WHENEVER OUTSIDE AIR DRY-BULB TEMPERATURE IS ABOVE 70° (FA), THE CONTROL SHALL OVERRIDE MIXED AIR CONTROLLER AND FULLY OPEN THE RETURN AIR DAMPER D-2 AND SET THE OUTSIDE AIR DAMPER D-1 TO MAINTAIN MINIMUM OUTDOOR AIR.
   a. THE COOLING COIL CONTROL VALVE SHALL MODULATE TO CONTROL SET POINT. THE SECONDARY CHILLED WATER PUMP SHALL START WITH THE SIGNAL TO MODULATE THE CONTROL VALVE. WHEN CHILLED WATER IS NOT NEEDED, THE PUMP SHALL STOP.
3. WHENEVER OUTSIDE AIR DRY-BULB TEMPERATURE IS BETWEEN 52°F (FA) AND 70° (FA), THE ECONOMIZER CONTROL SHALL MAINTAIN SETPOINT BY MODULATING DAMPERS D-1 AND D-2.
   a. THE TCP SHALL MAINTAIN THE SUPPLY AIR TEMPERATURE SENSED BY T-1.
4. WHEN THE TEMPERATURE OF THE OUTSIDE AIR, SENSED BY T-2 IS BELOW THE SUPPLY AIR TEMPERATURE, SENSED BY T-1, DAMPERS D-1 AND D-2 SHALL MODULATE TO MAINTAIN THE SCHEDULED SUPPLY AIR TEMPERATURE.
5. PRE-HEAT COIL
   a. WHEN THE OUTDOOR AIR TEMPERATURE IS BELOW 55°F (FA), THE PRE-HEAT COIL VALVE SHALL MODULATE TO MAINTAIN A PREHEAT COIL DISCHARGE AIR TEMPERATURE OF 55°F (FA). THE SECONDARY HOT WATER PUMP SHALL START WITH THE SIGNAL TO MODULATE THE HOT WATER CONTROL VALVE. WHEN HOT WATER IS NOT NEEDED, THE SECONDARY HOT WATER PUMP SHALL STOP. THE COOLING COIL CHILLED WATER CONTROL VALVE SHALL CLOSE.
6. AIR FLOW CONTROL
   a. THE SUPPLY AIR FLOW SHALL BE CONTROLLED BY THE TCP MODULATING THE SUPPLY FAN VARIABLE SPEED MOTOR CONTROLLER (VFD-2a & VFD-2b) TO MAINTAIN 1.0"W.C. (37 MM) OF DUCT STATIC PRESSURE (FIELD ADJUSTABLE). SENSED BY SP-1, SP-2, SP-3 AND SP-4. SEE ABOVE FOR LOCATION OF THE DUCT STATIC PRESSURE SENSORS/TRANSMITTERS..
   b. THE TCP, USING TOTAL SUPPLY AIR AND RETURN AIR FLOW SIGNALS, SHALL RESET THE RETURN AIR FAN VFDS TO MAINTAIN A CONSTANT AIR FLOW DIFFERENCE BETWEEN THE SUPPLY AIR AND THE RETURN AIR EQUAL TO MINIMUM OUTSIDE AIR.
   c. THE TCP, USING HIGH PRESSURE SENSOR SP-5 LOCATED AT THE SUPPLY FAN DISCHARGE, SHALL PREVENT THE SUPPLY FAN FROM DEVELOPING OVER 5" (125 MM) OF STATIC PRESSURE (FIELD ADJUSTABLE). IF STATIC PRESSURE AT SP-5 DOES EXCEED 5" (125 MM) THE SUPPLY AIR FAN SHALL STOP.
7. FREEZE PROTECTION
   IF THE AIR TEMPERATURE AS SENSED BY T-5 FALLS BELOW 45°F (FA) (7°C), AN ALARM SIGNAL SHALL INDICATE AT THE TCP AND ECC. IF THIS TEMPERATURE FALLS BELOW 40°F (FA) (4.4°C), THE SUPPLY AND RETURN FANS SHALL SHUT DOWN AND A CRITICAL ALARM SHALL INDICATE AT THE TCP AND ECC.
8. AUTOMATIC SHUTDOWN/RESTART
   WHEN SMOKE IS DETECTED BY EITHER SUPPLY OR RETURN AIR SMOKE DETECTORS, THE SUPPLY AND RETURN FANS SHALL SHUT "OFF" AND AN ALARM SIGNAL SHALL BE TRANSMITTED TO THE FIRE ALARM SYSTEM. DAMPER D-2 IN THE RETURN DUCT SHALL CLOSE. SUPPLY AND RETURN FANS SHALL RESTART AND DAMPERS D-2 SHALL OPEN WHEN THE FIRE ALARM CIRCUIT IS RESET.
9. EMERGENCY CONSTANT SPEED OPERATION
   UPON FAILURE OF THE VFD, THE SUPPLY AND RETURN FANS SHALL BE STARTED/STOPPED MANUALLY AT THE TCP OR ECC THROUGH THE BY-PASS STARTER. FANS SHALL THEN BE OPERATED AT CONSTANT SPEED.

D. MISCELLANEOUS CONTROLS:
   PROVIDE INDICATIONS AND ALARM CONDITIONS TO ECC FOR LOW VFD MOTOR CURRENT AND HIGH FILTER PRESSURE DROP (FA).

NOTE: TCP (TEMPERATURE CONTROL PANEL) REFERS TO THE CONTROL CONTRACTOR NEW CONTROL PANEL LOCATED IN THE FAN ROOM BELOW THE ROOF TOP UNIT.

SEQUENCE OF OPERATION: (EMERGENCY POWER MODE)

1. UPON LOSS OF REGULAR POWER, MOTORIZED DAMPERS MS1, MS2, MS3, MS4, MR1, MR2, MR3 AND MR4 SHALL REMAIN FULLY OPENED. THE ENGINE GENERATOR SHALL START. AFTER A TIME DELAY OF 5 MIN. (FA), SUPPLY FAN SF-1 AND RETURN FAN RF-1 SHALL BE COMMANDED TO START & SHALL RAMP UP TO MAXIMUM SPEED.

2. MOTORIZED DAMPERS MS3 AND MR3 SERVING THE PATHOLOGY/RADIOLOGY AREAS SHALL REMAIN FULLY OPENED. MOTORIZED DAMPERS MS1, MS2, MS4, MR1, MR2 AND MR4 SHALL SLOWLY MODULATE TOWARDS THE CLOSED POSITION UNTIL DUCT STATIC PRESSURE SENSOR/TRANSMITTER SP-3 FAILS TO MAINTAIN ITS SET POINT. MOTORIZED DAMPERS MS1 AND MR1 SHALL MODULATE OPEN AS REQUIRED TO MAINTAIN SP-3 SET POINT.

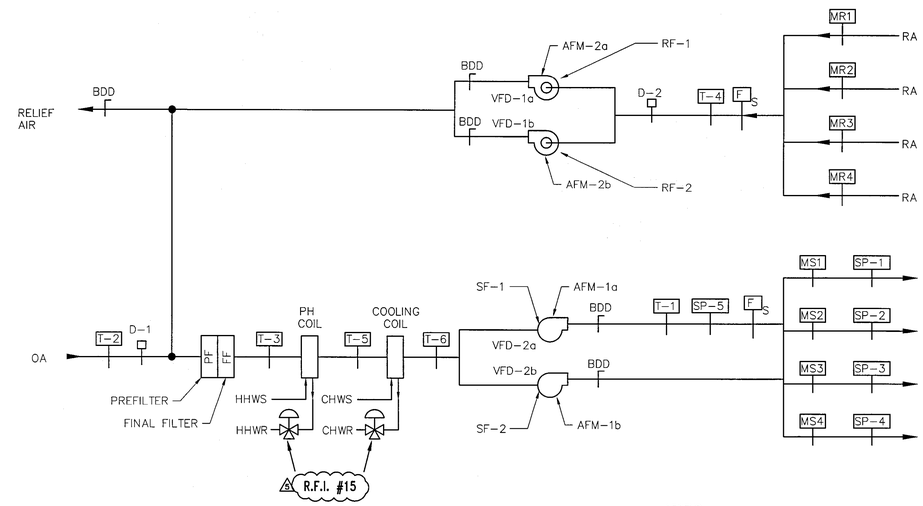

CONTROL DIAGRAM (AHU-1, AHU-7)

SCALE: NONE

LEGEND

T-1 SF DISCHARGE
T-2 OA
T-3 MIXED AIR
T-4 RA
T-5 PH COIL DISCHARGE
T-6 COOLING COIL DISCHARGE

D-1 OA MOTORIZED DAMPER
D-2 RA MOTORIZED DAMPER

AFM-1a AND 1b RETURN FAN AIR FLOW MEASURING STATION
AFM-2a AND 2b SUPPLY FAN AIR FLOW MEASURING STATION

VFD-1a AND 1b RETURN FAN VARIABLE FREQUENCY DRIVE
VFD-2a AND 2b SUPPLY FAN VARIABLE FREQUENCY DRIVE

F/S SMOKE DETECTOR

SP-1 THROUGH SP-4 DUCT STATIC PRESSURE SENSOR AND TRANSMITTER

SP-5 DUCT HIGH STATIC PRESSURE SENSOR AND TRANSMITTER

GENERAL NOTES:

1. SEE CONTROL DAMPER AND DUCT CONNECTION POINT PLAN.

2. CLOSE-OFF PRESSURE OF ALL CONTROL VALVE SHALL BE EQUAL TO OR EXCEED THE TOTAL DYNAMIC HEAD OF THE ASSOCIATED CENTRAL PLANT HEATING HOT WATER PUMPS AND THE CHILLED WATER PUMPS.

3. SP-1 AND SP-2 SHALL BE AVERAGING TYPE DUCT STATIC PRESSURE SENSORS/TRANSMITTERS USED TO CONTROL THE FAN SPEED OF SF-1 VIA VFD-2a.

4. SP-3 & SP-4 SHALL BE AVERAGING TYPE DUCT STATIC PRESSURE SENSORS/TRANSMITTERS USED TO CONTROL THE FAN SPEED OF SF-2 VIA VFD-2b.

SCALE: 3/4"=1'-0" 1/2"=1'-0" 1/4"=1'-0" 1/8"=1'-0"

092107

K.F. DAVIS ENGINEERING, INC
530 LA GONDA WAY, SUITE E
DANVILLE, CA 94526

Revisions: 1 DATED 11/10/08; 2 DATED 11/19/08; 3 DATED 07/14/09; 4 DATED 12/05/2011; 5 AS BUILTS FOR AHU 1 08/14/14	Drawing Title: TEMPERATURE CONTROLS AND SEQUENCE OF OPERATIONS	Project Title: BLDG 650 REPLACE AIR HANDLERS 1 THRU 4, 7 AND 9 – 15	Date: 12/05/11
			Project No.: 612A4-07-342
Approved:	Approved: Medical Center Director	Drawn: RMK	Building Number:
Approved:	Approved: Chief, Engineering Service	Checked: KL	Location: MATHER VAMC MATHER CALIFORNIA
			DRAWING No. H5.1 Dwg. Of

Department of Veterans Affairs

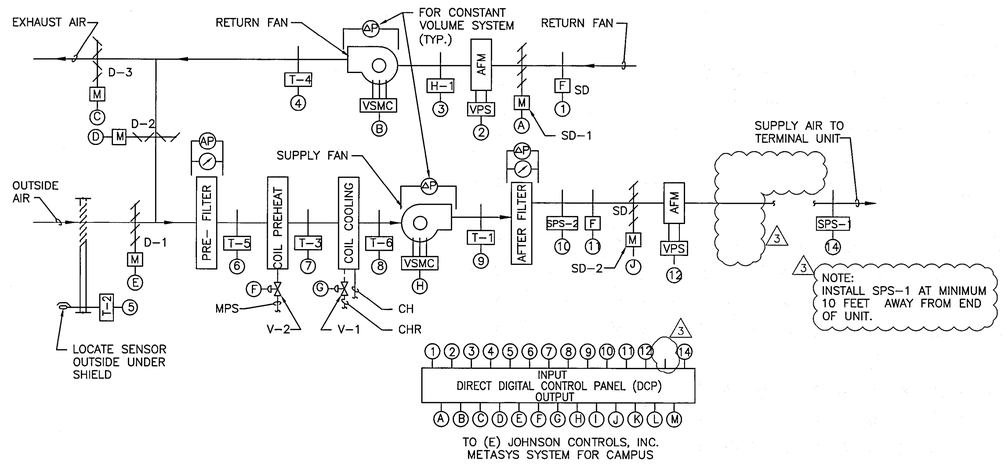

VARIABLE AIR VOLUME AIR HANDLING UNIT WITH ECONOMIZER CONTROL DIAGRAM

3 AHU-10 & 14

SEQUENCE OF OPERATION FOR VARIABLE AIR VOLUME AIR HANDLING UNIT WITH ECONOMIZER

1. GENERAL

_1.1 UNIT IS NORMALLY STARTED AND STOPPED BY THE DCP OR REMOTELY AT THE ECC. H-O-A SWITCH SHALL BE KEPT IN THE "AUTO" POSITION. "HAND" AND "OFF" POSITIONS SHALL BE USED ONLY FOR MAINTENANCE. WHEN THE UNIT IS "OFF" D-1, D-3, SD-1 AND SD-2 SHALL BE FULLY CLOSED. WHEN THE UNIT IS "ON" D-1, SD-1 AND SD-2 SHALL BE FULLY OPEN. D-2 AND D-3 SHALL MODULATE IN ACCORDANCE WITH THE FOLLOWING SEQUENCE:

2. TEMPERATURE CONTROL

_2.1 SUPPLY AIR TEMPERATURE, SENSED BY T-1, SHALL BE MAINTAINED AT SETPOINT VIA DCP BY MODULATING V-1 OR D-2 AND D-3 OR V-2 IN SEQUENCE.

2.2 WHEN THE TEMPERATURE OF THE OUTSIDE AIR, SENSED BY T-2, IS ABOVE 85°F [29.4°C], THE DCP SHALL PREVENT THE MODULATION OF D-2 AND D-3 AND SHALL ASSUME THE MINIMUM OUTSIDE AIR POSITION (D-2 FULLY OPENED AND D-3 FULLY CLOSED). THE DCP SHALL MODULATE V-1 TO MAINTAIN THE SUPPLY AIR TEMPERATURE, SENSED BY T-1.

2.3 WHEN THE TEMPERATURE OF THE OUTSIDE AIR, SENSED BY T-2, IS BETWEEN 65°F [18.3°C] AND THE SUPPLY AIR TEMPERATURE SENSED BY T-1, DAMPER D-2 SHALL FULLY CLOSE AND D3 SHALL BE FULLY OPEN (MAXIMUM OUTSIDE AIR POSITION). THE DCP SHALL MODULATE V-1 TO MAINTAIN THE SUPPLY AIR TEMPERATURE, SENSED BY T-1.

2.4 WHEN THE TEMPERATURE OF THE OUTSIDE AIR, SENSED BY T-2, IS BELOW THE SUPPLY AIR TEMPERATURE, SENSED BY T-1, DAMPERS D-2 AND D-3 SHALL MODULATE TO MAINTAIN THE SCHEDULED SUPPLY AIR TEMPERATURE. IF D-2 IS OPEN AND D-3 IS CLOSED TO MINIMUM OUTSIDE AIR, V-2 SHALL MODULATE OPEN TO MAINTAIN THE SUPPLY AIR TEMPERATURE, SENSED BY T-1.

3. AIR FLOW CONTROL

_3.1 THE SUPPLY AIR FLOW SHALL BE CONTROLLED BY THE DCP MODULATING THE SUPPLY FAN VARIABLE SPEED MOTOR CONTROLLER (VSMC) TO MAINTAIN 1.0" [25mm] OF DUCT STATIC PRESSURE (FIELD ADJUSTABLE), SENSED BY SPS-1. SEE FLOOR PLANS FOR LOCATION OF SPS-1.

3.2 THE DCP, USING TOTAL SUPPLY AIR AND RETURN AIR FLOW SIGNALS, SHALL RESET THE RETURN AIR FAN VSMC TO MAINTAIN A CONSTANT AIR FLOW DIFFERENCE BETWEEN THE SUPPLY AIR AND THE RETURN AIR EQUAL TO MINIMUM OUTSIDE AIR.

3.3 THE DCP, USING HIGH PRESSURE SENSOR SPS-2 LOCATED AT THE SUPPLY FAN DISCHARGE, SHALL PREVENT THE SUPPLY FAN FROM DEVELOPING OVER 3" [76mm] OF STATIC PRESSURE (FIELD ADJUSTABLE). IF STATIC PRESSURE AT SPS-2 DOES EXCEED 3" [76mm] THE SUPPLY AIR FAN SHALL STOP.

4. FREEZE PROTECTION

_4.1 IF THE AIR TEMPERATURE AS SENSED BY T-3 FALLS BELOW 45°F [7°C], AN ALARM SIGNAL SHALL INDICATE AT THE DCP AND ECC. IF THIS TEMPERATURE FALLS BELOW 40°F [4.4°C], THE SUPPLY AND RETURN FANS SHALL SHUT DOWN AND A CRITICAL ALARM SHALL INDICATE AT THE DCP AND ECC.

5. AUTOMATIC SHUTDOWN/RESTART

5.1 WHEN SMOKE IS DETECTED BY DUCT SMOKE DETECTOR, F SD, THE SUPPLY AND RETURN FANS SHALL SHUT "OFF" AND AN ALARM SIGNAL SHALL BE TRANSMITTED TO THE FIRE ALARM SYSTEM. ALL SMOKE DAMPERS IN THE SUPPLY AND RETURN DUCTS SHALL CLOSE.

5.2 EXHAUST FANS SERVING AREA OF THE SUPPLY FAN SHALL CONTINUE TO RUN. SUPPLY AND RETURN FANS SHALL RESTART AND SMOKE DAMPERS SHALL OPEN WHEN FIRE ALARM CIRCUIT IS RESET.

6. EMERGENCY CONSTANT SPEED OPERATION

_6.1 UPON FAILURE OF THE VSMC, THE SUPPLY AND RETURN FANS SHALL BE STARTED/STOPPED MANUALLY AT THE DCP OR THE ECC THROUGH THE BY-PASS STARTER. FANS SHALL THEN BE OPERATED AT CONSTANT SPEED.

7. CONTRACTOR

_7.1 CONTROLS SHALL BE JOHNSON CONTROLS, INC. TO MATCH EXISTING. ONLY AUTHORIZED JCI CONTRACTORS SHALL INSTALL THIS WORK.

_7.2 CONTRACTOR SHALL PROVIDE POWER, WIRING, CONDUIT, ETC. AS REQUIRED FOR CONTROLS WORK.

_7.3 SEE SPECIFICATIONS SECTION 23 09 23 FOR ADDITIONAL REQUIREMENTS.

K.F. DAVIS ENGINEERING, INC
530 LA GONDA WAY, SUITE E
DANVILLE, CA 94526

Revisions: 3 DATED 07/14/09	Drawing Title: MECHANICAL DIAGRAMS	Project Title: BLDG 650 REPLACE AIR HANDLERS 1 THRU 4, 7 AND 9 - 15	Date: 12/05/11
			Project No.: 612A4-07-342
Approved:	Approved: Medical Center Director	Drawn: RMK	Building Number:
Approved:	Approved: Chief, Engineering Service	Checked: KL	Location: MATHER VAMC MATHER CALIFORNIA
			DRAWING No. H5.2 Dwg. Of

Department of Veterans Affairs

SCALE: 3/4"=1'-0" 1/2"=1'-0" 1/4"=1'-0" 1/8"=1'-0"

011408

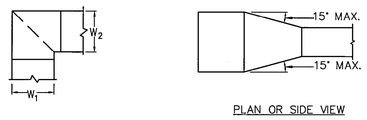

PLAN OR SIDE VIEW

TYPICAL DUCTWORK TRANSITION

NOTES:

1. ALL VANED ELBOWS SHALL BE CONSTRUCTED AND INSTALLED AS DETAILED BY SMACNA.
2. WHEN W_1 DOES NOT EQUAL W_2 VANE SHALL BE SINGLE VANE TYPE REGARDLESS OF W DIMENSION.
3. ALL SINGLE VANES SHALL HAVE A 2" (50 MM) RADIUS, 1 1/2" (40 MM) MAXIMUM SPACE BETWEEN VANES AND A 3/4" (20 MM) TRAILING EDGE.
4. WHEN W EQUALS W_1 AND W_2 IS GREATER THAN 20" (500 MM) VANES SHALL BE DOUBLE VANE TYPE.

1/H6.1 DUCTWORK SQUARE VANED ELBOWS AND TRANSITION DETAILS

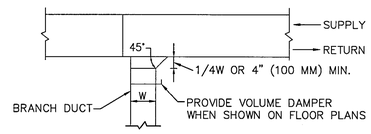

PLAN VIEW

2/H6.1 SUPPLY OR RETURN BRANCH DUCTWORK

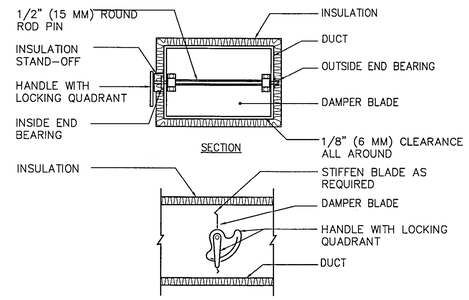

NOTES:

1. DELETE INSULATION STAND-OFF ON DUCTWORK WITHOUT EXTERIOR INSULATION.
2. DETAIL SHOWS SINGLE BLADE DAMPER. DAMPER INSTALLATION SHALL BE SIMILAR FOR MULTI-BLADE DAMPERS & ROUND DAMPERS.

3/H6.1 VOLUME DAMPER DETAIL

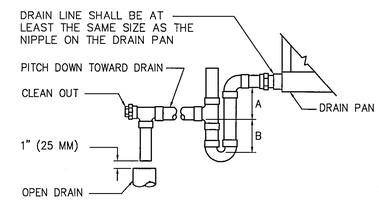

UNIT TYPE	A	B
DRAW THRU	5"	4"

4/H6.1 AIR HANDLING UNIT DRAIN TRAP DETAIL

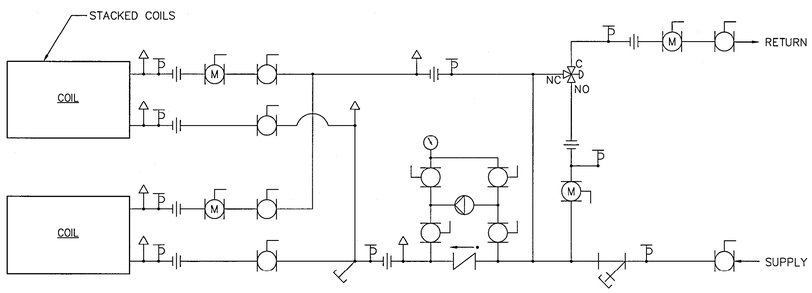

NOTES:

COIL PIPING DETAIL SHOWN IS FOR CHILLED WATER. FOR HEATING HOT WATER, THE NORMALLY OPEN PORT SHALL BE OPEN TO THE HOT WATER COIL.

5/H6.1 COIL PIPING DETAIL

LEGEND:

- Y-STRAINER WITH HOSE END DRAIN VALVE WITH CAP AND CHAIN
- BALL VALVE
- CALIBRATED BALANCING VALVE
- P/T PLUG
- MANUAL AIR VENT
- UNION
- THREE WAY AUTOMATIC TEMPERATURE CONTROL (ATC) VALVE
- 3/4" HOSE END DRAIN VALVE WITH CAP AND CHAIN
- PUMP

SUBMITTAL #19 5

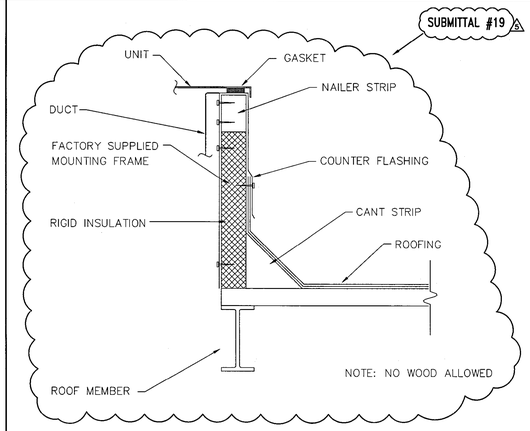

6/H6.1 EQUIP. MOUNTING DETAIL

SCALE: NONE

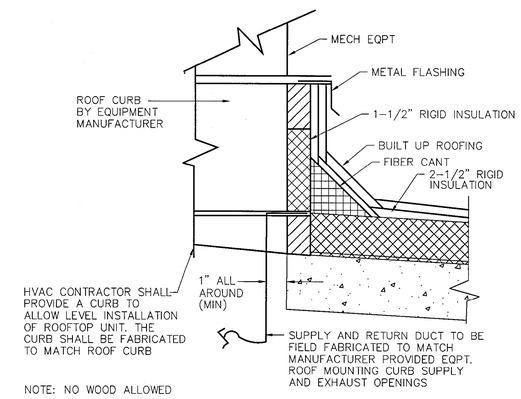

7/H6.1 DUCT ROOF PENETRATION DETAIL

SCALE: NONE

CONNECT TO EXISTING JOHNSON METASYS NETWORK ARCHITECTURE

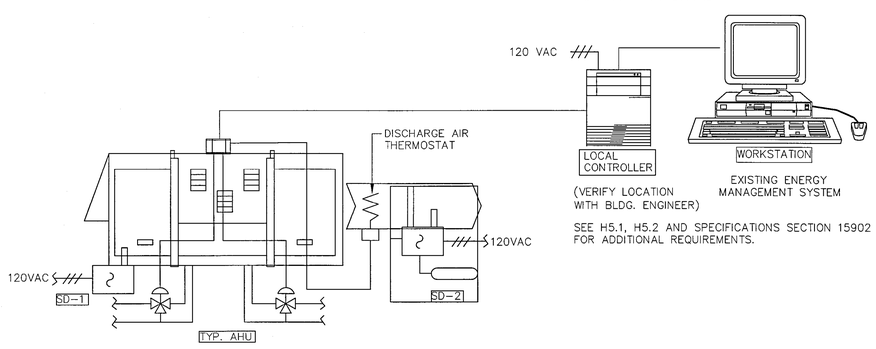

SEE H5.1, H5.2 AND SPECIFICATIONS SECTION 15902 FOR ADDITIONAL REQUIREMENTS.

8/H6.1 TEMPERATURE CONTROLS

SCALE: NONE

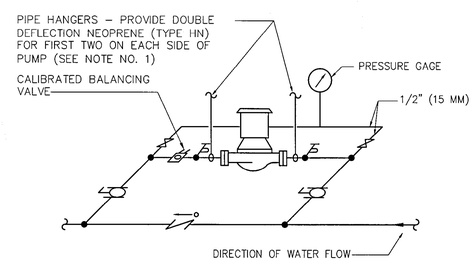

NOTE:

1. SUPPORT PUMP FROM PIPING ONLY. DO NOT SUPPORT PUMP FROM MOTOR.

9/H6.1 TYPICAL PIPING CONNECTIONS TO IN-LINE WATER PUMPS

NOTE: SUPERSTRUT CATALOG NUMBERS SHOWN, OR APPROVED EQUAL, UNISTRUT OR B-LINE

SECURE DUCT TO STRUT WITH 2" WIDE x 1/8" THICK HOT-DIPPED GALV. IRON STRAP, BOLT STRAP TO STRUT

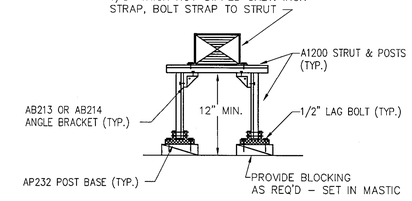

10/H3.3/H6.1 RECTANGULAR DUCT SUPPORT

SCALE: NONE

SCALE: 3/4"=1'-0" 1/2"=1'-0" 1/4"=1'-0" 1/8"=1'-0"

111008

K.F. DAVIS ENGINEERING, INC
530 LA GONDA WAY, SUITE E
DANVILLE, CA 94526

Revisions: 1 DATED 11/10/08; 2 DATED 11/19/08; 3 DATED 07/14/09; 4 DATED 12/05/2011; 5 AS BUILTS FOR AHU 1 08/14/14	Drawing Title: MECHANICAL DETAILS	Project Title: BLDG 650 REPLACE AIR HANDLERS 1 THRU 4, 7 AND 9 - 15	Date: 12/05/11
			Project No.: 612A4-07-342
Approved:	Approved: Medical Center Director	Drawn: RMK	Building Number:
Approved:	Approved: Chief, Engineering Service	Checked: KL	Location: MATHER VAMC MATHER CALIFORNIA
			DRAWING No. H6.1 Dwg. Of

Department of Veterans Affairs

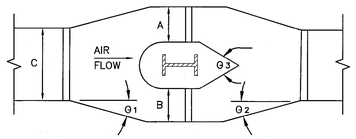

A + B = 1.25C (MIN) AT CONSTANT DEPTH

θ1 = 20° MAX
θ2 = 30° MAX
θ3 = 60° MAX

1 / H6.2 DUCT OBSTRUCTION

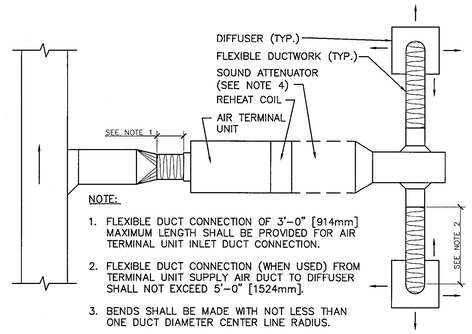

NOTE:

1. FLEXIBLE DUCT CONNECTION OF 3'-0" [914mm] MAXIMUM LENGTH SHALL BE PROVIDED FOR AIR TERMINAL UNIT INLET DUCT CONNECTION.
2. FLEXIBLE DUCT CONNECTION (WHEN USED) FROM TERMINAL UNIT SUPPLY AIR DUCT TO DIFFUSER SHALL NOT EXCEED 5'-0" [1524mm].
3. BENDS SHALL BE MADE WITH NOT LESS THAN ONE DUCT DIAMETER CENTER LINE RADIUS.
4. USE SOUND ATTENUATOR ONLY IF REQUIRED TO MEET DESIGN ROOM NC LEVEL.

2 / H6.2 FLEXIBLE DUCT CONNECTION FOR AIR TERMINAL UNITS

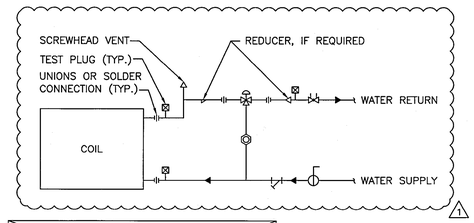

~~NOTE:~~

~~A STRAIGHT-THRU MODULATING CONTROL VALVE IS SHOWN BY SOLID PIPING. WHEN CONTROL DIAGRAM INDICATES THAT A THREE-WAY MODULATING CONTROL VALVE IS REQUIRED, PROVIDE DASHED PIPING AND FITTINGS ALSO.~~ 1

3 / H6.2 TYPICAL COIL PIPING CONNECTIONS TO VAV BOXES "3-WAY VALVE"

HANGER STRAPS OR RODS

MAX. DUCT ø IN. [mm]	QUANTITY/SIZE IN. [mm]	MAX. LOAD LBS. [kg]	MAX. SPACING IN. [mm]
26 [650]	ONE 1 [25] x 22 GA STRAP	260 [119]	144 [3658]
36 [900]	ONE 1 [25] x 18 GA STRAP	420 [190]	144 [3658]
50 [1250]	ONE 1 [25] x 16 GA STRAP	700 [317]	144 [3658]
60 [1500]	TWO 3/8 [10]ø. RODS	1320 [598]	144 [3658]
84 [2100]	TWO 1/2 [13]ø RODS	2500 [1133]	144 [3658]

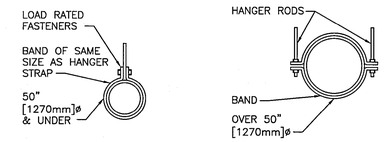

NOTE:
TABULATED DATA FROM SMACNA ALLOWS FOR DUCT REINFORCING AND INSULATION, BUT NO EXTERNAL LOAD.

4 / H6.2 ROUND DUCT HANGERS

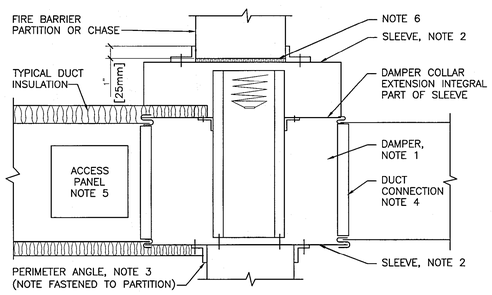

NOTE:

1. A VERTICAL DAMPER IS SHOWN. HORIZONTAL DAMPER INSTALLATION, IS SIMILAR. FOLLOW DAMPER MANUFACTURER'S INSTRUCTIONS, INCLUDING FASTENER OPTIONS AND GAGES FOR SLEEVE AND PERIMETER ANGLES. FIRE DAMPERS MUST BE INSTALLED IN THE PARTITION OR FLOOR AND NOT OUTSIDE THE PENETRATION.
2. GALVANIZED SLEEVE: GAGE NOT LESS THAN CONNECTING DUCT. FASTEN SLEEVE TO DAMPER FRAME AND TO PERIMETER ANGLES.
3. PERIMETER ANGELS: GALVANIZED STEEL, NOT LESS THAN 1 1/2"x1 1/2" [38x38mm], 14 GAGE, TO PROVIDE 1" [25mm] MINIMUM OVERLAP OF OPENING ON ALL 4 SIDES.
4. BREAKAWAY DUCT CONNECTION: CONTRACTOR'S OPTION OF TYPES SHOWN IN SMACNA LPDS, FIG. 2-13, SEAL JOINTS.
5. ACCESS PANELS: SIZE AND LOCATION TO PERMIT SERVICING THE FUSIBLE LINK OR LINKS.
6. PROVIDE 1/4" TO 1/2" [6 TO 13mm] CLEARANCE ON HEIGHT AND WIDTH. FILL OPEN SPACE WITH ROCK WOOL FIRESTOP FIBER.
7. ALL DUCT WORK RISERS WHICH ARE RUN EXPOSED, SUCH AS THRU ATTIC FLOORS AND MECHANICAL ROOM FLOORS, SHALL BE PROVIDED WITH 3" [76mm] HIGH CONCRETE CURB AROUND OPENING FOR DUCT.

5 / H6.2 SECTION THRU TYPICAL FIRE DAMPER INSTALLATION

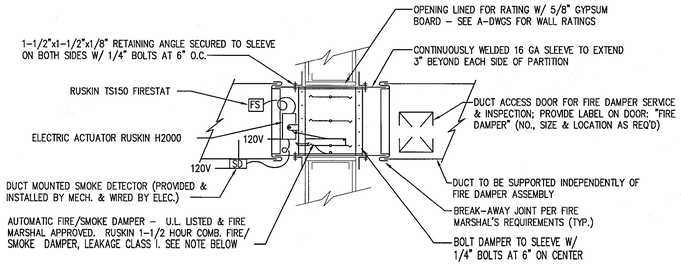

NOTES:

- RUSKIN MODEL FSD60 OR APPROVED EQUAL SHALL MEET NFPA90A & NFPA92A REQUIREMENTS FOR FIRE SMOKE DAMPERS & CALIFORNIA STATE FIRE MARSHAL CLASSIFICATION LISTING NO. 3225-245:102 (FIRE DAMPER) & 3230-245:110 (SMOKE DAMPER)
- SMOKE/FIRE DAMPER DETAIL IS FOR REFERENCE ONLY, SMOKE/FIRE AND FIRE DAMPERS SHALL BE STATE FIRE MARSHAL APPROVED AND INSTALLED STRICTLY PER MANUFACTURER'S PRINTED INSTRUCTIONS. MANUFACTURER'S INSTALLATION INSTRUCTIONS SHALL BE MADE AVAILABLE TO THE INSPECTING AUTHORITIES.
- RECTANGULAR DUCTWORK: RUSKIN MODEL FSD60 OR APPROVED EQUAL
- ROUND DUCTWORK: RUSKIN MODEL FSDR25 OR APPROVED EQUAL
- RUSKIN MODEL FSDR25 OR APPROVED EQUAL MEETS NFPA60A & NFPA92A REQUIREMENTS FOR FIRE SMOKE DAMPERS & CALIFORNIA STATE FIRE MARSHAL CLASSIFICATION LISTING NO. 3225-245:107 (FIRE DAMPER) & 3230-245:108 (SMOKE DAMPER)
- SMOKE DETECTOR SHALL BE ADDRESSABLE & COMPATIBLE WITH BUILDING FIRE ALARM SYSTEM; INSTALL SMOKE DETECTOR IN ACCORDANCE WITH MANUFACTURER'S INSTALLATION INSTRUCTIONS

6 / H6.2 SMOKE/FIRE DAMPER INSTALLATION

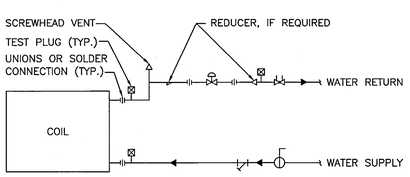

7 / H6.2 TYPICAL COIL PIPING CONNECTIONS TO VAV BOXES "2-WAY VALVE"

SCALE: 1/4"=1'-0"

SCALE: 1/2"=1'-0"

SCALE: 3/4"=1'-0"

SCALE: 1/8"=1'-0"

111008

K.F. DAVIS ENGINEERING, INC
530 LA GONDA WAY, SUITE E
DANVILLE, CA 94526

Revisions: 1 DATED 11/10/08; 2 DATED 11/19/08; 3 DATED 07/14/09; 4 DATED 12/05/2011	Drawing Title: MECHANICAL DETAILS	Project Title: BLDG 650 REPLACE AIR HANDLERS 1 THRU 4, 7 AND 9 - 15	Date: 12/05/11; Project No.: 612A4-07-342
Approved:	Approved: Medical Center Director	Drawn: RMK	Building Number:
Approved:	Approved: Chief, Engineering Service	Checked: KL	Location: MATHER VAMC MATHER CALIFORNIA

DRAWING No. H6.2 Dwg. of

Department of Veterans Affairs