U.S. DEPARTMENT OF AGRICULTURE
AGRICULTURAL RESEARCH SERVICE

BOILER UPGRADES DESIGN (CONTRACT 1)

WESTERN REGIONAL RESEARCH CENTER (WRRC)
ALBANY, CALIFORNIA

REGISTERED PROFESSIONAL ENGINEER
DUSTIN T. CARUSO
M42130
MECHANICAL
STATE OF CALIFORNIA
2/19/26

VICINITY MAP NO SCALE

LOCATION MAP NO SCALE

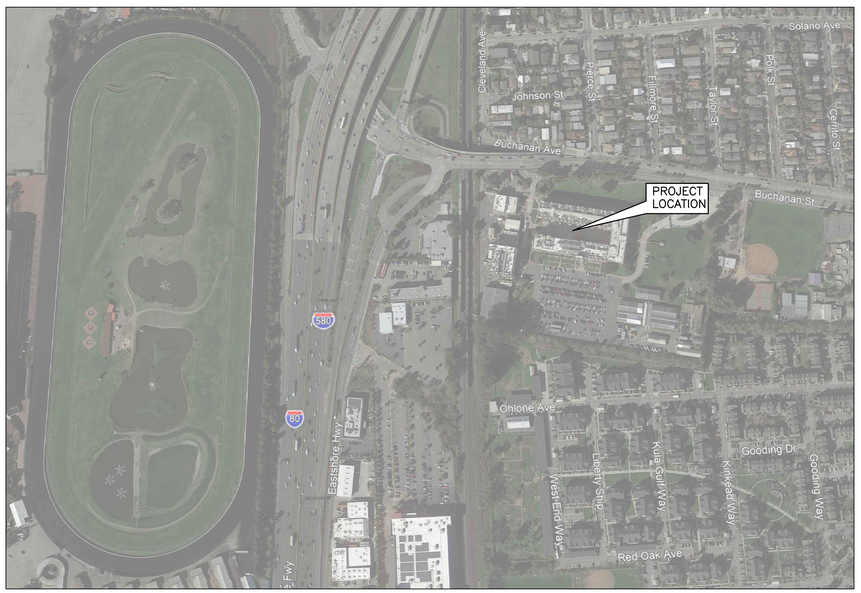

USDA

NO.	DATE	BY	DESCRIPTION

REVISIONS

The Johnson • McAdams FIRM P.A.
ARCHITECTS/ENGINEERS • PLANNING • SURVEYING • MANAGEMENT
P.O. BOX 513, GREENWOOD, MISSISSIPPI – (662) 455-4943

A–E FIRM	USDA
PROJECT MANAGER DTC	EPM TG
DESIGNER ETM	PPM XXX
CHECKED BY DTC	SAFETY & HEALTH XXX
JOB # 1525	REAL PROPERTY XXX

USDA

USDA Agricultural Research Service

USDA AGRICULTURAL RESEARCH SERVICE
BOILER UPGRADES DESIGN (CONTRACT 1)
WESTERN REGIONAL RESEARCH CENTER (WRRC)
ALBANY, CA

TITLE SHEET

PROJECT NO.	AGRICULTURAL RESEARCH SERVICE USDA/ARS, PA	SHEET
XXX	800 BUCHANNAN STREET ALBANY, CA	T–100
DATE 2/19/2026		1 OF 22

C:\Users\DUSTIN~1\AppData\Local\Temp\AcPublish_58208\T-100.dwg
Feb 20, 2026 - 9:26am

INDEX OF DRAWINGS

SHEET NO.	DRAWING NO.	TITLE
GENERAL		
T-100	1 OF 22	TITLE SHEET
T-101	2 OF 22	DRAWING INDEX, NOTES, AND LEGEND
MECHANICAL		
M-001	3 OF 22	GENERAL NOTES, LEGEND, AND ABBREVIATIONS
MD101	4 OF 22	MAIN BUILDING BASEMENT OVERALL MECHANICAL DEMOLITION PLAN
MD102	5 OF 22	MAIN BUILDING ATTIC OVERALL MECHANICAL DEMOLITION PLAN
MD103	6 OF 22	SERVICE BUILDING MECHANICAL DEMOLITION PLAN
MD401	7 OF 22	ENLARGED MECHANICAL DEMOLITION PLANS
M-101	8 OF 22	MAIN BUILDING BASEMENT OVERALL MECHANICAL NEW WORK PLAN
M-102	9 OF 22	MAIN BUILDING ATTIC OVERALL MECHANICAL NEW WORK PLAN
M-103	10 OF 22	SERVICE BUILDING MECHANICAL NEW WORK PLAN
M-401	11 OF 22	ENLARGED MECHANICAL NEW WORK PLANS
M-501	12 OF 22	MECHANICAL DETAILS
M-601	13 OF 22	MECHANICAL SCHEDULES
ELECTRICAL		
ED101	14 OF 22	MAIN BUILDING BASEMENT OVERALL ELECTRICAL DEMOLITION PLAN
ED102	15 OF 22	MAIN BUILDING ATTIC OVERALL ELECTRICAL DEMOLITION PLAN
ED103	16 OF 22	SERVICE BUILDING ELECTRICAL DEMOLITION PLAN
ED401	17 OF 22	ENLARGED ELECTRICAL DEMOLITION PLANS
E-000	18 OF 22	ELECTRICAL LEGEND
E-101	19 OF 22	MAIN BUILDING BASEMENT OVERALL ELECTRICAL NEW WORK PLAN
E-102	20 OF 22	MAIN BUILDING ATTIC OVERALL ELECTRICAL NEW WORK PLAN
E-103	21 OF 22	SERVICE BUILDING ELECTRICAL PLAN
E-401	22 OF 22	ENLARGED ELECTRICAL PLANS

WORK SEQUENCING NOTES

GENERAL WORK SEQUENCING NOTES:

THE CONTRACTOR MUST PROVIDE THE GOVERNMENT 14-DAYS NOTICE PRIOR TO ANY OUTAGE. A DETAILED WORK SEQUENCING PLAN MUST BE SUBMITTED TO THE CONTRACTING OFFICER'S REPRESENTATIVE FOR REVIEW AND APPROVAL PRIOR TO THE COMMENCEMENT OF ANY DEMOLITION OR NEW WORK.

WORK SEQUENCE #1:

DEMOLISH EXISTING B-7, B-8, AND ASSOCIATED PUMPS LOCATED IN THE BASEMENT. PROVIDE NEW B-7, B-8, AND ASSOCIATED PUMPS. CONNECT NEW BOILERS AND PUMPS TO EXISTING CONTROL SYSTEM. B-7 AND B-8 BOILER PLANT MUST BE FULLY OPERATIONAL, BALANCED, AND ASSOCIATED WORK COMPLETED PRIOR TO MOVING ON TO WORK SEQUENCE #2.

DURING THE BOILER REPLACEMENT UNDER THIS WORK SEQUENCE, ONLY ONE BOILER MUST BE TAKEN OFFLINE AND REPLACED AT A TIME. BEFORE MOVING ONTO THE NEXT BOILER IN THIS SEQUENCE, THE PREVIOUS BOILER MUST BE FULLY OPERATIONAL.

CONTRACTOR MUST CONDUCT THE BOILER REPLACEMENT WORK UNDER THIS SEQUENCE FIRST. EXISTING HWP-1-1 AND HWP-1-2 MUST REMAIN FULLY OPERATIONAL UNTIL THE BOILER REPLACEMENT IS COMPLETED. WORK IS BEING SEQUENCED IN THIS MANNER TO MINIMIZE DOWNTIME OF THE HEATING WATER SYSTEM DUE TO THE REROUTING OF THE EXISTING HEATING WATER PIPING.

WORK SEQUENCE #2:

DEMOLISH EXISTING B-6 AND ASSOCIATED PUMPS LOCATED IN THE ATTIC. PROVIDE NEW B-6 AND ASSOCIATED PUMPS. CONNECT NEW BOILER AND PUMPS TO EXISTING CONTROL SYSTEM. B-6 BOILER PLANT MUST BE FULLY OPERATIONAL, BALANCED, AND ASSOCIATED WORK COMPLETED PRIOR TO MOVING ON TO WORK SEQUENCE #3.

DURING THE REPLACEMENT OF HWP-6-1 AND HWP-6-2 UNDER THIS WORK SEQUENCE, ONLY ONE PUMP MUST BE TAKEN OFFLINE AND REPLACED AT A TIME. BEFORE MOVING ONTO THE NEXT PUMP IN THIS SEQUENCE, THE PREVIOUS PUMP MUST BE FULLY OPERATIONAL.

WORK SEQUENCE #3:

DEMOLISH EXISTING B-11, B-12, B-13, AND ASSOCIATED PUMPS LOCATED IN THE SERVICE BUILDING. PROVIDE NEW B-11, B-12, B-13, AND ASSOCIATED PUMPS. CONNECT NEW BOILER AND PUMPS TO EXISTING CONTROL SYSTEM. B-11, B-12, AND B-13 BOILER PLANT MUST BE FULLY OPERATIONAL AND ASSOCIATED WORK COMPLETED PRIOR TO PROJECT CLOSEOUT.

DURING THE BOILER REPLACEMENT UNDER THIS WORK SEQUENCE, ONLY ONE BOILER MUST BE TAKEN OFFLINE AND REPLACED AT A TIME. BEFORE MOVING ONTO THE NEXT BOILER IN THIS SEQUENCE, THE PREVIOUS BOILER MUST BE FULLY OPERATIONAL.

DURING THE REPLACEMENT OF HWP-5 AND HWP-6 UNDER THIS WORK SEQUENCE, ONLY ONE PUMP MUST BE TAKEN OFFLINE AND REPLACED AT A TIME. BEFORE MOVING ONTO THE NEXT PUMP IN THIS SEQUENCE, THE PREVIOUS PUMP MUST BE FULLY OPERATIONAL.

ENVIRONMENTAL NOTES

1. CONTRACTOR MUST ASSUME THAT ALL EXISTING PAINT COATINGS CONTAIN LEAD. IT IS NOT THE INTENT OF THIS PROJECT TO PROVIDE A COMPREHENSIVE LEAD-BASED PAINT REMEDIATION, BUT DISTURBANCE OF SOME PAINT-COATED SURFACES WILL BE REQUIRED TO PERFORM THE WORK. WHERE EXISTING PAINTED SURFACES ARE DISTURBED (DRILLING, CUTTING, ETC.), THE CONTRACTOR MUST PROVIDE WORKER PROTECTION IN ACCORDANCE WITH OSHA, AND ANY LOOSE COATINGS AND COATING DUST MUST BE DISPOSED OF AS A HAZARDOUS LEAD WASTE. PAINTED MATERIALS THAT ARE REMOVED AND DISPOSED OF MAY BE DISPOSED AS NORMAL CONSTRUCTION WASTE PROVIDED THE COATINGS ARE INTACT ON THE MATERIAL BEING DISPOSED.

2. THE CONTRACTOR MUST PROVIDE A DESIGN FOR THE ENVIRONMENTAL WORK AS A SUBMITTAL FOR APPROVAL PRIOR TO PERFORMING ANY ENVIRONMENTAL WORK.

LEGEND AND SYMBOLS

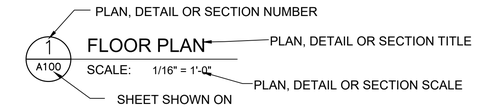

DRAWING TITLE

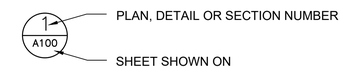

DETAIL MARK

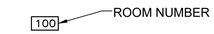

ROOM MARK

NO.	DATE	BY	DESCRIPTION

REVISIONS

THE Johnson • Mc Adams FIRM P.A.
ARCHITECTS/ENGINEERS • PLANNING • SURVEYING • MANAGEMENT
P.O. BOX 513, GREENWOOD, MISSISSIPPI – (662) 455-4943

A–E FIRM	USDA
PROJECT MANAGER	DTC
EPM	TG
DESIGNER	ETM
PPM	XXX
CHECKED BY	DTC
SAFETY & HEALTH	XXX
JOB #	1525
REAL PROPERTY	XXX

USDA Agricultural Research Service

USDA AGRICULTURAL RESEARCH SERVICE
BOILER UPGRADES DESIGN (CONTRACT 1)
WESTERN REGIONAL RESEARCH CENTER (WRRC)
ALBANY, CA

DRAWING INDEX, NOTES, AND LEGEND

PROJECT NO. XXX	AGRICULTURAL RESEARCH SERVICE USDA/ARS, PA	SHEET T-101
DATE 2/19/2026	800 BUCHANNAN STREET ALBANY, CA	2 OF 22

J:\Vicksburg\2025 Jobs\1525 USDA Boiler Upgrades - WRRC Albany, CA\07 Working Folder\Mech\Final\Drawings\Contract 1\T-101.dwg
Feb 20, 2026 - 9:26am

GENERAL MECHANICAL NOTES:

1. INSTALLATION OF HVAC WORK SHALL BE COORDINATED WITH OTHER TRADES BEFORE ANY WORK IS PERFORMED. DUCTWORK SHOWN ON PLANS IS SCHEMATIC. DUCTWORK SHALL BE INSTALLED TIGHT TO STRUCTURE. PROVIDE ALL TRANSITIONS, ELBOWS, ETC. REQUIRED TO AVOID CONFLICTS & MAXIMIZE CEILING HEIGHTS. EQUIPMENT, PIPING OR DUCTWORK INTERFERING WITH OTHER TRADES SHALL BE RELOCATED AS REQUIRED AT NO ADDITIONAL COST TO THE OWNER.
2. COORDINATE MECHANICAL AND ELECTRICAL SUCH THAT MECHANICAL PIPING, AND EQUIPMENT IS NOT LOCATED OVER OR ABOVE ANY ELECTRICAL, COMMUNICATIONS, OR DATA EQUIPMENT.
3. AT START OF CONSTRUCTION, PREPARE TYPED LISTS OF EQUIPMENT THAT REQUIRING ELECTRICAL WORK, AND SEND LISTS TO THE ELECTRICAL CONTRACTOR FOR REVIEW AND COORDINATION.
4. EQUIPMENT SHALL BE INSTALLED IN ACCORDANCE WITH MANUFACTURER'S APPROVED CLEARANCE AND INTERNATIONAL BUILDING CODE / INTERNATIONAL MECHANICAL CODE.
5. INSTALLATION OF EQUIPMENT SHALL PERMIT ACCESSIBILITY FOR SERVICE AND/OR REPLACEMENT WITHOUT NECESSITATING REMOVAL OR MODIFICATION TO OTHER PIPING, WIRING, OR EQUIPMENT.
6. CEILING-MOUNTED EQUIPMENT SHALL BE INSTALLED IN SUCH A MANNER THAT LIGHTS, PIPING, DUCTWORK, ETC., DO NOT BLOCK ACCESS TO EQUIPMENT AND RELATED ACCESSORIES.
7. COORDINATE WALL, FLOOR, AND ROOF PENETRATIONS WITH THE CONTRACTOR OFFICER.
8. SUPPLEMENTAL STEEL MEMBERS REQUIRED TO SUPPORT PIPING AND EQUIPMENT FROM MAIN STRUCTURE SHALL BE PROVIDED BY THE HVAC CONTRACTOR UNLESS SPECIFICALLY NOTED OTHERWISE.
9. PROVIDE ACCESS PANELS TO ACCESS DAMPERS, EQUIPMENT, AND VALVES LOCATED ABOVE HARD CEILINGS OR IN WALLS. ACTUAL LOCATIONS SHALL BE FIELD DETERMINED.
10. PROVIDE SUPPORTS FOR PIPING AND DUCTWORK IN ACCORDANCE WITH SPECIFICATIONS.
11. FOR WALL, FLOOR, AND SLAB PENETRATIONS, SEAL AND PATCH ALL UNUSED PENETRATION SPACE TO MATCH EXISTING CONSTRUCTION/FINISH OR AS SHOWN ON MECHANICAL DETAILS SHEET. PROVIDE FIRE STOPPING FOR RATED WALLS AND FLOORS.
12. INSTALL CONTROL WIRING IN GREEN CONDUIT. SEE DIVISION 26 SPECIFICATIONS FOR REQUIREMENTS.
13. MANUFACTURER NAME AND MODEL NUMBERS ARE BASIS OF DESIGN AND ARE SHOWN. REFER TO SPECIFICATIONS FOR COMPLETE REQUIREMENTS.
14. SPECIFICATIONS TAKE PRECEDENCE OVER DRAWINGS. HOWEVER, ITEMS SHOWN ON DRAWING BUT NOT IN THE SPECIFICATIONS ARE REQUIRED WITHIN THE PROJECT SCOPE. IN ADDITION, SPECIFIC ITEMS SHOWN ON THE DRAWINGS TAKE PRECEDENCE OVER SPECIFICATIONS IN CASES WHERE THE SPECIFICATION HAS OPTIONS.
15. ALL EQUIPMENT SHALL BE INSTALLED IN ACCORDANCE WITH MANUFACTURER'S APPROVED PUBLISHED LITERATURE.
16. ALL EQUIPMENT INSTALLED IN THIS PROJECT SHALL COMPLY WITH THE "BUY AMERICAN ACT". BASIS OF DESIGN SHOWN ON SCHEDULES IS TO ESTABLISH A STANDARD OF QUALITY, NOT TO LIMIT COMPETITION. EQUIVALENT EQUIPMENT FROM ANOTHER MANUFACTURER IS ACCEPTABLE.
17. CONTROLS CONTRACTOR SHALL PROVIDE ALL LOW VOLTAGE DEVICES, CONDUCTORS, CONDUIT AND PATHWAYS IN ACCORDANCE WITH THE REQUIREMENTS OF 26 20 00.
18. NOT ALL ABBREVIATIONS AND LEGEND ITEMS WILL BE USED.

ABBREVIATIONS:

@	AT	HWR	HEATING WATER RETURN
&	AND	HWS	HEATING WATER SUPPLY
AHU	AIR HANDLING UNIT	HVAC	HEATING, VENTILATING, AND AIR CONDITIONING
ARCH	ARCHITECT, ARCHITECTURAL		
AS	AIR SEPARATOR	HX	HEAT EXCHANGER
ASHRAE	AMERICAN SOCIETY OF HEATING, REFRIGERATING, AND AIR CONDITIONING ENGINEERS	HZ	HERTZ
		IMC	INTERNATIONAL MECHANICAL CODE
ASTM	AMERICAN SOCIETY FOR TESTING AND MATERIALS	IN	INCH, INCHES
		IN WC	INCHES WATER COLUMN
BD	BALANCING DAMPER	IN WG	INCHES WATER GAUGE
BDD	BACKDRAFT DAMPER	IPLV	INTEGRATED PART LOAD VALUE
BLDG	BUILDING		
BTU, BTUH	BRITISH THERMAL UNITS, BTUs PER HOUR	KW	KILOWATTS
CD	CONDENSATE DRAIN	L	LENGTH, LOUVER (WALL)
CFM	CUBIC FEET PER MINUTE	LAT	LEAVING AIR TEMPERATURE
CHW	CHILLED WATER	LBD	LINEAR BAR DIFFUSER
CHWR	CHILLED WATER RETURN	LBS	POUNDS
CHWS	CHILLED WATER SUPPLY	LWT	LEAVING WATER TEMPERATURE
CLG	COOLING		
CMU	CONCRETE MASONRY UNIT	MAX	MAXIMUM
CO	CLEANOUT	MBH	1000 BRITISH THERMAL UNITS
CO2	CARBON DIOXIDE	MCA	MINIMUM CIRCUIT AMPACITY
CONC	CONCRETE	MECH	MECHANICAL
COND	STEAM CONDENSATE		
CONN	CONNECT, CONNECTING, CONNECTION		
CON	CONTINUED	MERV	MINIMUM EFFICIENCY REPORTING VALUE
COV	STEAM CONVERTER	MFCR, MFG	MANUFACTURER, MANUFACTURING
COP	COEFFICIENT OF PERFORMANCE	MIN	MINIMUM
COR	CONTRACTING OFFICER'S (OWNER'S) REPRESENTATIVE	MOCP, MOP	MAXIMUM OVER CURRENT PROTECTION
		MTWR	MEDIUM TEMPERATURE WATER RETURN
CT	COOLING TOWER	MTWS	MEDIUM TEMPERATURE WATER SUPPLY
CU	CONDENSING UNIT	MXB	MIXING BOX
CWR	CONDENSER WATER RETURN		
CWS	CONDENSER WATER SUPPLY	N.C.	NORMALLY CLOSED
		NC	NOISE CRITERIA
D	DEPTH	NG	NATURAL GAS
DB, Tdb	DRY BULB (TEMPERATURE)	NO.	NUMBER
dBA	DECIBELS	N.C.	NORMALLY OPEN
DCW	DOMESTIC COLD WATER	NTS	NOT TO SCALE
DDC	DIRECT DIGITAL CONTROLS		
DEG. F (°F)	DEGREES FAHRENHEIT	OA	OUTSIDE AIR
DF	DESTRATIFICATION FAN	OD	OUTSIDE DAMPER
DFCU	DUCTLESS FAN COIL UNIT		
DH	DEHUMIDIFIER	PCHWR	PLANT CHILLED WATER RETURN
DIA, Ø	DIAMETER	PCHWS	PLANT CHILLED WATER SUPPLY
DIV	DIVISION	PD	PRESSURE DROP
DN	DOWN	PH	PHASE
DP, PD	DIFFERENTIAL PRESSURE, PRESSURE DROP	PLBG	PLUMBING
		PMTWR	PLANT MEDIUM TEMPERATURE WATER RETURN
DSCU	DUCTLESS SPLIT CONDENSING UNIT		
DSHP	DUCTLESS SPLIT HEAT PUMP	PMTWS	PLANT MEDIUM TEMPERATURE WATER SUPPLY
DWG	DRAWING		
DX	DIRECT EXPANSION	PPM	PARTS PER MILLION
		PRV	PRESSURE RELIEF VALVE
EA	EXHAUST AIR	PSI	POUNDS PER SQUARE INCH
EAG	EXHAUST AIR GRILLE		
EAT	ENTERING AIR TEMPERATURE	QTY	QUANTITY
EER	ENERGY EFFICIENCY RATIO		
EF	EXHAUST FAN	RA	RETURN AIR
EFF	EFFICIENCY	RAG	RETURN AIR GRILLE
ELEC	ELECTRICAL	RH	RELATIVE HUMIDITY, ROOF HOOD
EMCS	ENERGY MONITORING AND CONTROLS SYSTEM	RM	ROOM
		RPM	REVOLUTIONS PER MINUTE
ERU	ENERGY RECOVERY UNIT		
ERV	ENERGY RECOVERY VENTILATOR		
ESP	EXTERNAL STATIC PRESSURE	SA	SUPPLY AIR
ET	EXPANSION TANK	SAD	SUPPLY AIR DIFFUSER
EUH	ELECTRIC UNIT HEATER	SAG	SUPPLY AIR GRILLE
EWT	ENTERING WATER TEMPERATURE	SD	SMOKE DAMPER, SMOKE DETECTOR
EXT	EXTERIOR	SEER	SEASONAL ENERGY EFFICIENCY RATIO
EXH	EXHAUST	SF	SUPPLY FAN
EXIST.	EXISTING	SMACNA	SHEET METAL AND AIR CONDITIONING CONTRACTOR'S NATIONAL ASSOCIATION
FCU	FAN COIL UNIT	SP	STATIC PRESSURE
FD	FIRE DAMPER	STM	STEAM
FFE	FINISHED FLOOR ELEVATION	SS	STAINLESS STEEL
FLA	FULL LOAD AMPS		
FOB	FLAT ON BOTTOM	TEMP	TEMPERATURE
FOT	FLAT ON TOP	TSTAT	THERMOSTAT
FPM	FEET PER MINUTE	TYP	TYPICAL
FSD	FIRE SMOKE DAMPER		
FT	FOOT, FEET	UH	UNIT HEATER
FT WG	FEET WATER GAUGE	UL	UNDERWRITER'S LABORATORY
FV	FLUE VENT	UMCS	UTILITY MONITORING AND CONTROL SYSTEM
GA	GAGE		
GC	GENERAL CONTRACTOR	V	VOLTAGE, VOLTS
GPM	GALLONS PER MINUTE	VAV	VARIABLE AIR VOLUME TERMINAL UNIT
GWH	GAS WATER HEATER	VD	VOLUME DAMPER
		VFD	VARIABLE FREQUENCY DRIVE
H	HEIGHT	VRF	VARIABLE REFRIGERANT FLOW
HPS	HIGH PRESSURE STEAM	VVS	VARIABLE VOLUME SUPPLY TERMINAL UNIT
HR	HOUR		
HTG	HEATING	VVLE	VARIABLE VOLUME EXHAUST TERMINAL UNIT
HTR	HEATER		
HTW	HEATING WATER		
HWR	HEATING WATER RETURN	WB, Twb	WET BULB (TEMPERATURE)

MISCELLANEOUS LEGEND:

- SUPPLY AIR DIFFUSER — FLOW ARROWS INDICATE AIR PATTERN. NO FLOW ARROWS SHOWN INDICATES 4-WAY PATTERN.
- RETURN AIR GRILLE
- EXHAUST AIR GRILLE
- (T) THERMOSTAT
- (H) HUMIDISTAT
- (TH) THERMOSTAT/ HUMIDISTAT
- ($) START/ STOP SWITCH
- (SD) DUCT SMOKE DETECTOR
- (F) FIRESTAT
- [T] TEMPERATURE SENSOR
- [H] HUMIDITY SENSOR
- [SP] STATIC PRESSURE SENSOR
- [DP] DIFFERENTIAL PRESSURE SENSOR
- [CO] CARBON MONOXIDE SENSOR
- [C] CARBON DIOXIDE SENSOR
- [AQ] AIR QUALITY SENSOR
- (J) 120 VOLT STAND BY POWER JUNCTION BOX PROVIDED BY THE ELECTRICAL CONTRACTOR. JUNCTION BOX IS DEDICATED FOR USE BY THE CONTROLS CONTRACTOR.
- POINT OF RECONNECTION OR EXTENT OF DEMOLITION
- [VFD] VARIABLE FREQUENCY DRIVE
- (A) CONTROL WIRING
- ∅ ROUND OR DIAMETER
- OVAL OR FLAT OVAL
- SERVICE CLEARANCE

PIPING LEGEND:

- ELBOW UP
- ELBOW DOWN
- RISE OR DROP
- BRANCH BOTTOM CONNECTION
- BRANCH TOP CONNECTION
- TEE OUTLET UP
- TEE OUTLET DOWN
- PIPE CAP
- DIRECTION OF FLOW
- CONCENTRIC REDUCER
- ECCENTRIC REDUCER
- UNION
- PIPE FLANGE
- PIPE ANCHOR (PA)
- PIPE GUIDE (PG)
- STRAINER WITH BLOWDOWN VALVE, CAP, AND CHAIN
- GATE VALVE
- BALL VALVE
- FLOW MEASURING/BALANCING/SHUT-OFF VALVE
- CHECK VALVE
- BUTTERFLY VALVE
- PRESSURE REDUCING VALVE
- GLOBE VALVE
- PRESSURE/TEMPERATURE TAP WITH BALL VALVE
- FLOW SWITCH (FS)
- PRESSURE SWITCH (PS)
- PLUG VALVE
- MANUAL AIR VENT
- AUTOMATIC AIR VENT
- T&P RELIEF VALVE
- PRESSURE GAUGE WITH GAUGE COCK
- THERMOMETER
- FLEXIBLE CONNECTION

REGISTERED PROFESSIONAL ENGINEER — DUSTIN T. CARUSO — 32179 — MECHANICAL — STATE OF CALIFORNIA

2/19/26

NO.	DATE	BY	DESCRIPTION

REVISIONS

The Johnson + McAdams Firm
ARCHITECTS, ENGINEERS + PLANNING + SURVEYING + MANAGEMENT
P.O. BOX 513, GREENWOOD, MISSISSIPPI ~ (662) 455-4643

A-E FIRM	USDA
PROJECT MANAGER	EPM
DTC	TG
DESIGNER	PPM
ETM	XXX
CHECKED BY	SAFETY & HEALTH
DTC	XXX
JOB #	REAL PROPERTY
1525	XXX

USDA

USDA Agricultural Research Service

USDA AGRICULTURAL RESEARCH SERVICE
BOILER UPGRADES DESIGN (CONTRACT 1)
WESTERN REGIONAL RESEARCH CENTER (WRRC)
ALBANY, CA

GENERAL NOTES, LEGEND, AND ABBREVIATIONS

PROJECT NO. XXX	AGRICULTURAL RESEARCH SERVICE USDA/ARS, PA	SHEET M-001
DATE 2/19/2026	800 BUCHANNAN STREET ALBANY, CA	3 OF 22

C:\Users\DUSTIN~1\AppData\Local\Temp\AcPublish_48020\M-001.dwg
Feb 19, 2026 - 5:19pm

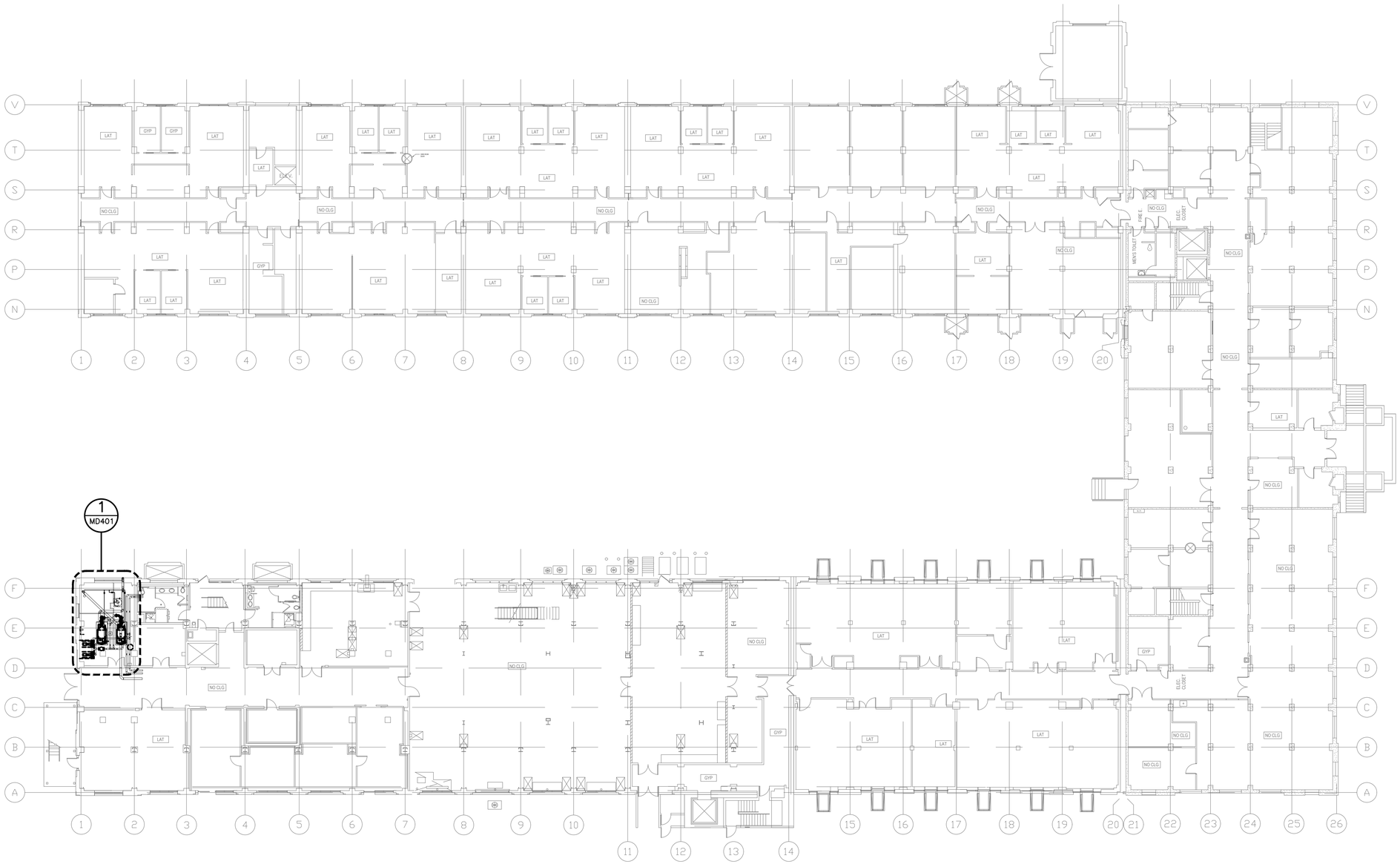

1 MD101 MAIN BUILDING BASEMENT MECHANICAL DEMOLITION PLAN

SCALE: 1/16" = 1'-0"

GENERAL NOTES

1. THE DEMOLITION PLAN AND EXISTING CONDITIONS ARE APPROXIMATE. ITEMS TO BE REMOVED ARE DESIGNATED BY HATCHING AND DASHED LINES. OTHER ITEMS ARE INTENDED TO REMAIN IN PLACE UNLESS NOTED OTHERWISE.

GRAPHIC SCALE

0 8' 16' 32' 48'

SCALE: 1/16" = 1'-0"

NO.	DATE	BY	DESCRIPTION

REVISIONS

THE Johnson • Mc Adams FIRM P.A.
ARCHITECTS/ENGINEERS • PLANNING • SURVEYING • MANAGEMENT
P.O. BOX 513, GREENWOOD, MISSISSIPPI • (662) 455-4943

A–E FIRM	USDA
PROJECT MANAGER DTC	EPM TG
DESIGNER ETM	PPM XXX
CHECKED BY DTC	SAFETY & HEALTH XXX
JOB # 1525	REAL PROPERTY XXX

USDA Agricultural Research Service

USDA AGRICULTURAL RESEARCH SERVICE
BOILER UPGRADES DESIGN (CONTRACT 1)
WESTERN REGIONAL RESEARCH CENTER (WRRC)
ALBANY, CA

MAIN BUILDING BASEMENT OVERALL MECHANICAL DEMOLITION PLAN

PROJECT NO. XXX	AGRICULTURAL RESEARCH SERVICE USDA/ARS, PA	SHEET MD101
DATE 2/19/2026	800 BUCHANNAN STREET ALBANY, CA	4 OF 22

REGISTERED PROFESSIONAL ENGINEER
DUSTIN T. CARUSO
M42132
MECHANICAL
STATE OF CALIFORNIA

2/19/26

J:\hattiesburg\2025 Jobs\1525 USDA Boiler Upgrades – WRRC Albany CA\07 Working Folder\Mech\Final\Drawings\Contract 1\MD101.dwg
Feb 19, 2026 – 5:19pm

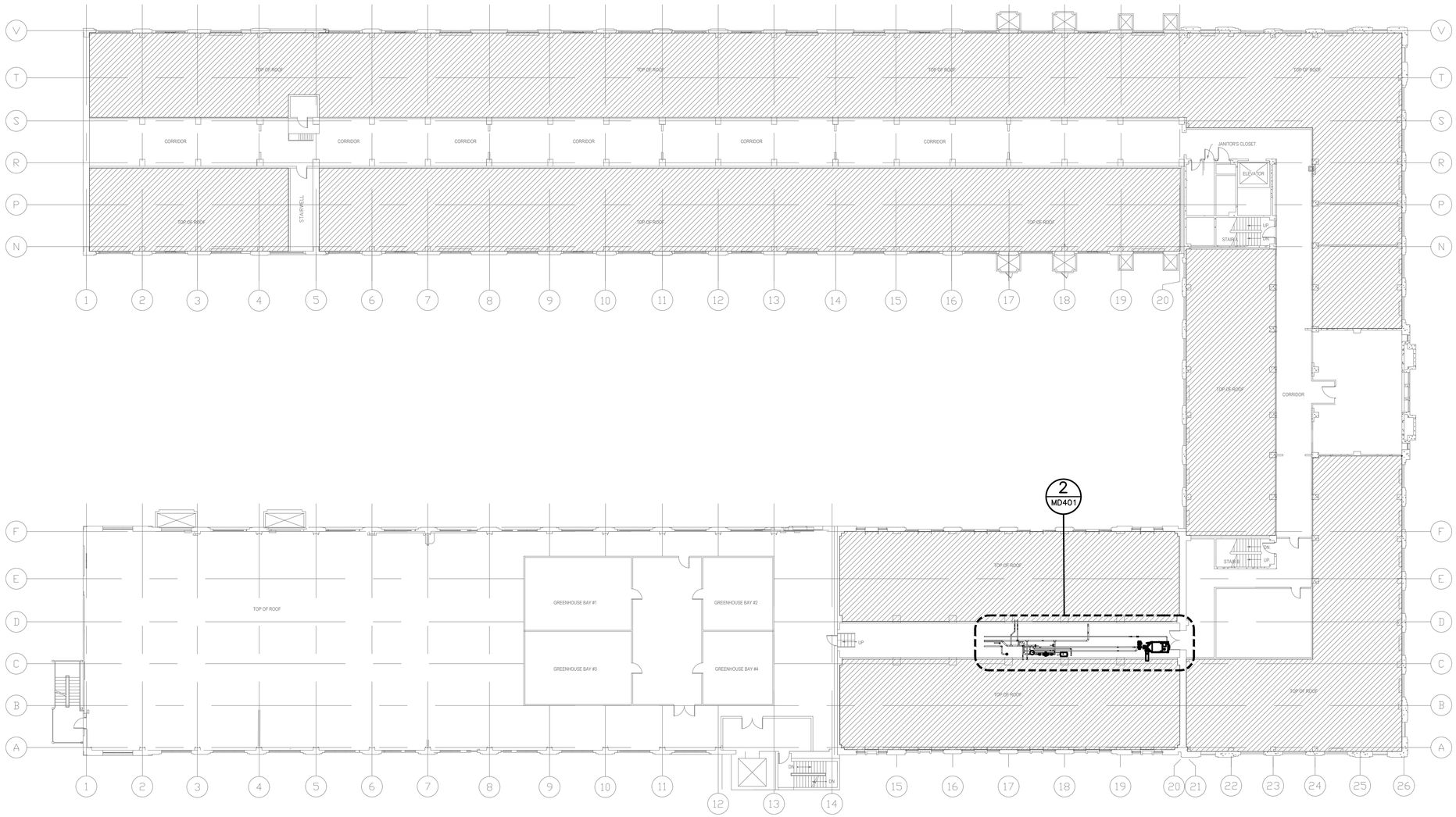

1 MD102 MAIN BUILDING ATTIC MECHANICAL DEMOLITION PLAN

SCALE: 1/16" = 1'-0"

GENERAL NOTES

1. THE DEMOLITION PLAN AND EXISTING CONDITIONS ARE APPROXIMATE. ITEMS TO BE REMOVED ARE DESIGNATED BY HATCHING AND DASHED LINES. OTHER ITEMS ARE INTENDED TO REMAIN IN PLACE UNLESS NOTED OTHERWISE.

GRAPHIC SCALE

0 8' 16' 32' 48'

SCALE: 1/16" = 1'-0"

THE Johnson + Mc Adams FIRM P.A.
ARCHITECTS/ENGINEERS + PLANNING + SURVEYING + MANAGEMENT
P.O. BOX 513, GREENWOOD, MSSSSSPPI ~ (662) 455-4943

NO.	DATE	BY	DESCRIPTION

REVISIONS

A-E FIRM	USDA
PROJECT MANAGER	EPM
DTC	TG
DESIGNER	PPM
ETM	XXX
CHECKED BY	SAFETY & HEALTH
DTC	XXX
JOB #	REAL PROPERTY
1525	XXX

REGISTERED PROFESSIONAL ENGINEER — DUSTIN T. CARUSO — M42137 — MECHANICAL — STATE OF CALIFORNIA

2/19/26

USDA Agricultural Research Service

USDA AGRICULTURAL RESEARCH SERVICE
BOILER UPGRADES DESIGN (CONTRACT 1)
WESTERN REGIONAL RESEARCH CENTER (WRRC)
ALBANY, CA

MAIN BUILDING ATTIC OVERALL MECHANICAL DEMOLITION PLAN

PROJECT NO. XXX	AGRICULTURAL RESEARCH SERVICE USDA/ARS, PA	SHEET MD102
DATE 2/19/2026	800 BUCHANNAN STREET ALBANY, CA	5 OF 22

J:\Nottlecity\2025 Jobs\1525 USDA Boiler Upgrades - WRRC Albany CA\07 Working Folder\Mech\Final\Drawings\Contract 1\MD102.dwg
Feb 19, 2026 - 5:19pm

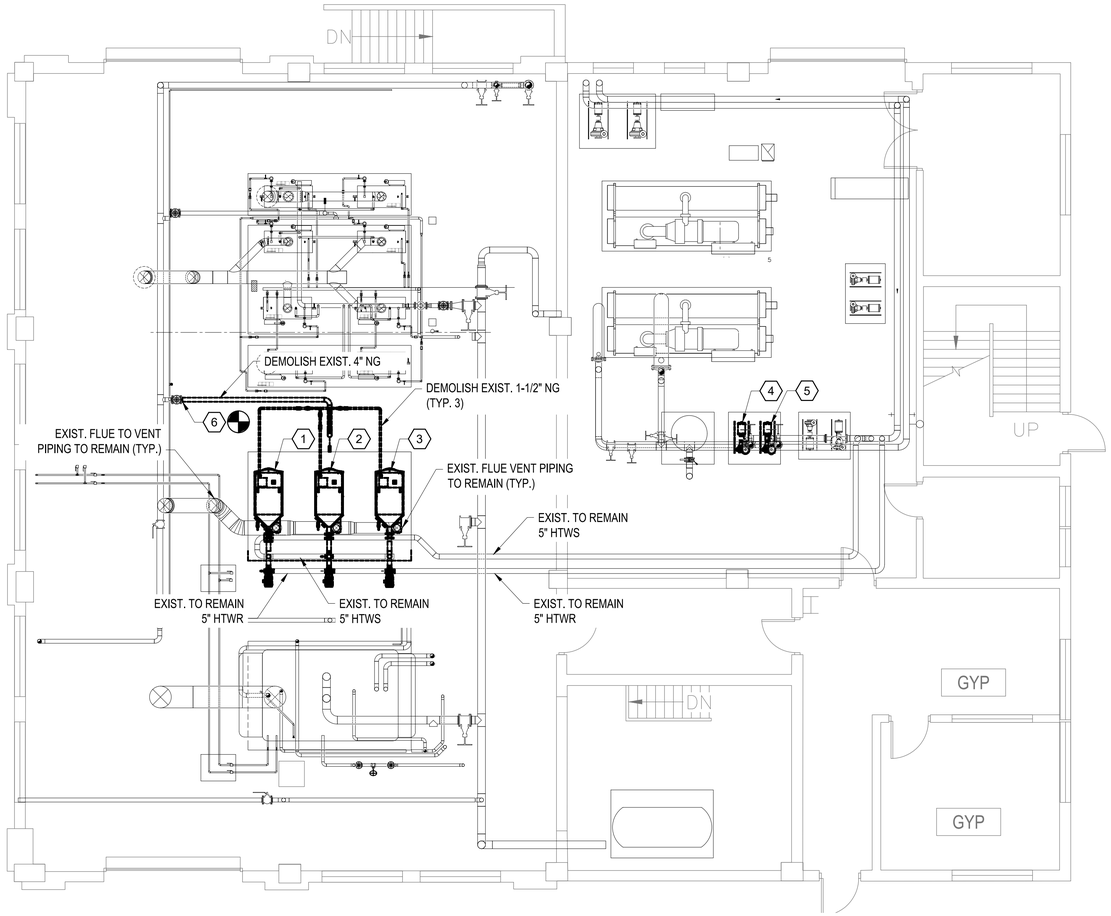

1 MD103 SERVICE BUILDING MECHANICAL DEMOLITION PLAN

SCALE: 3/16" = 1'-0"

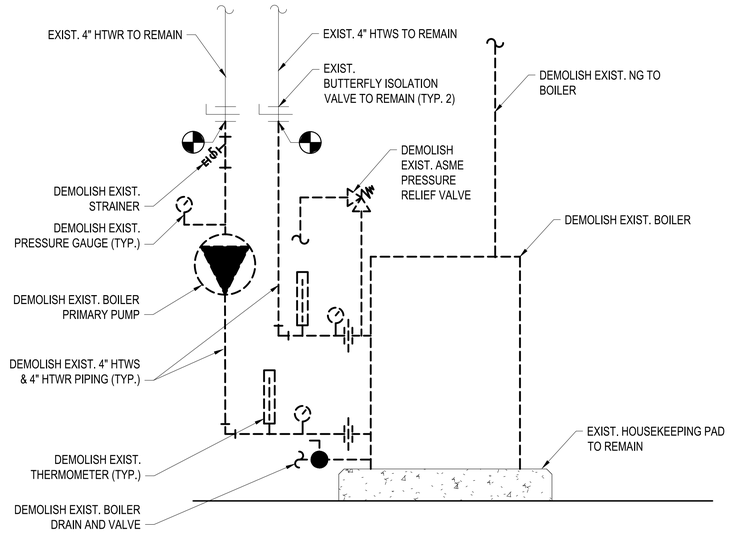

2 MD103 EXIST. B-11, B-12, & B-13 DEMOLITION DETAIL

SCALE: NTS

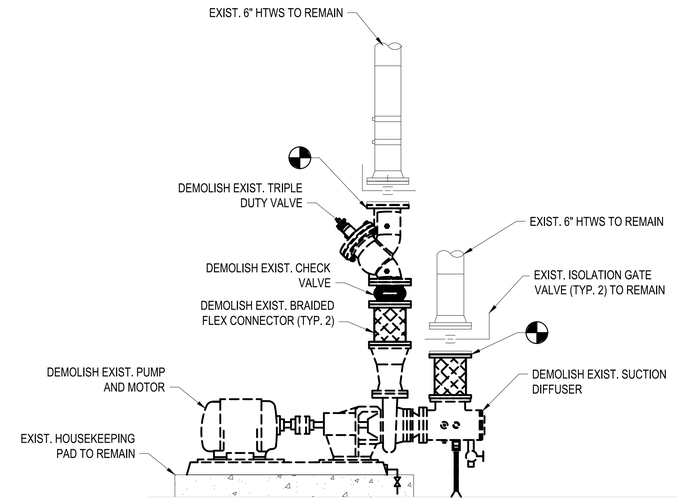

3 MD103 EXIST. HWP-5 AND HWP-6 DEMOLITION DETAIL

SCALE: NTS

GENERAL NOTES

1. THE DEMOLITION PLAN AND EXISTING CONDITIONS ARE APPROXIMATE. ITEMS TO BE REMOVED ARE DESIGNATED BY HATCHING AND DASHED LINES. OTHER ITEMS ARE INTENDED TO REMAIN IN PLACE UNLESS NOTED OTHERWISE.

(X) KEYED NOTES

1. DEMOLISH EXISTING BOILER (B-11), COMBUSTION AIR INTAKE FILTER, BOILER PRIMARY CIRCULATION PUMP, AND ALL OTHER APPURTENANCES. DEMOLISH HEATING WATER SUPPLY AND RETURN PIPING UP TO BOILER ISOLATION VALVES.
2. DEMOLISH EXISTING BOILER (B-12), COMBUSTION AIR INTAKE FILTER, BOILER PRIMARY CIRCULATION PUMP, AND ALL OTHER APPURTENANCES. DEMOLISH HEATING WATER SUPPLY AND RETURN PIPING UP TO BOILER ISOLATION VALVES.
3. DEMOLISH EXISTING BOILER (B-13), COMBUSTION AIR INTAKE FILTER, BOILER PRIMARY CIRCULATION PUMP, AND ALL OTHER APPURTENANCES. DEMOLISH HEATING WATER SUPPLY AND RETURN PIPING UP TO BOILER ISOLATION VALVES.
4. DEMOLISH EXISTING BASE MOUNTED HEATING WATER PUMP (HWP-5). DEMOLISH EXISTING 6" HEATING WATER PIPING UP TO ISOLATION VALVES. EXISTING PUMP MUST BE TURNED OVER TO THE GOVERNMENT AND DELIVER TO A LOCATION ON SITE DETERMINED BY THE CONTRACTING OFFICER.
5. DEMOLISH EXISTING BASE MOUNTED HEATING WATER PUMP (HWP-6). DEMOLISH EXISTING 6" HEATING WATER PIPING UP TO ISOLATION VALVES. EXISTING PUMP MUST BE TURNED OVER TO THE GOVERNMENT AND DELIVER TO A LOCATION ON SITE DETERMINED BY A CONTRACTING OFFICER.
6. DEMOLISH EXISTING NATURAL GAS PIPING UP TO EXISTING MAIN ISOLATION VALVE. DEMOLISH EXISTING BOILER ISOLATION VALVES, AND REGULATORS.

GRAPHIC SCALE

0 2' 4' 8' 16'

SCALE: 3/16"= 1'-0"

NO.	DATE	BY	DESCRIPTION

REVISIONS

The Johnson + McAdams Firm PA
ARCHITECTS/ENGINEERS • PLANNING • SURVEYING • MANAGEMENT
P.O. BOX 513, GREENWOOD, MISSISSIPPI ~ (662) 455-4443

REGISTERED PROFESSIONAL ENGINEER — T. CAMERON CAMERON — 22139 — MECHANICAL — STATE OF CALIFORNIA
2/19/26

A–E FIRM	USDA
PROJECT MANAGER DTC	EPM TG
DESIGNER ETM	PPM XXX
CHECKED BY DTC	SAFETY & HEALTH XXX
JOB # 1525	REAL PROPERTY XXX

USDA Agricultural Research Service

USDA AGRICULTURAL RESEARCH SERVICE
BOILER UPGRADES DESIGN (CONTRACT 1)
WESTERN REGIONAL RESEARCH CENTER (WRRC)
ALBANY, CA

SERVICE BUILDING
MECHANICAL DEMOLITION PLAN

PROJECT NO. XXX	AGRICULTURAL RESEARCH SERVICE USDA/ARS, PA	SHEET MD103
DATE 2/19/2026	800 BUCHANNAN STREET ALBANY, CA	6 OF 22

J:\Hattiesburg\2025 Jobs\1525 USDA Boiler Upgrades - WRRC Albany CA\07 Working Folder\Mech\Final\Drawings\Contract 1\MD103.dwg
Feb 19, 2026 - 5:20pm

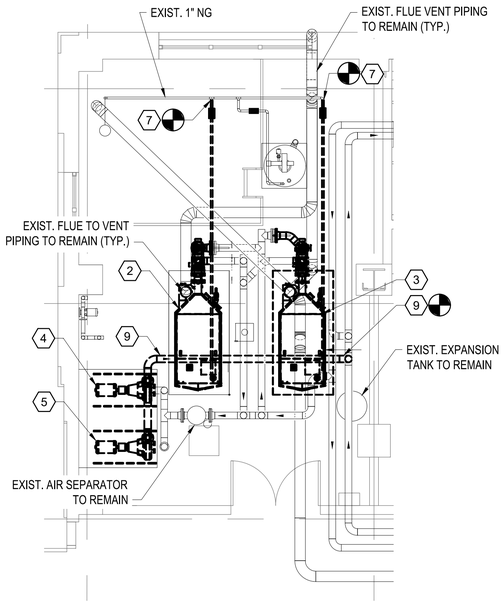

1 MD401 MAIN BUILDING BASEMENT ENLARGED MECHANICAL DEMOLITION PLAN

SCALE: 1/4" = 1'-0"

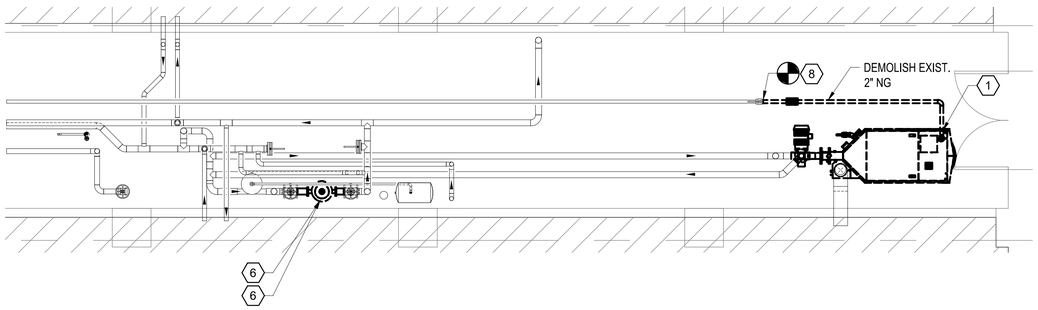

2 MD401 MAIN BUILDING ATTIC ENLARGED MECHANICAL DEMOLITION PLAN

SCALE: 1/4" = 1'-0"

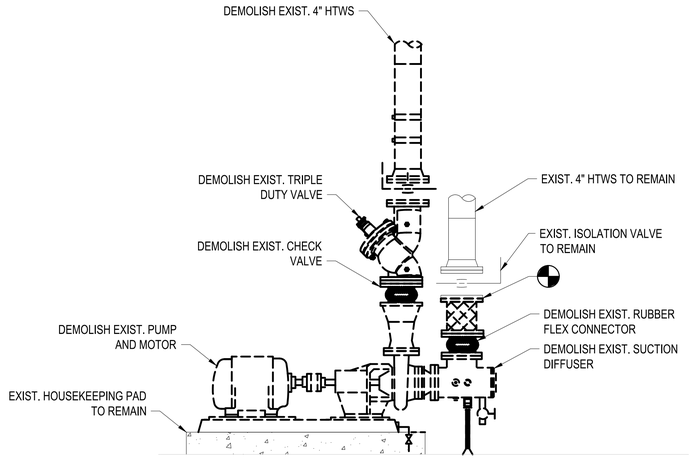

4 MD401 EXIST. HWP 1-1 AND HWP 1-2 DEMOLITION DETAIL

SCALE: NTS

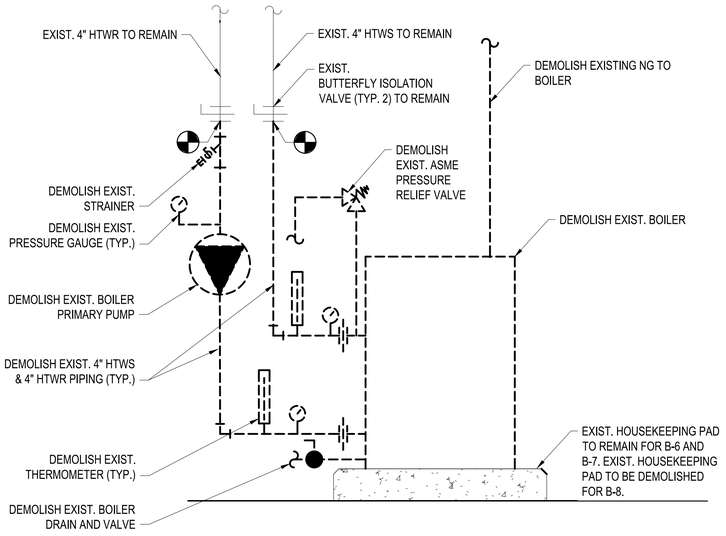

3 MD401 EXIST. B-6, B-7, & B-8 DEMOLITION DETAIL

SCALE: NTS

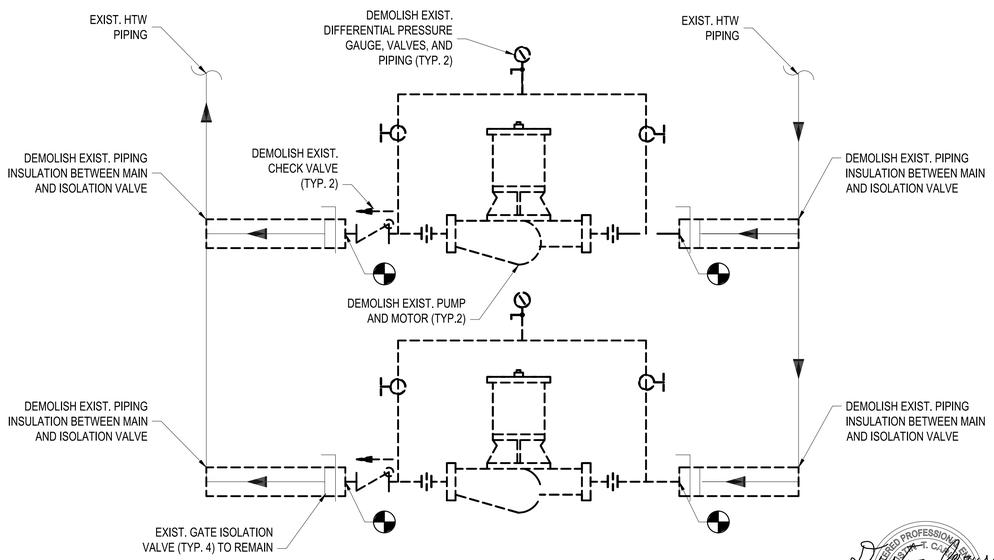

5 MD401 EXIST. ATTIC BOILER INLINE PUMPS DEMOLITION DETAIL

SCALE: NTS

GENERAL NOTES

1. THE DEMOLITION PLAN AND EXISTING CONDITIONS ARE APPROXIMATE. ITEMS TO BE REMOVED ARE DESIGNATED BY HATCHING AND DASHED LINES. OTHER ITEMS ARE INTENDED TO REMAIN IN PLACE UNLESS NOTED OTHERWISE.

(X) KEYED NOTES

1. DEMOLISH EXISTING BOILER (B-6), COMBUSTION AIR INTAKE FILTER, BOILER PRIMARY CIRCULATION PUMP, AND ALL OTHER APPURTENANCES. DEMOLISH EXISTING HEATING WATER PIPING UP TO BOILER ISOLATION VALVES.
2. DEMOLISH EXISTING BOILER (B-7), COMBUSTION AIR INTAKE FILTER, BOILER PRIMARY CIRCULATION PUMP, AND ALL OTHER APPURTENANCES. DEMOLISH EXISTING HEATING WATER PIPING UP TO BOILER ISOLATION VALVES.
3. DEMOLISH EXISTING BOILER (B-8), COMBUSTION AIR INTAKE FILTER, BOILER PRIMARY CIRCULATION PUMP, HOUSEKEEPING PAD, AND ALL OTHER APPURTENANCES. DEMOLISH EXISTING HEATING WATER PIPING UP TO BOILER ISOLATION VALVES.
4. DEMOLISH EXISTING BASE MOUNTED HEATING WATER PUMP (HWP 1-1). DEMOLISH EXISTING HEATING WATER PIPING UP TO PUMP SUCTION ISOLATION VALVE. EXISTING PUMP MUST BE TURNED OVER TO THE GOVERNMENT AND DELIVER TO A LOCATION ON SITE DETERMINED BY THE CONTRACTING OFFICER.
5. DEMOLISH EXISTING BASE MOUNTED HEATING WATER PUMP (HWP 1-2). DEMOLISH EXISTING HEATING WATER PIPING UP TO PUMP SUCTION ISOLATION VALVE. EXISTING PUMP MUST BE TURNED OVER TO THE GOVERNMENT AND DELIVER TO A LOCATION ON SITE DETERMINED BY THE CONTRACTING OFFICER.
6. DEMOLISH EXISTING INLINE HEATING WATER PUMP. EXISTING PUMP MUST BE TURNED OVER TO THE GOVERNMENT AND DELIVER TO A LOCATION ON SITE DETERMINED BY THE CONTRACTING OFFICER.
7. DEMOLISH EXISTING 1-1/2" NATURAL GAS PIPING UP TO EXISTING MAIN. DEMOLISH EXISTING BOILER ISOLATION VALVES AND REGULATORS.
8. DEMOLISH EXISTING 1-1/2" NATURAL GAS PIPING UP TO EXISTING ISOLATION VALVE. DEMOLISH EXISTING BOILER ISOLATION VALVES AND REGULATORS.
9. DEMOLISH EXISTING 4" HTWS PIPING FROM CONNECTION TO PUMPS UP TO CONENCTION TO TEE. REMOVE AND PROTECT EXISTING SENSORS INSTALLED IN PIPING RUN TO BE DEMOLISHED FOR INSTALLATION IN NEW WORK.

GRAPHIC SCALE

0 2' 4' 8' 12'

SCALE: 1/4"= 1'-0"

NO.	DATE	BY	DESCRIPTION

REVISIONS

The Johnson • Mc Adams PPM PA
ARCHITECTS/ENGINEERS • PLANNING • SURVEYING • MANAGEMENT
P.O. BOX 513, GREENWOOD, MISSISSIPPI ~ (662) 455-4943

REGISTERED PROFESSIONAL ENGINEER — DUSTIN T. CAMPBELL — M21370 — MECHANICAL — STATE OF CALIFORNIA

2/19/26

A–E FIRM	USDA
PROJECT MANAGER	EPM
DTC	TG
DESIGNER	PPM
ETM	XXX
CHECKED BY	SAFETY & HEALTH
DTC	XXX
JOB #	REAL PROPERTY
1525	XXX

USDA Agricultural Research Service

USDA AGRICULTURAL RESEARCH SERVICE
BOILER UPGRADES DESIGN (CONTRACT 1)
WESTERN REGIONAL RESEARCH CENTER (WRRC)
ALBANY, CA

ENLARGED MECHANICAL DEMOLITION PLANS

PROJECT NO.	AGRICULTURAL RESEARCH SERVICE USDA/ARS, PA	SHEET
XXX	800 BUCHANNAN STREET ALBANY, CA	MD401
DATE 2/19/2026		7 OF 22

J:\Vet1\Albany\2025_Jobs\1525 USDA Boiler Upgrades - WRRC Albany CA\07 Working Folder\Mech\Final\Drawings\Contract 1\MD401.dwg
Feb 19, 2026 - 5:20pm

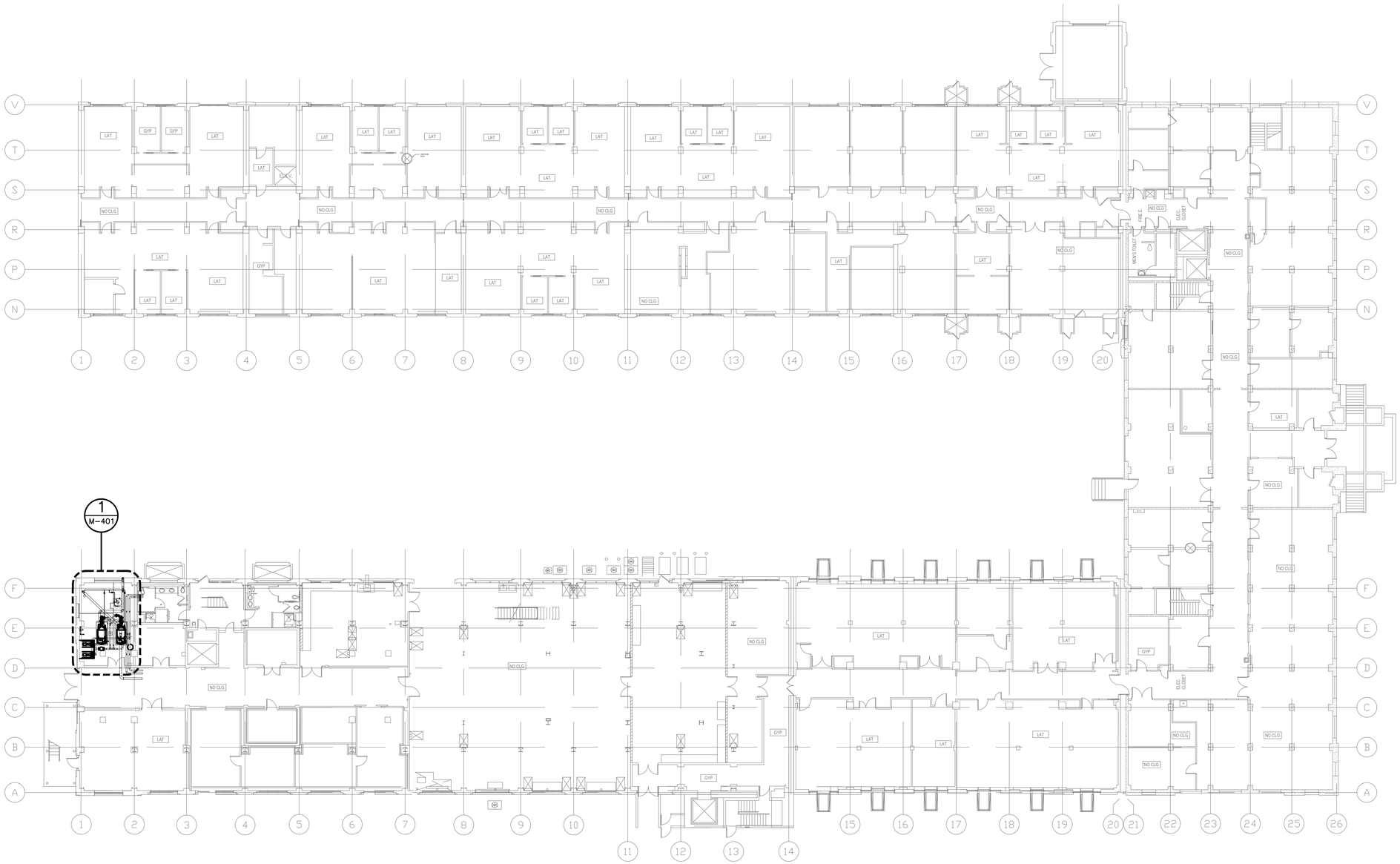

1 M-101 MAIN BUILDING BASEMENT MECHANICAL NEW WORK PLAN

SCALE: 1/16" = 1'-0"

GENERAL NOTES

1. MECHANICAL SYSTEMS AND EQUIPMENT SHOWN ON THIS DRAWING ARE APPROXIMATE. CONTRACTOR SHALL FIELD VERIFY ALL EXISTING CONDITIONS.

GRAPHIC SCALE

0 8' 16' 32' 48'

SCALE: 1/16" = 1'-0"

NO.	DATE	BY	DESCRIPTION

REVISIONS

THE Johnson • Mc Adams FIRM P.A.
ARCHITECTS/ENGINEERS • PLANNING • SURVEYING • MANAGEMENT
P.O. BOX 513, GREENWOOD, MISSISSIPPI – (662) 455-4943

A–E FIRM	USDA
PROJECT MANAGER DTC	EPM TG
DESIGNER ETM	PPM XXX
CHECKED BY DTC	SAFETY & HEALTH XXX
JOB # 1525	REAL PROPERTY XXX

USDA Agricultural Research Service

USDA AGRICULTURAL RESEARCH SERVICE
BOILER UPGRADES DESIGN (CONTRACT 1)
WESTERN REGIONAL RESEARCH CENTER (WRRC)
ALBANY, CA

MAIN BUILDING BASEMENT OVERALL MECHANICAL NEW WORK PLAN

PROJECT NO. XXX	AGRICULTURAL RESEARCH SERVICE USDA/ARS, PA	SHEET M-101
DATE 2/19/2026	800 BUCHANNAN STREET ALBANY, CA	8 OF 22

REGISTERED PROFESSIONAL ENGINEER
M42132
MECHANICAL
STATE OF CALIFORNIA
2/19/26

J:\hattiesburg\2025 Jobs\1525 USDA Boiler Upgrades – WRRC Albany CA\07 Working Folder\Mech\Final\Drawings\Contract 1\M-101.dwg
Feb 19, 2026 – 5:20pm

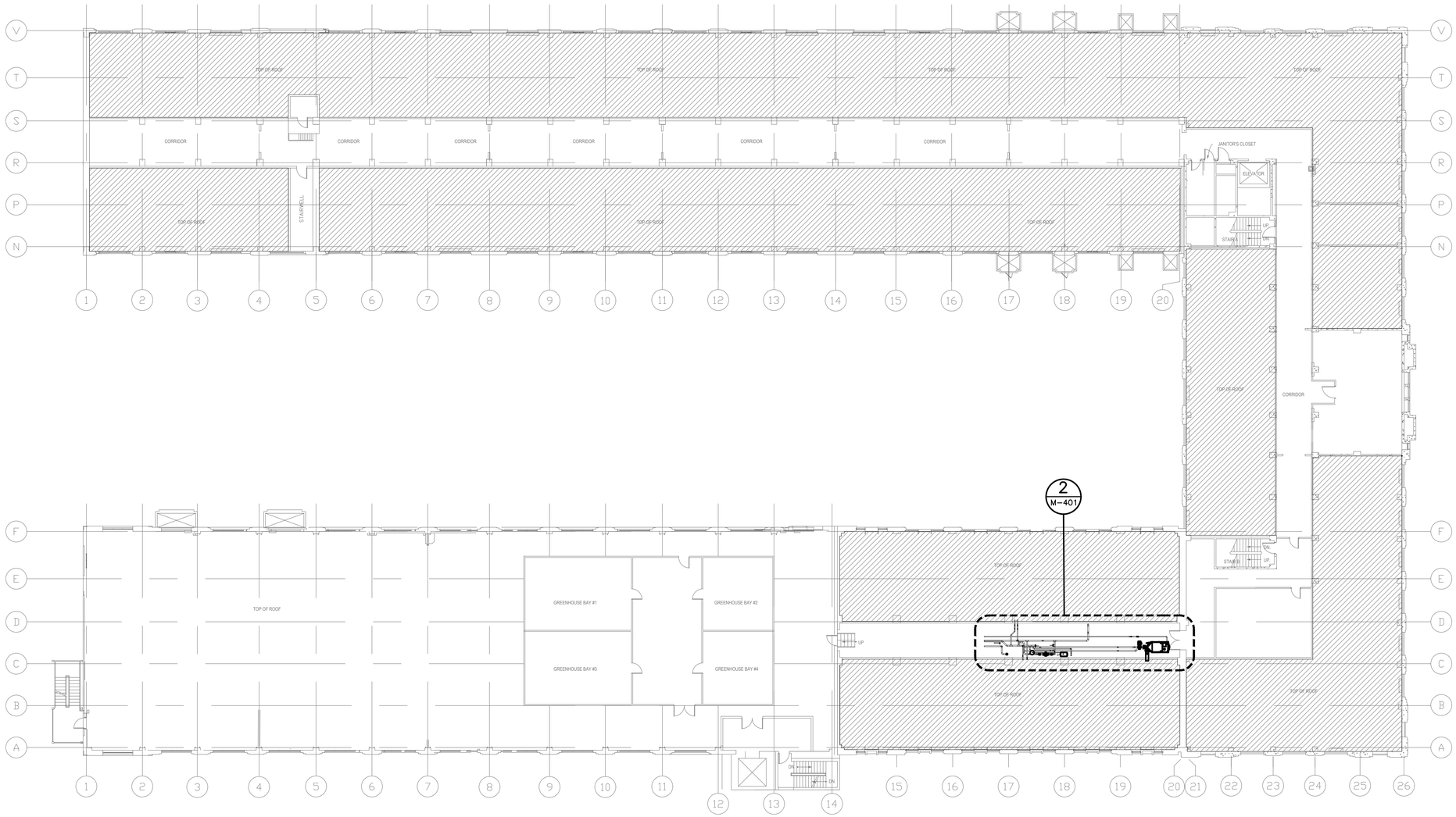

1 M-102 MAIN BUILDING ATTIC MECHANICAL NEW WORK PLAN

SCALE: 1/16" = 1'-0"

GENERAL NOTES

1. MECHANICAL SYSTEMS AND EQUIPMENT SHOWN ON THIS DRAWING ARE APPROXIMATE. CONTRACTOR SHALL FIELD VERIFY ALL EXISTING CONDITIONS.

GRAPHIC SCALE

0 8' 16' 32' 48'

SCALE: 1/16" = 1'-0"

NO.	DATE	BY	DESCRIPTION

REVISIONS

THE Johnson • McAdams FIRM P.A.
ARCHITECTS/ENGINEERS • PLANNING • SURVEYING • MANAGEMENT
P.O. BOX 513, GREENWOOD, MISSISSIPPI – (662) 455-4943

A–E FIRM	USDA
PROJECT MANAGER DTC	EPM TG
DESIGNER ETM	PPM XXX
CHECKED BY DTC	SAFETY & HEALTH XXX
JOB # 1525	REAL PROPERTY XXX

USDA Agricultural Research Service

USDA AGRICULTURAL RESEARCH SERVICE
BOILER UPGRADES DESIGN (CONTRACT 1)
WESTERN REGIONAL RESEARCH CENTER (WRRC)
ALBANY, CA

MAIN BUILDING ATTIC OVERALL
MECHANICAL NEW WORK PLAN

PROJECT NO. XXX	AGRICULTURAL RESEARCH SERVICE USDA/ARS, PA	SHEET M-102
DATE 2/19/2026	800 BUCHANNAN STREET ALBANY, CA	9 OF 22

REGISTERED PROFESSIONAL ENGINEER
STATE OF CALIFORNIA
M42130
2/19/26

J:\hattiesburg\2025 Jobs\1525 USDA Boiler Upgrades – WRRC Albany CA\07 Working Folder\Mech\Final\Drawings\Contract 1\M-102.dwg
Feb 19, 2026 – 5:20pm

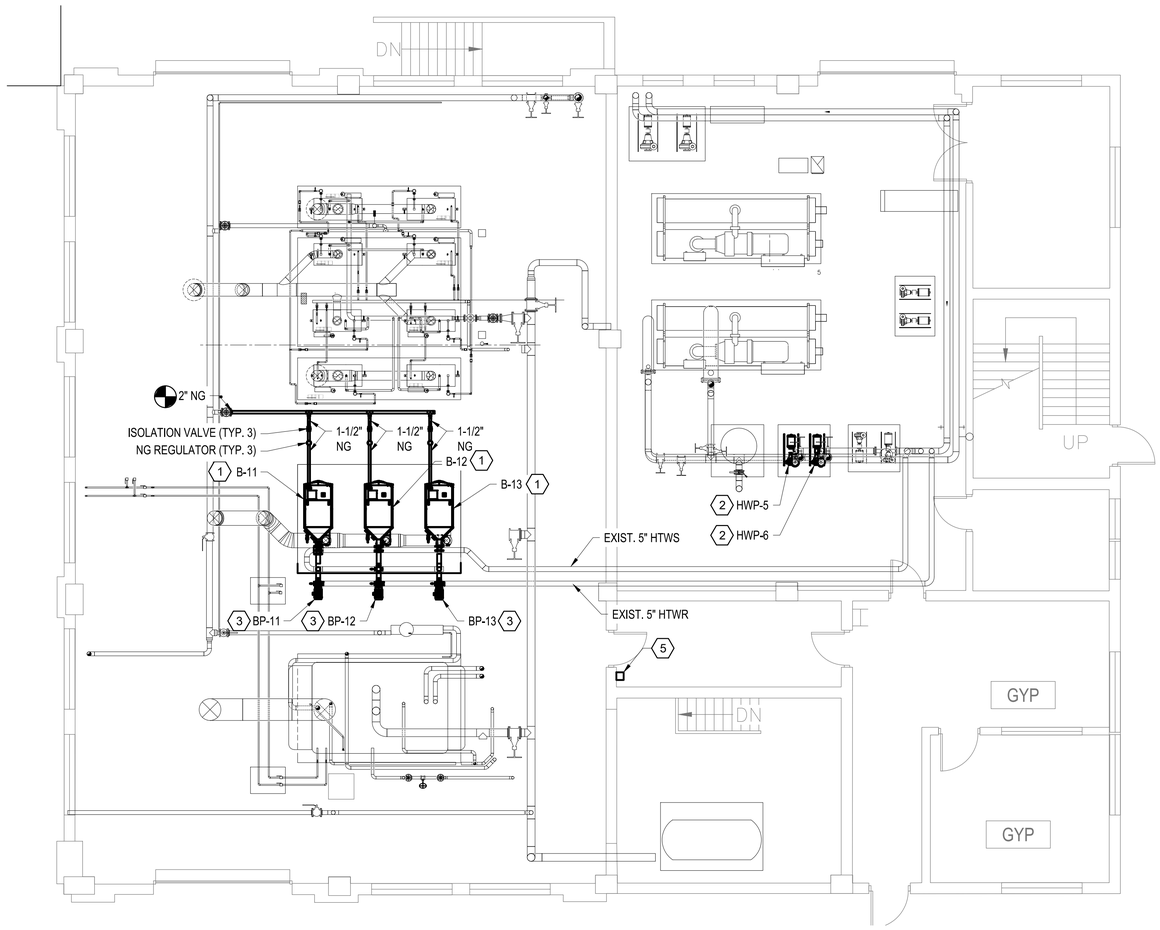

1 M-103 SERVICE BUILDING MECHANICAL NEW WORK PLAN

SCALE: 3/16" = 1'-0"

NOTES:
1. MAKE FINAL CONNECTIONS TO EQUIPMENT. COORDINATE INSTALLATION, CONNECTIONS, AND LOCATIONS WITH ACTUAL EQUIPMENT SUPPLIED AND WITH MANUFACTURER'S REQUIREMENTS.
2. CONTRACTOR MUST FIELD VERIFY EXISTING PIPING SIZES PRIOR TO ORDERING ANY PIPING, VALVES, OR FITTINGS.

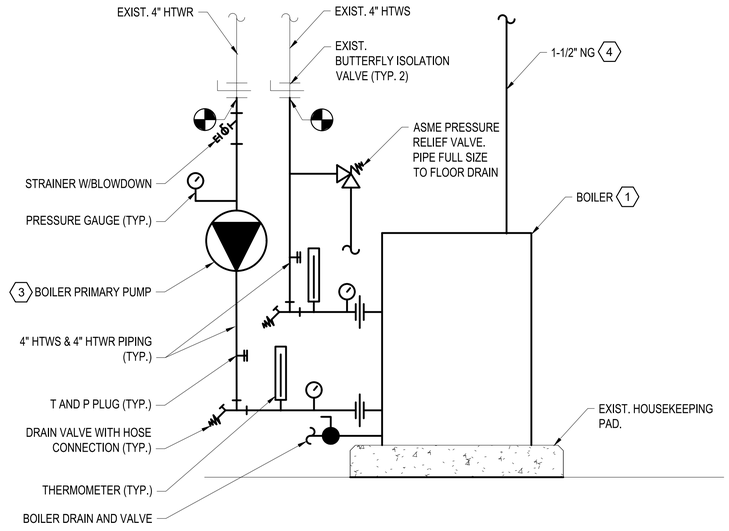

2 M-103 B-11, B-12, & B-13 INSTALLATION DETAIL

SCALE: NTS

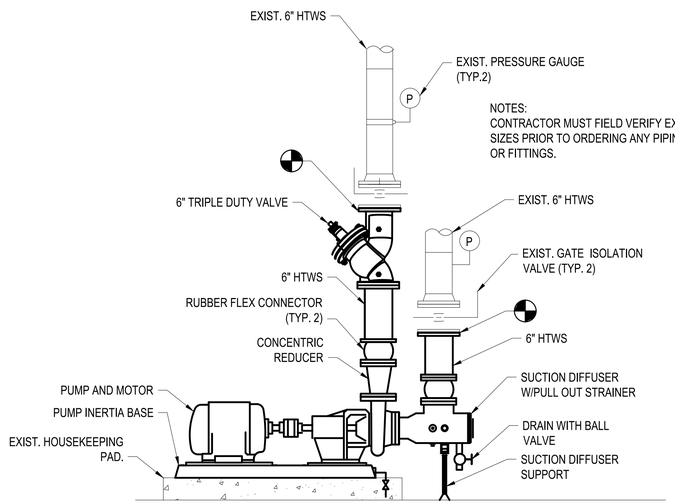

3 M-103 HWP-5 AND HWP-6 DETAIL

SCALE: NTS

GENERAL NOTES

1. MECHANICAL SYSTEMS AND EQUIPMENT SHOWN ON THIS DRAWING ARE APPROXIMATE. CONTRACTOR SHALL FIELD VERIFY ALL EXISTING CONDITIONS.

(X) KEYED NOTES

1. PROVIDE NATURAL GAS FIRED HIGH-EFFICIENCY CONDENSING BOILER, CONDENSATE NEUTRALIZER, AND ALL OTHER APPURTENANCES. INSTALL PER MANUFACTURER'S REQUIREMENTS. RECONNECT TO EXISTING FLUE VENT PIPING. RECONNECT TO EXISTING HTW PIPING AS SHOWN IN DETAIL 2/M-103. INTEGRATE BOILER INTO EXISTING CONTROL SYSTEM. ALL EXISTING POINTS AND CONTROL CAPABILITIES MUST BE MAINTAINED.
2. PROVIDE BASE MOUNTED HEATING WATER PUMP, AND ALL OTHER APPURTENANCES. INSTALL PER MANUFACTURER'S REQUIREMENTS. RECONNECT TO EXISTING HTWS PIPING AS SHOWN IN DETAIL 3/M-103. INTEGRATE PUMP INTO EXISTING CONTROL SYSTEM. ALL EXISTING POINTS AND CONTROL CAPABILITIES MUST BE MAINTAINED.
3. PROVIDE INLINE HEATING WATER PUMP, AND ALL OTHER APPURTENANCES. INSTALL PER MANUFACTURER'S REQUIREMENTS. INTEGRATE PUMP INTO EXISTING CONTROL SYSTEM. ALL EXISTING POINTS AND CONTROL CAPABILITIES MUST BE MAINTAINED.
4. CONNECT NEW 1-1/2" NG PIPING TO BOILER. PROVIDE ISOLATION VALVE, PRESSURE REGULATOR, AND DRIP LEG. SEE DETAIL 1/M-501.
5. PROVIDE ASME CSD-1 COMPLIANT BOILER EMERGENCY SHUTDOWN SWITCH. SWITCH SHALL BE CONNECTED TO B-11, B-12, AND B-13. INSTALL PUSH BUTTON IN A PROTECTIVE POLYCARBONATE ENCLOSURE (SIMILAR TO STI UNIVERSAL STOPPER).

GRAPHIC SCALE

0 2' 4' 8' 16'

SCALE: 3/16"= 1'-0"

NO.	DATE	BY	DESCRIPTION

REVISIONS

The Johnson • McAdams PSC
ARCHITECTS/ENGINEERS • PLANNING • SURVEYING • MANAGEMENT
P.O. BOX 513, GREENWOOD, MISSISSIPPI • (662) 455-4443

A–E FIRM	USDA
PROJECT MANAGER DTC	EPM TG
DESIGNER ETM	PPM XXX
CHECKED BY DTC	SAFETY & HEALTH XXX
JOB # 1525	REAL PROPERTY XXX

REGISTERED PROFESSIONAL ENGINEER — T. CAMERON DUKE — 22199 — MECHANICAL — STATE OF CALIFORNIA
2/19/26

USDA Agricultural Research Service

USDA AGRICULTURAL RESEARCH SERVICE
BOILER UPGRADES DESIGN (CONTRACT 1)
WESTERN REGIONAL RESEARCH CENTER (WRRC)
ALBANY, CA

SERVICE BUILDING
MECHANICAL NEW WORK PLAN

PROJECT NO.	AGRICULTURAL RESEARCH SERVICE USDA/ARS, PA	SHEET
XXX	800 BUCHANNAN STREET ALBANY, CA	M-103
DATE 2/19/2026		10 OF 22

J:\hotlesberg\2025 Jobs\1525 USDA Boiler Upgrades – WRRC Albany CA\07 Working Folder\Mech\Final\Drawings\Contract 1\M-103.dwg
Feb 19, 2026 - 5:20pm

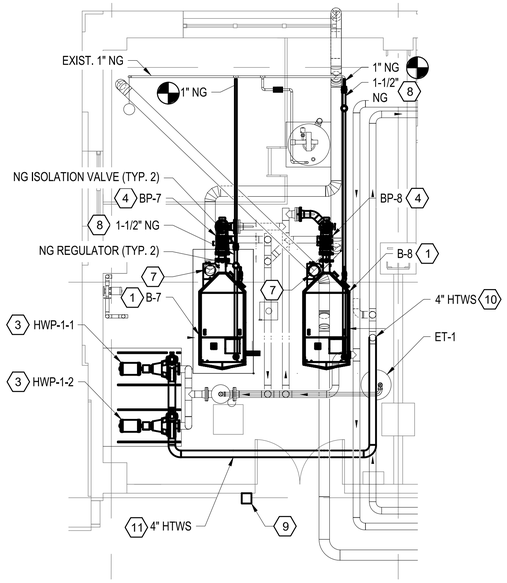

1 M-401 MAIN BUILDING BASEMENT ENLARGED MECHANICAL NEW WORK PLAN

SCALE: 1/4" = 1'-0"

NOTES:
1. MAKE FINAL CONNECTIONS TO EQUIPMENT. COORDINATE INSTALLATION, CONNECTIONS, AND LOCATIONS WITH ACTUAL EQUIPMENT SUPPLIED AND WITH MANUFACTURER'S REQUIREMENTS.
2. CONTRACTOR MUST FIELD VERIFY EXISTING PIPING SIZES PRIOR TO ORDERING ANY PIPING, VALVES, OR FITTINGS.

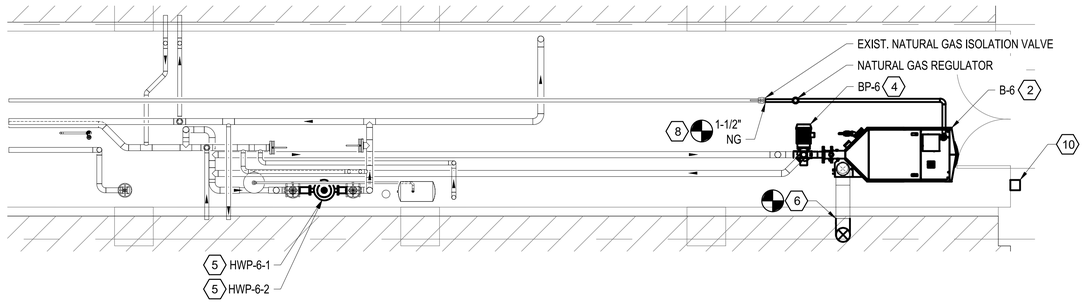

2 M-401 MAIN BUILDING ATTIC ENLARGED MECHANICAL NEW WORK PLAN

SCALE: 1/4" = 1'-0"

NOTES:
CONTRACTOR MUST FIELD VERIFY EXISTING PIPING SIZES PRIOR TO ORDERING ANY PIPING, VALVES, OR FITTINGS.

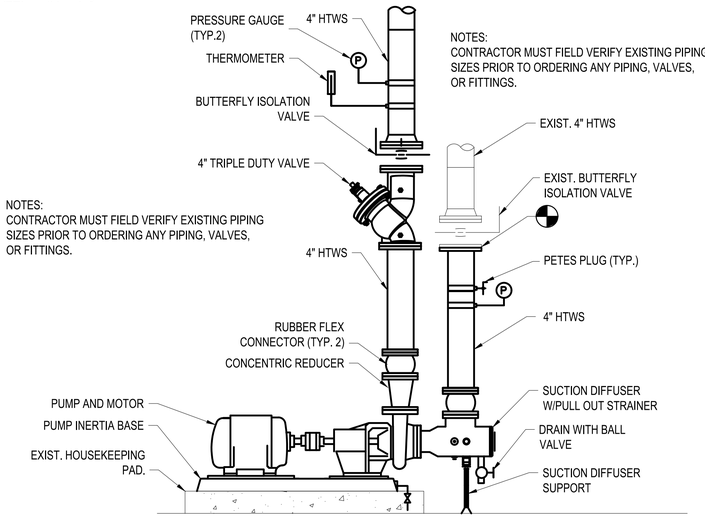

4 M-401 HWP 1-1 AND HWP 1-2 DETAIL

SCALE: NTS

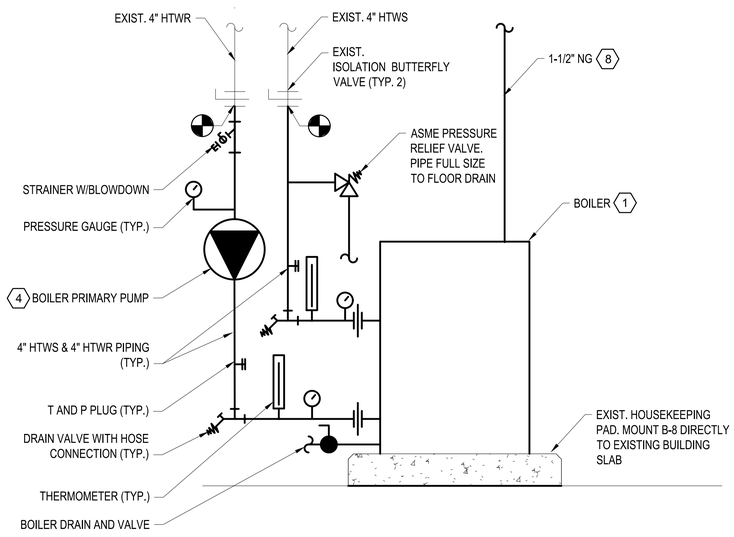

3 M-401 B-6, B-7 & B-8 INSTALLATION DETAIL

SCALE: NTS

PROVIDE NEW PIPING INSULATION BETWEEN MAIN AND ISOLATION VALVE. THIS NOTE DOES NOT OMIT REQUIREMENT FOR INSULATION ON ALL OTHER PIPING. THIS NOTE IS INDICATING THE REQUIREMENT FOR THE INSULATION OF EXISTING PIPING TO REMAIN.

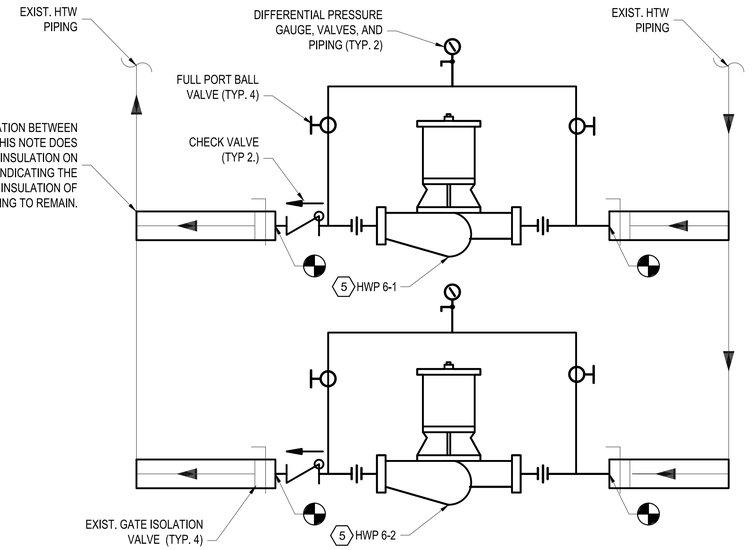

5 M-401 ATTIC BOILER INLINE PUMPS DETAIL

SCALE: NTS

NOTES:
CONTRACTOR MUST FIELD VERIFY EXISTING PIPING SIZES PRIOR TO ORDERING ANY PIPING, VALVES, OR FITTINGS.

GENERAL NOTES

1. MECHANICAL SYSTEMS AND EQUIPMENT SHOWN ON THIS DRAWING ARE APPROXIMATE. CONTRACTOR SHALL FIELD VERIFY ALL EXISTING CONDITIONS.

(X) KEYED NOTES

1. PROVIDE NATURAL GAS FIRED HIGH-EFFICIENCY CONDENSING BOILER, CONDENSATE NEUTRALIZER, AND ALL OTHER APPURTENANCES. INSTALL PER MANUFACTURER'S REQUIREMENTS. RECONNECT TO EXISTING FLUE VENT PIPING. RECONNECT TO EXISTING HTW PIPING AS SHOWN IN DETAIL 3/M-401. INTEGRATE BOILER INTO EXISTING CONTROL SYSTEM. ALL EXISTING POINTS AND CONTROL CAPABILITIES MUST BE MAINTAINED.
2. PROVIDE NATURAL GAS FIRED HIGH-EFFICIENCY CONDENSING BOILER, CONDENSATE NEUTRALIZER, AND ALL OTHER APPURTENANCES. INSTALL PER MANUFACTURER'S REQUIREMENTS. RECONNECT TO EXISTING FLUE VENT PIPING. RECONNECT TO EXISTING HTW PIPING AS SHOWN IN DETAIL 3/M-401. INTEGRATE BOILER INTO EXISTING CONTROL SYSTEM. ALL EXISTING POINTS AND CONTROL CAPABILITIES MUST BE MAINTAINED.
3. PROVIDE BASE MOUNTED HEATING WATER PUMP, AND ALL OTHER APPURTENANCES. INSTALL PER MANUFACTURER'S REQUIREMENTS. RECONNECT TO EXISTING HTWS PIPING AS SHOWN IN DETAIL 4/M-401. INTEGRATE PUMP INTO EXISTING CONTROL SYSTEM. ALL EXISTING POINTS AND CONTROL CAPABILITIES MUST BE MAINTAINED.
4. PROVIDE INLINE HEATING WATER PUMP. INSTALL PER MANUFACTURER'S REQUIREMENTS. INTEGRATE PUMP INTO EXISTING CONTROL SYSTEM. ALL EXISTING POINTS AND CONTROL CAPABILITIES MUST BE MAINTAINED.
5. PROVIDE INLINE HEATING WATER PUMP (TYP. 2). SEE DETAIL 5/M-401.INTEGRATE PUMP INTO EXISTING CONTROL SYSTEM. ALL EXISTING POINTS AND CONTROL CAPABILITIES MUST BE MAINTAINED.
6. PROVIDE 6" UL-1738 CATEGORY IV LISTED AND LABELED DOUBLE WALL STAINLESS STEEL BOILER FLUE. CONNECT TO EXISTING FLUE ON THE EXTERIOR PENETRATION. PROVIDE ELBOW TO EXTEND FLUE 3' ABOVE ADJACENT ROOF GRAVITY INTAKE. INSTALL PER BOILER MANUFACTURER'S INSTALLATION INSTRUCTIONS. PROVIDE MANUFACTURER APPROVED RAIN CAP AT POINT OF DISCHARGE.
7. CONNECT BOILER TO EXISTING BOILER FLUE.
8. CONNECT NEW 1-1/2" NG PIPING TO BOILER. PROVIDE ISOLATION VALVE, PRESSURE REGULATOR, AND DRIP LEG. SEE DETAIL 1/M-501.
9. PROVIDE ASME CSD-1 COMPLIANT BOILER EMERGENCY SHUTDOWN SWITCH. SWITCH SHALL BE CONNECTED TO B-7 AND B-8. INSTALL PUSH BUTTON IN A PROTECTIVE POLYCARBONATE ENCLOSURE (SIMILAR TO STI UNIVERSAL STOPPER).
10. PROVIDE ASME CSD-1 COMPLIANT BOILER EMERGENCY SHUTDOWN SWITCH. SWITCH SHALL BE CONNECTED TO B-6. INSTALL PUSH BUTTON IN A PROTECTIVE POLYCARBONATE ENCLOSURE (SIMILAR TO STI UNIVERSAL STOPPER).
11. CONNECT 4" HTWS TO EXISTING TEE AND ROUTE TO DISCHARGE SIDE OF PUMPS. INSTALL EXISTING SENSORS IN NEW PIPING.

GRAPHIC SCALE

0 2' 4' 8' 12'

SCALE: 1/4"= 1'-0"

THE Johnson + Mc Adams FIRM
ARCHITECTS, ENGINEERS + PLANNING + SURVEYING + MANAGEMENT
P.O. BOX 513, GREENWOOD, MISSISSIPPI ~ (662) 455-4643

NO.	DATE	BY	DESCRIPTION

REVISIONS

A-E FIRM	USDA
PROJECT MANAGER	EPM
DTC	TG
DESIGNER	PPM
ETM	XXX
CHECKED BY	SAFETY & HEALTH
DTC	XXX
JOB #	REAL PROPERTY
1525	XXX

USDA Agricultural Research Service

USDA AGRICULTURAL RESEARCH SERVICE
BOILER UPGRADES DESIGN (CONTRACT 1)
WESTERN REGIONAL RESEARCH CENTER (WRRC)
ALBANY, CA

ENLARGED
MECHANICAL NEW WORK PLANS

PROJECT NO. XXX	AGRICULTURAL RESEARCH SERVICE USDA/ARS, PA 800 BUCHANNAN STREET ALBANY, CA	SHEET M-401
DATE 2/19/2026		11 OF 22

REGISTERED PROFESSIONAL ENGINEER
DUSTIN T. CARUSO
No. M32179
MECHANICAL
STATE OF CALIFORNIA

2/19/26

J:\Vicksburg\2025 Jobs\1525 USDA Boiler Upgrades - WRRC Albany CA\07 Working Folder\Mech\Final\Drawings\Contract 1\M-401.dwg
Feb 19, 2026 - 5:20pm

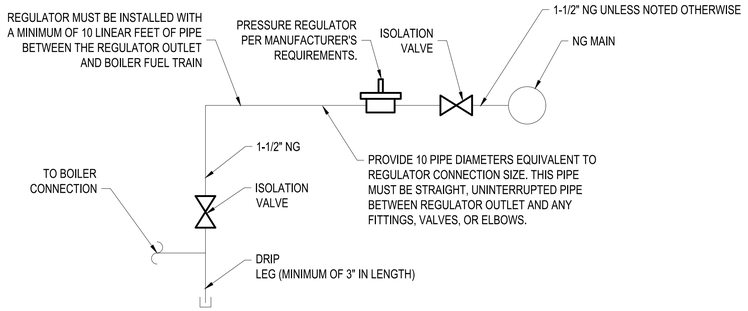

1 M-501 BOILER NATURAL GAS CONNECTION DETAIL
SCALE: NTS

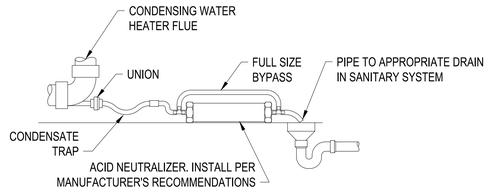

2 M-501 CONDENSATE ACID NEUTRALIZER DETAIL
SCALE: NTS

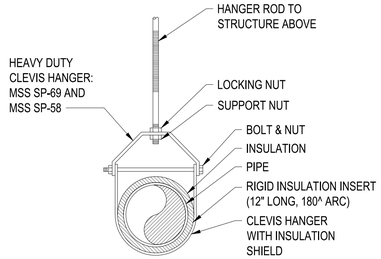

3 M-501 CLEVIS HANGER DETAIL
SCALE: NOT TO SCALE

J:\hattiesburg\2025 Jobs\1525 USDA Boiler Upgrades - WRRC Albany CA\07 Working Folder\Mech\Final\Drawings\Contract 1\M-501.dwg
Feb 19, 2026 - 5:20pm

THE Johnson • McAdams FIRM P.A.
ARCHITECTS/ENGINEERS • PLANNING • SURVEYING • MANAGEMENT
P.O. BOX 513, GREENWOOD, MISSISSIPPI - (662) 455-4943

NO.	DATE	BY	DESCRIPTION

REVISIONS

A-E FIRM	USDA
PROJECT MANAGER DTC	EPM TG
DESIGNER ETM	PPM XXX
CHECKED BY DTC	SAFETY & HEALTH XXX
JOB # 1525	REAL PROPERTY XXX

USDA Agricultural Research Service

USDA AGRICULTURAL RESEARCH SERVICE
BOILER UPGRADES DESIGN (CONTRACT 1)
WESTERN REGIONAL RESEARCH CENTER (WRRC)
ALBANY, CA

MECHANICAL DETAILS

PROJECT NO. XXX	AGRICULTURAL RESEARCH SERVICE USDA/ARS, PA	SHEET M-501
DATE 2/19/2026	800 BUCHANNAN STREET ALBANY, CA	12 OF 22

REGISTERED PROFESSIONAL ENGINEER
DAVID T. CARUSO
M42130
MECHANICAL
STATE OF CALIFORNIA
2/19/26

PUMP SCHEDULE

MARK	BASIS OF DESIGN	TYPE	SERVES	IMPELLER SIZE (IN)	FLUID DATA			ELECTRICAL DATA			MIN. DUTY POINT EFFICIENCY	REMARKS
					FLOW (GPM)	HEAD (FT)	FLUID TYPE	MIN. MOTOR HP	MOTOR RPM	VOLTS/ PHASE		
HWP-1-1	BELL & GOSSETT	BASE MOUNTED END SUCTION	B-7, B-8	12	243	100	WATER	15	1800	208/3	68.6%	SEE NOTES
HWP-1-2	BELL & GOSSETT	BASE MOUNTED END SUCTION	B-7, B-8	12	243	100	WATER	15	1800	208/3	68.6%	SEE NOTES
HWP-6-1	BELL & GOSSETT	INLINE SUCTION	B-6	9.375	122	75	WATER	5	1800	208/3	61.1%	SEE NOTES
HWP-6-2	BELL & GOSSETT	INLINE SUCTION	B-6	9.375	122	75	WATER	5	1800	208/3	61.1%	SEE NOTES
HWP-5	BELL & GOSSETT	BASE MOUNTED END SUCTION	B-11, B-12, B-13	12.625	480	135	WATER	25	1800	460/3	75.1%	SEE NOTES
HWP-6	BELL & GOSSETT	BASE MOUNTED END SUCTION	B-11, B-12, B-13	12.625	480	135	WATER	25	1800	460/3	75.1%	SEE NOTES
BP-6	BELL & GOSSETT	INLINE BOILER PUMP	B-6	5.625	140	20	WATER	1.5	1800	208/3	71.8%	SEE NOTES
BP-7	BELL & GOSSETT	INLINE BOILER PUMP	B-7	5.625	140	20	WATER	1.5	1800	208/3	71.8%	SEE NOTES
BP-8	BELL & GOSSETT	INLINE BOILER PUMP	B-8	5.625	140	20	WATER	1.5	1800	208/3	71.8%	SEE NOTES
BP-11	BELL & GOSSETT	INLINE BOILER PUMP	B-11	5.625	140	20	WATER	1.5	1800	208/3	71.8%	SEE NOTES
BP-12	BELL & GOSSETT	INLINE BOILER PUMP	B-12	5.625	140	20	WATER	1.5	1800	208/3	71.8%	SEE NOTES
BP-13	BELL & GOSSETT	INLINE BOILER PUMP	B-13	5.625	140	20	WATER	1.5	1800	208/3	71.8%	SEE NOTES

NOTES:
1. PROVIDE BASE MOUNTED PUMPS WITH SUCTION DIFFUSERS AND FLANGED RUBBER FLEX CONNECTIONS.
2. ALL MOTORS TO BE NON-OVERLOADING AT ANY POINT ON THE PUMP CURVE.
3. PROVIDE WITH VIBRATION ISOLATION/INERTIA PADS.
4. CONTRACTOR MUST VERIFY BP-6 THROUGH BP-13 REQUIREMENTS WITH BOILER MANUFACTURER. PUMPS MUST BE PROVIDED BY THE BOILER MANUFACTURER AS PART OF THE BOILER PACKAGE.
5. TRIPLE DUTY VALVES PROVIDED ON BASE MOUNTED PUMP DISCHARGE MUST BE SELECTED TO HAVE A MAXIMUM PRESSURE DROP OF 5 FT. HD. AT THE SCHEDULED OPERATING CONDITIONS.

HIGH EFFICIENCY CONDENSING BOILER SCHEDULE

MARK	BASIS OF DESIGN	SERVICE	FUEL TYPE	HEATING DATA										ELECTRICAL DATA		OPER. WEIGHT (LBS)	REMARKS
				INPUT (MBH)	OUTPUT (MBH)	EWT (F)	LWT (F)	TURN DOWN RATIO	GPM	WPD FT. HD	FLUID TYPE	FLUE OUTLET	COMB. INTAKE	NATURAL GAS SUPPLY PRESSURE	MCA	VOLTS/PH		
B-6	LOCHINVAR CREST	HEATING WATER	NATURAL GAS	1,500	1,380	160	180	25:1	350	5.0	WATER	8"	8"	7-14 IN. WC.	13A	120/1	2307	SEE NOTES
B-7	LOCHINVAR CREST	HEATING WATER	NATURAL GAS	1,500	1,380	160	180	25:1	350	5.0	WATER	8"	8"	7-14 IN. WC.	13A	120/1	2307	SEE NOTES
B-8	LOCHINVAR CREST	HEATING WATER	NATURAL GAS	1,500	1,380	160	180	25:1	350	5.0	WATER	8"	8"	7-14 IN. WC.	13A	120/1	2307	SEE NOTES
B-11	LOCHINVAR CREST	HEATING WATER	NATURAL GAS	1,500	1,380	160	180	25:1	350	5.0	WATER	8"	8"	7-14 IN. WC.	13A	120/1	2307	SEE NOTES
B-12	LOCHINVAR CREST	HEATING WATER	NATURAL GAS	1,500	1,380	160	180	25:1	350	5.0	WATER	8"	8"	7-14 IN. WC.	13A	120/1	2307	SEE NOTES
B-13	LOCHINVAR CREST	HEATING WATER	NATURAL GAS	1,500	1,380	160	180	25:1	350	5.0	WATER	8"	8"	7-14 IN. WC.	13A	120/1	2307	SEE NOTES

NOTES:
1. PROVIDE BOILER WITH CONDENSATE NEUTRALIZER KIT. ROUTE CONDENSATE TO FLOOR DRAIN.
2. PROVIDE WITH LCD DISPLAY SCREEN.
3. PROVE WITH 160 PSI MAXIMUM WORKING PRESSURE.
4. PROVIDE WITH FLUE DAMPER KIT.
5. BOILER MUST BE INTEGRATED INTO THE EXISTING CONTROL SYSTEM. THE CONTRACTOR IS RESPONSIBLE FOR PROVIDING ALL HARDWARE, GATEWAYS, SOFTWARE, AND PROGRAMMING NECESSARY TO MAINTAIN ALL EXISTING CONTROL FUNCTIONS AND INTERLOCKS.
6. PROVIDE WITH COMBUSTION AIR INTAKE FILTER.
7. PROVIDE REGULATOR AND BOILER NATURAL GAS ISOLATION VALVE. REGULATOR MUST BE SIZED TO PROVIDE NATURAL GAS SUPPLY PRESSURE TO BOILER AS SCHEDULED. INSTALL PER MANUFACTURER'S INSTALLATION MANUAL AND ALL APPLICABLE CODES AND STANDARDS.
8. PROVIDE ASME CSD-1 COMPLIANT BOILER EMERGENCY SHUTDOWN SWITCH.

THE Johnson • Mc Adams PPM P.A.
ARCHITECTS/ENGINEERS • PLANNING • SURVEYING • MANAGEMENT
P.O. BOX 513, GREENWOOD, MS(555)PPI – (662) 455-4943

REVISIONS

NO.	DATE	BY	DESCRIPTION

REGISTERED PROFESSIONAL ENGINEER — T. CAMERON CRUSO — 42132 — MECHANICAL — STATE OF CALIFORNIA
2/19/26

A–E FIRM	USDA
PROJECT MANAGER	EPM
DTC	TG
DESIGNER	PPM
ETM	XXX
CHECKED BY	SAFETY & HEALTH
DTC	XXX
JOB #	REAL PROPERTY
1525	XXX

USDA Agricultural Research Service

USDA AGRICULTURAL RESEARCH SERVICE
BOILER UPGRADES DESIGN (CONTRACT 1)
WESTERN REGIONAL RESEARCH CENTER (WRRC)
ALBANY, CA

MECHANICAL SCHEDULES

PROJECT NO. XXX	AGRICULTURAL RESEARCH SERVICE USDA/ARS, PA	SHEET M-601
DATE 2/19/2026	800 BUCHANNAN STREET ALBANY, CA	13 OF 22

J:\Hattiesburg\2025 Jobs\1525 USDA Boiler Upgrades - WRRC Albany CA\07 Working Folder\Mech\Final\Drawings\Contract 1\M-601.dwg
Feb 19, 2026 - 5:20pm

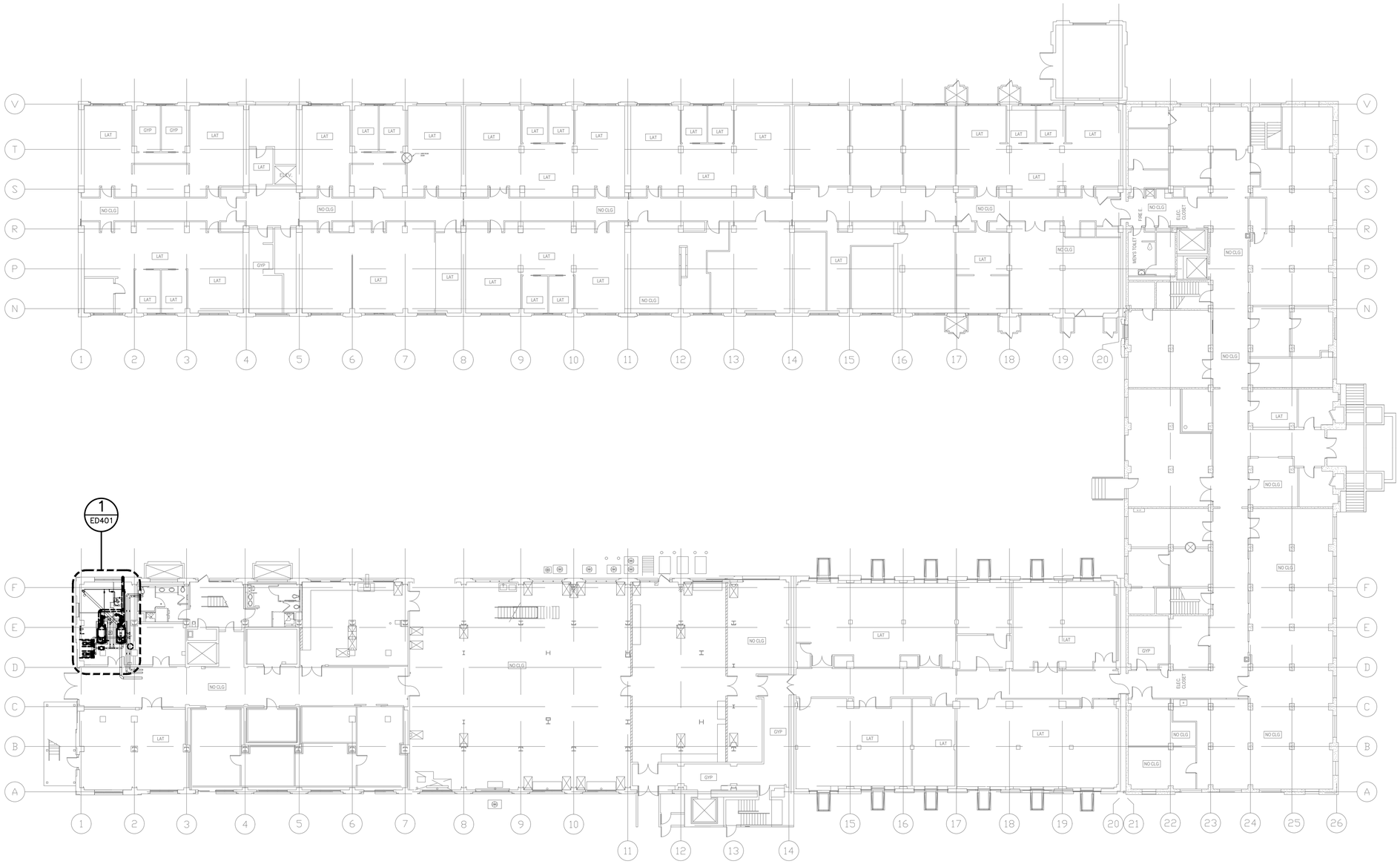

1 ED101 MAIN BUILDING BASEMENT OVERALL ELECTRICAL DEMOLITION PLAN

SCALE: 1/16" = 1'-0"

GENERAL NOTES

A. THE DEMOLITION PLAN AND EXISTING CONDITIONS ARE BASED ON THE BEST INFORMATION AT THE TIME OF DESIGN AND MUST BE FIELD VERIFIED. EQUIPMENT AND CIRCUITRY NOT EXPRESSLY LISTED FOR DEMOLITION SHALL BE EXISTING-TO-REMAIN.

GRAPHIC SCALE

0 8' 16' 32' 48'

SCALE: 1/16" = 1'-0"

NO.	DATE	BY	DESCRIPTION

REVISIONS

THE Johnson • Mc Adams FIRM P.A.
ARCHITECTS/ENGINEERS • PLANNING • SURVEYING • MANAGEMENT
P.O. BOX 510, GREENWOOD, MISSISSIPPI – (662) 455-4943

REGISTERED PROFESSIONAL ENGINEER GREGORY A. CARMICHAEL 20157 ELECTRICAL STATE OF CALIFORNIA 2/19/2026

A–E FIRM	USDA
PROJECT MANAGER	EPM
DTC	TG
DESIGNER	PPM
JCM, JGR	XXX
CHECKED BY	SAFETY & HEALTH
GAC	XXX
JOB #	REAL PROPERTY
1525	XXX

USDA Agricultural Research Service

USDA AGRICULTURAL RESEARCH SERVICE
BOILER UPGRADES DESIGN (CONTRACT 1)
WESTERN REGIONAL RESEARCH CENTER (WRRC)
ALBANY, CA

MAIN BUILDING BASEMENT OVERALL ELECTRICAL DEMOLITION PLAN

PROJECT NO. XXX	AGRICULTURAL RESEARCH SERVICE USDA/ARS, PA	SHEET ED101
DATE 2/19/2026	800 BUCHANNAN STREET ALBANY, CA	14 OF 22

Z:\120225_Projects\25157 – USDA WRRC Boiler Upgrades\drawings\Contract 1\ED101.dwg
Feb 19, 2026 – 4:17pm

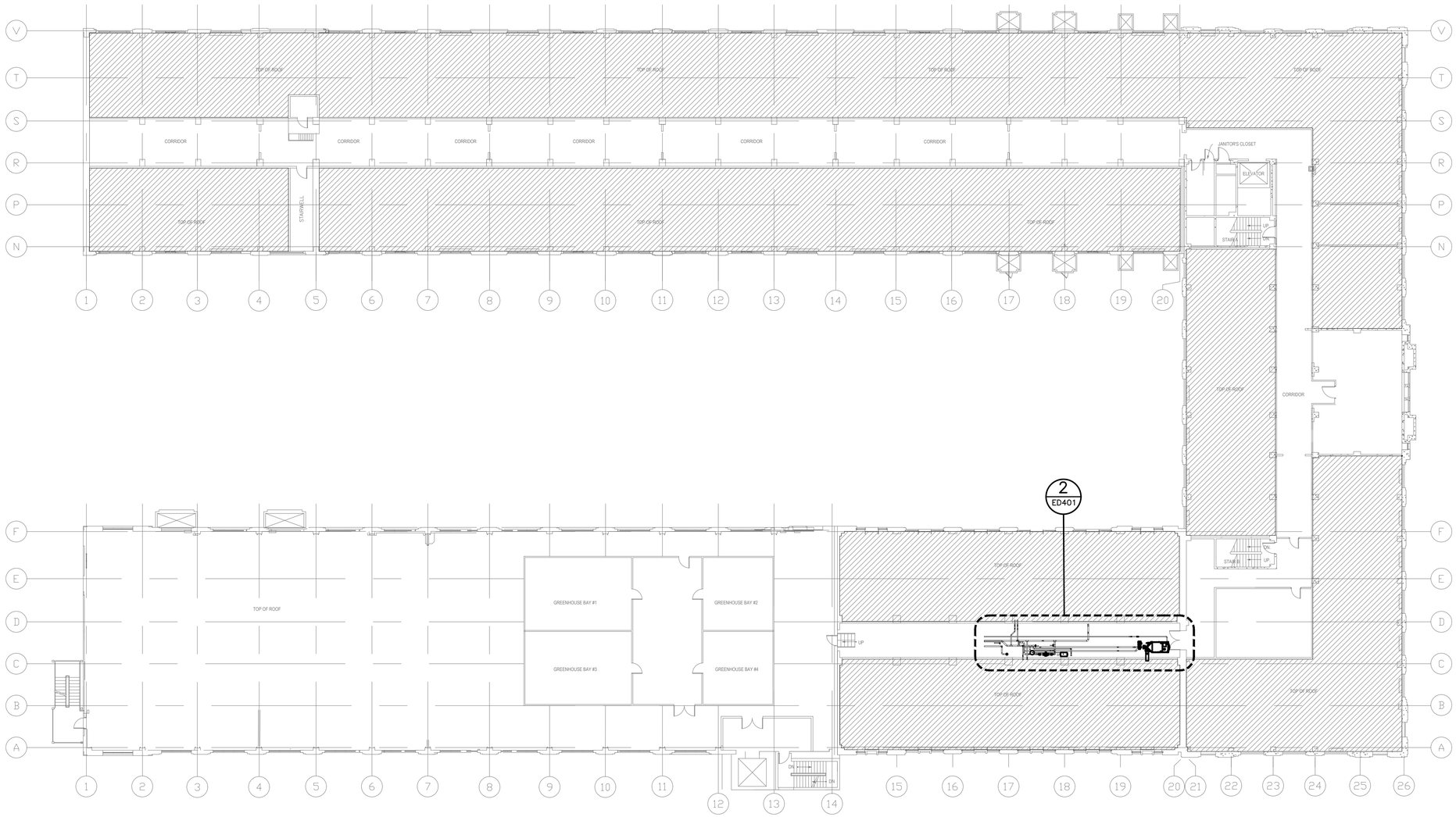

1 ED102 MAIN BUILDING ATTIC OVERALL ELECTRICAL DEMOLITION PLAN

SCALE: 1/16" = 1'-0"

GENERAL NOTES

A. THE DEMOLITION PLAN AND EXISTING CONDITIONS ARE BASED ON THE BEST INFORMATION AT THE TIME OF DESIGN AND MUST BE FIELD VERIFIED. EQUIPMENT AND CIRCUITRY NOT EXPRESSLY LISTED FOR DEMOLITION SHALL BE EXISTING-TO-REMAIN.

GRAPHIC SCALE

0 8' 16' 32' 48'

SCALE: 1/16" = 1'-0"

NO.	DATE	BY	DESCRIPTION

REVISIONS

THE Johnson • McAdams FIRM P.A.
ARCHITECTS/ENGINEERS • PLANNING • SURVEYING • MANAGEMENT
P.O. BOX 513, GREENWOOD, MISSISSIPPI – (662) 455-4943

A–E FIRM	USDA
PROJECT MANAGER DTC	EPM TG
DESIGNER JCM, JGR	PPM XXX
CHECKED BY GAC	SAFETY & HEALTH XXX
JOB # 1525	REAL PROPERTY XXX

USDA Agricultural Research Service

USDA AGRICULTURAL RESEARCH SERVICE
BOILER UPGRADES DESIGN (CONTRACT 1)
WESTERN REGIONAL RESEARCH CENTER (WRRC)
ALBANY, CA

MAIN BUILDING ATTIC OVERALL ELECTRICAL DEMOLITION PLAN

PROJECT NO. XXX	AGRICULTURAL RESEARCH SERVICE USDA/ARS, PA	SHEET ED102
DATE 2/19/2026	800 BUCHANNAN STREET ALBANY, CA	15 OF 22

REGISTERED PROFESSIONAL ENGINEER
GREGORY A. CHAMPION
E20157
ELECTRICAL
STATE OF CALIFORNIA
2/19/2026

Z:\02025_Projects\25157 – USDA WRRC Boiler Upgrades\drawings\Contract 1\ED102.dwg
Feb 19, 2026 – 4:17pm

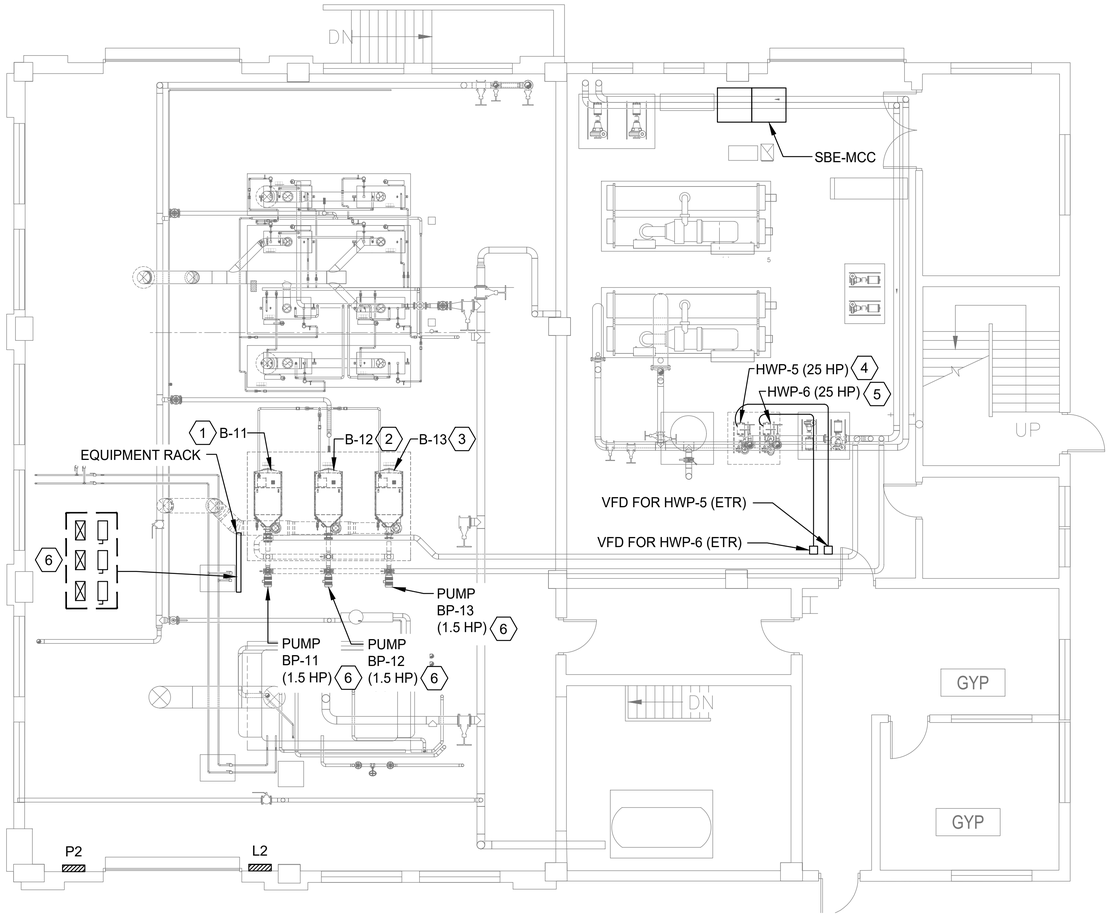

1 ED103 SERVICE BUILDING ELECTRICAL DEMOLITION PLAN

SCALE: 3/16" = 1'-0"

GENERAL NOTES

A. THE DEMOLITION PLAN AND EXISTING CONDITIONS ARE BASED ON THE BEST INFORMATION AT THE TIME OF DESIGN AND MUST BE FIELD VERIFIED. EQUIPMENT AND CIRCUITRY NOT EXPRESSLY LISTED FOR DEMOLITION SHALL BE EXISTING-TO-REMAIN.

B. LOCK OFF ALL UNUSED BREAKERS AND LABEL "SPARE".

C. SEAL UNUSED CONDUIT OPENINGS WITH PLATES EQUIVALENT TO ENCLOSURE MATERIAL AND THICKNESS.

(X) KEYED NOTES

1. DEMOLISH ELECTRICAL CONNECTION TO EXISTING BOILER (B-11) FED THROUGH CONDUIT FROM EQUIPMENT RACK. BOILER (B-11) IS FED FROM A 20/1 BREAKER IN PANEL L2 AT CIRCUIT #18. RETAIN EXISTING RACEWAYS AND CIRCUITRY TO THE EXTENT PRACTICAL.
2. DEMOLISH ELECTRICAL CONNECTION TO EXISTING BOILER (B-12) FED THROUGH CONDUIT FROM EQUIPMENT RACK. BOILER (B-12) IS FED FROM A 20/1 BREAKER IN PANEL L2 AT CIRCUIT #24. RETAIN EXISTING RACEWAYS AND CIRCUITRY TO THE EXTENT PRACTICAL.
3. DEMOLISH ELECTRICAL CONNECTION TO EXISTING BOILER (B-13). BOILER (B-13) IS FED FROM A 20/1 BREAKER IN PANEL L2 AT CIRCUIT #16. RETAIN EXISTING RACEWAYS AND CIRCUITRY TO THE EXTENT PRACTICAL.
4. DEMOLISH ELECTRICAL CONNECTION FROM VFD TO EXISTING PUMP (HWP-5). VFD IS FED FROM SBE-MCC-18. CONDUIT SHALL BE RETAINED AND REUSED. REPLACE FLEXIBLE CONNECTION (APPROXIMATELY 18", FIELD VERIFY PRIOR TO CONSTRUCTION).
5. DEMOLISH ELECTRICAL CONNECTION FROM VFD TO EXISTING PUMP (HWP-6). VFD IS FED FROM SBE-MCC-17. CONDUIT SHALL BE RETAINED AND REUSED. REPLACE FLEXIBLE CONNECTION (APPROXIMATELY 18", FIELD VERIFY PRIOR TO CONSTRUCTION).
6. DEMOLISH CONNECTIONS FROM MOTOR STARTERS TO THE THREE PUMPS (PUMP BP-11, PUMP BP-12, AND PUMP BP-13). RETAIN DISCONNECTS AND MOTOR STARTERS. NOTE: PROVIDE NEW LABELS IN PANEL P2 FOR ALL THREE PUMPS WITH APPROPRIATE NAMES.

GRAPHIC SCALE

0 2' 4' 8' 16'

SCALE: 3/16"= 1'-0"

THE Johnson + Mc Adams FIRM P.A.
ARCHITECTS/ENGINEERS • PLANNING • SURVEYING • MANAGEMENT
P.O. BOX 513, GREENWOOD, MISSISSIPPI • (662) 455-4943

NO.	DATE	BY	DESCRIPTION

REVISIONS

REGISTERED PROFESSIONAL ENGINEER — GREGORY A. CHRISTOPHER — 20157 — ELECTRICAL — STATE OF CALIFORNIA — 2/19/2026

A-E FIRM	USDA
PROJECT MANAGER	EPM
DTC	TG
DESIGNER	PPM
JCM, JGR	XXX
CHECKED BY	SAFETY & HEALTH
GAC	XXX
JOB #	REAL PROPERTY
1525	XXX

USDA Agricultural Research Service

USDA AGRICULTURAL RESEARCH SERVICE
BOILER UPGRADES DESIGN (CONTRACT 1)
WESTERN REGIONAL RESEARCH CENTER (WRRC)
ALBANY, CA

SERVICE BUILDING ELECTRICAL DEMOLITION PLAN

PROJECT NO. XXX	AGRICULTURAL RESEARCH SERVICE USDA/ARS, PA	SHEET ED103
DATE 2/19/2026	800 BUCHANNAN STREET ALBANY, CA	16 OF 22

Z:\10205_Projects\25157 - USDA WRRC Boiler Upgrades\drawings\Contract 1\ED103.dwg
Feb 19, 2026 - 4:17pm

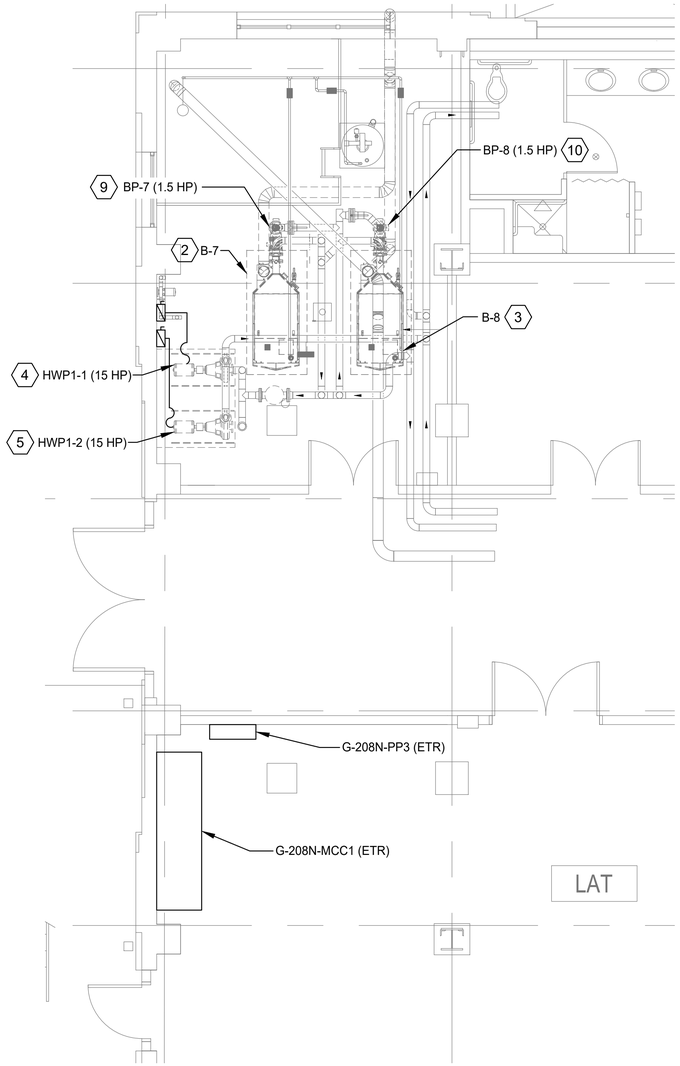

1 ED401 MAIN BUILDING BASEMENT ENLARGED ELECTRICAL DEMOLITION PLAN

SCALE: 1/4" = 1'-0"

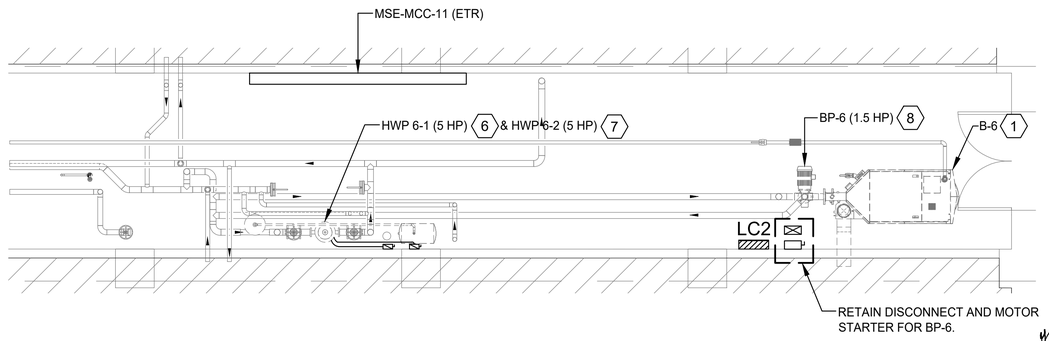

2 ED401 MAIN BUILDING ATTIC ENLARGED ELECTRICAL DEMOLITION PLAN

SCALE: 1/4" = 1'-0"

GENERAL NOTES

1. THE DEMOLITION PLAN AND EXISTING CONDITIONS ARE BASED ON THE BEST INFORMATION AT THE TIME OF DESIGN AND MUST BE FIELD VERIFIED. EQUIPMENT AND CIRCUITRY NOT EXPRESSLY LISTED FOR DEMOLITION SHALL BE EXISTING-TO-REMAIN.

(X) KEYED NOTES

1. DEMOLISH EXISTING CONNECTION TO BOILER (B-6). THE BOILER IS FED FROM A 20/1 BREAKER IN LC2 AT CIRCUIT #27. RETAIN AND REUSE RACEWAYS AND CIRCUITRY TO EXTENT PRACTICAL.
2. DEMOLISH EXISTING CONNECTION TO BOILER (B-7). THE BOILER IS FED FROM A BREAKER IN G-208N-PP3 AT CIRCUIT #11. RETAIN AND REUSE RACEWAYS AND CIRCUITRY TO EXTENT PRACTICAL.
3. DEMOLISH EXISTING CONNECTION TO BOILER (B-8). THE BOILER IS FED FROM A BREAKER IN G-208N-PP3 AT CIRCUIT #9. RETAIN AND REUSE RACEWAYS AND CIRCUITRY TO EXTENT PRACTICAL.
4. DEMOLISH EXISTING CONNECTION TO PUMP (HWP 1-1). RETAIN DISCONNECT. THE PUMP IS FED FROM BUCKET 1C IN G-208N-MCC1. RETAIN AND REUSE RACEWAYS AND CIRCUITRY TO EXTENT PRACTICAL.
5. DEMOLISH EXISTING CONNECTION TO PUMP (HWP 1-2). RETAIN DISCONNECT. THE PUMP IS FED FROM BUCKET 2B IN G-208N-MCC1. RETAIN AND REUSE RACEWAYS AND CIRCUITRY TO EXTENT PRACTICAL.
6. DEMOLISH EXISTING CONNECTION TO INLINE HEATING WATER PUMP 6-1. RETAIN DISCONNECT. PUMP 6-1 IS FED FROM BUCKET 4B OF MSE-MCC-11. RETAIN AND REUSE RACEWAYS AND CIRCUITRY TO EXTENT PRACTICAL.
7. DEMOLISH EXISTING CONNECTION TO INLINE HEATING WATER PUMP 6-2. RETAIN DISCONNECT. PUMP 6-2 IS FED FROM BUCKET 4C OF MSE-MCC-11. RETAIN AND REUSE RACEWAYS AND CIRCUITRY TO EXTENT PRACTICAL.
8. DEMOLISH EXISTING CONNECTION TO BOILER PUMP BP-6. BOILER PUMP BP-6 IS FED FROM A 30/3 BREAKER IN PANEL LC2 AT CIRCUIT #26,28,30. RETAIN AND REUSE RACEWAYS AND CIRCUITRY TO EXTENT PRACTICAL.
9. DEMOLISH EXISTING CONNECTION TO BOILER PUMP BP-7. RETAIN AND REUSE RACEWAYS AND CIRCUITRY TO EXTENT PRACTICAL.
10. DEMOLISH EXISTING CONNECTION TO BOILER PUMP BP-8. RETAIN AND REUSE RACEWAYS AND CIRCUITRY TO EXTENT PRACTICAL.

GRAPHIC SCALE

0 2' 4' 8' 12'

SCALE: 1/4"= 1'-0"

NO.	DATE	BY	DESCRIPTION

REVISIONS

THE Johnson + Mc Adams FIRM P.A.
ARCHITECTS/ENGINEERS • PLANNING • SURVEYING • MANAGEMENT
P.O. BOX 513, GREENWOOD, MISSISSIPPI – (662) 455-4443

REGISTERED PROFESSIONAL ENGINEER GREGORY A. CARRINGTON 20157 ELECTRICAL STATE OF CALIFORNIA 2/19/2026

A–E FIRM	USDA
PROJECT MANAGER	EPM
DTC	TG
DESIGNER	PPM
JCM, JGR	XXX
CHECKED BY	SAFETY & HEALTH
GAC	XXX
JOB #	REAL PROPERTY
1525	XXX

USDA Agricultural Research Service

USDA AGRICULTURAL RESEARCH SERVICE
BOILER UPGRADES DESIGN (CONTRACT 1)
WESTERN REGIONAL RESEARCH CENTER (WRRC)
ALBANY, CA

ENLARGED ELECTRICAL DEMOLITION PLANS

PROJECT NO. XXX	AGRICULTURAL RESEARCH SERVICE USDA/ARS, PA	SHEET ED401
DATE 2/19/2026	800 BUCHANNAN STREET ALBANY, CA	17 OF 22

C:\Users\TPS-8\AppData\Local\Temp\AcPublish_31936\ED401.dwg
Feb 19, 2026 - 4:17pm

ELECTRICAL LEGEND

GENERAL NOTES

1. ALL EQUIPMENT AND DEVICES ARE TO BE FLUSH MOUNTED UNLESS OTHERWISE NOTED.
2. DEVICES NOTED AS "GFI" SHALL BE GROUND FAULT CIRCUIT INTERRUPTING DEVICES.
3. DEVICES NOTED AS "WP" SHALL BE WEATHERPROOF WHILE-IN-USE.
4. DEVICES NOTED AS "DL" SHALL BE RATED FOR DAMP LOCATION.
5. DEVICES NOTED AS "NL" SHALL BE NIGHT LIGHTS. PROVIDE UNSWITCHED POWER TO FIXTURE.
6. DEVICES NOTED AS "WG" SHALL BE PROVIDED AND INSTALLED WITH A WIRE GUARD.
7. DEVICES NOTED AS "TR" SHALL BE TAMPER RESISTANT.
8. PROVIDE UNSWITCHED POWER TO EMERGENCY BATTERY PACKS.
9. "W/E" INDICATES DEVICE/DISCONNECT PROVIDED WITH THE EQUIPMENT BY OTHERS.

GEAR

- FUSED DISCONNECT SWITCH.
- NON-FUSED DISCONNECT SWITCH.
- MAGNETIC MOTOR STARTER.
- ENCLOSED CIRCUIT BREAKER.
- COMBINATION FUSED DISCONNECT AND MAGNETIC MOTOR STARTER.
- COMBINATION CIRCUIT BREAKER AND MAGNETIC MOTOR STARTER.
- ? PANELBOARD.

MISCELLANEOUS

- FLEXIBLE CONNECTION TO EQUIPMENT.

CONDUIT AND WIRING

CONDUCTORS IN CONDUIT CONCEALED WITHIN WALL OR CEILING. TIC MARKS INDICATE NUMBER OF CONDUCTORS. THE EQUIPMENT GROUNDING CONDUCTOR IS NOT SHOWN, BUT SHALL BE PROVIDED. SIZE THE EQUIPMENT GROUNDING CONDUCTOR AND THE CONDUIT PER THE NEC. THE ABSENCE OF TIC MARKS SIGNIFIES THAT TWO CONDUCTORS PLUS AN EQUIPMENT GROUNDING CONDUCTOR SHOULD BE PROVIDED. FOR EXAMPLE, THE MARKINGS TO THE LEFT SIGNIFY THAT THREE CONDUCTORS PLUS AN EQUIPMENT GROUNDING CONDUCTOR SHOULD BE PROVIDED.

10 THE TEXT INSIDE THE ARC INDICATES THE AWG SIZE OF THE CONDUCTORS THAT SHALL BE RUN IN THE CONDUIT. THE ABSENCE OF TEXT SIGNIFIES THAT THE CONDUCTORS SHOULD BE #12 AWG.

CONDUCTORS IN CONDUIT CONCEALED BELOW GRADE OR FLOOR. TIC MARKS INDICATE NUMBER OF CONDUCTORS. THE EQUIPMENT GROUNDING CONDUCTOR IS NOT SHOWN, BUT SHALL BE PROVIDED. SIZE THE EQUIPMENT GROUNDING CONDUCTOR AND THE CONDUIT PER THE NEC. THE ABSENCE OF TIC MARKS SIGNIFIES THAT TWO CONDUCTORS PLUS AN EQUIPMENT GROUNDING CONDUCTOR SHOULD BE PROVIDED. THE MARKINGS TO THE LEFT SIGNIFY THAT THREE CONDUCTORS PLUS AN EQUIPMENT GROUNDING CONDUCTOR SHOULD BE PROVIDED.

LA-1 HOMERUN TO PANELBOARD. ARC DENOTES CONCEALED CIRCUITRY. TEXT DENOTES PANELBOARD NAME WITH CIRCUIT NUMBER. DEVICES HAVING CIRCUIT NUMBERS LOCATED BESIDE THEM MAY NOT SHOW THE CIRCUIT NUMBERS AT THE HOMERUN ARROWS.

VOLTAGE DROP CHART FOR 20A, 1Ø CIRCUITS

Voltage	Circuit Length	Conductor Size (AWG)
120	< 50'	#12
120	> 50'	#10
120	> 90'	#8
120	> 140'	#6
277	< 130'	#12
277	> 130'	#10
277	> 200'	#8
277	> 330'	#6

VOLTAGE DROP CHART NOTES:
1) CIRCUIT SIZES INDICATED ON THE DRAWINGS ARE MINIMUM REQUIREMENTS. REFER TO THIS CHART FOR UPSIZING CONDUCTORS AS NEEDED.

2) DO NOT CONNECT CONDUCTORS LARGER THAN #10 DIRECTLY TO A RECEPTACLE OR A SWITCH. PROVIDE A JUNCTION BOX TO DOWNSIZE THE CONDUCTOR TO #12 AT THE DEVICE.

3) FOR CIRCUITS LONGER THAN THOSE LISTED ABOVE, CONSULT WITH THE ENGINEER FOR CONDUCTOR SIZES.

REGISTERED PROFESSIONAL ENGINEER
JOSEPH GREGORY CORRINGTON
E20157
ELECTRICAL
STATE OF CALIFORNIA
2/19/2026

THE Johnson + Mc Adams FIRM P.A.
ARCHITECTS/ENGINEERS • PLANNING • SURVEYING • MANAGEMENT
P.O. BOX 513, GREENWOOD, MISSISSIPPI • (662) 455-4943

NO.	DATE	BY	DESCRIPTION

REVISIONS

A-E FIRM	USDA
PROJECT MANAGER	DTC
EPM	TG
DESIGNER	JCM, JGR
PPM	XXX
CHECKED BY	GAC
SAFETY & HEALTH	XXX
JOB #	1525
REAL PROPERTY	XXX

USDA Agricultural Research Service

USDA AGRICULTURAL RESEARCH SERVICE
BOILER UPGRADES DESIGN (CONTRACT 1)
WESTERN REGIONAL RESEARCH CENTER (WRRC)
ALBANY, CA

ELECTRICAL LEGEND

PROJECT NO.	XXX	AGRICULTURAL RESEARCH SERVICE USDA/ARS, PA 800 BUCHANNAN STREET ALBANY, CA	SHEET E-000
DATE	2/19/2026		18 OF 22

Z:\100025_Projects\25157 - USDA WRRC Boiler Upgrades\drawings\Contract 1\E-000.dwg
Feb 19, 2026 - 4:17pm

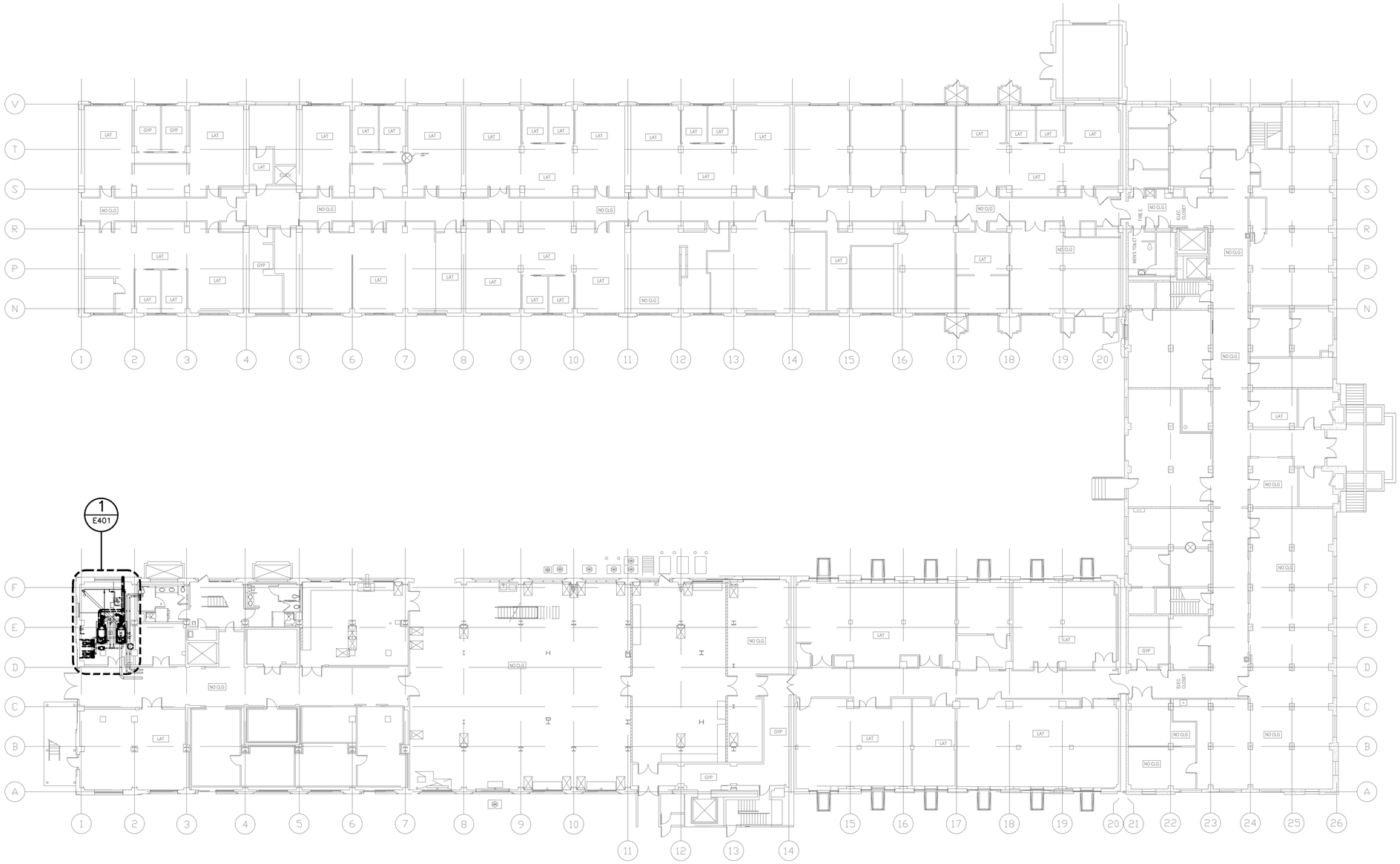

1 E-101 MAIN BUILDING BASEMENT OVERALL ELECTRICAL NEW WORK PLAN

SCALE: 1/16" = 1'-0"

GENERAL NOTES

1. THE NEW ELECTRICAL PLAN IS BASED ON THE BEST INFORMATION AVAILABLE AT THE TIME OF DESIGN. ALL EXISTING-TO-REMAIN PIECES OF EQUIPMENT ARE INTENDED TO BE FULLY FUNCTIONAL UPON COMPLETION OF CONSTRUCTION WORK.

GRAPHIC SCALE

0 8' 16' 32' 48'

SCALE: 1/16" = 1'-0"

NO.	DATE	BY	DESCRIPTION

REVISIONS

THE Johnson • McAdams FIRM P.A.
ARCHITECTS/ENGINEERS • PLANNING • SURVEYING • MANAGEMENT
P.O. BOX 513, GREENWOOD, MISSISSIPPI – (662) 455-4943

A–E FIRM	USDA
PROJECT MANAGER DTC	EPM TG
DESIGNER JCM, JGR	PPM XXX
CHECKED BY GAC	SAFETY & HEALTH XXX
JOB # 1525	REAL PROPERTY XXX

USDA Agricultural Research Service

USDA AGRICULTURAL RESEARCH SERVICE
BOILER UPGRADES DESIGN (CONTRACT 1)
WESTERN REGIONAL RESEARCH CENTER (WRRC)
ALBANY, CA

MAIN BUILDING BASEMENT OVERALL ELECTRICAL NEW WORK PLAN

PROJECT NO. XXX	AGRICULTURAL RESEARCH SERVICE USDA/ARS, PA	SHEET E-101
DATE 2/19/2026	800 BUCHANNAN STREET ALBANY, CA	19 OF 22

REGISTERED PROFESSIONAL ENGINEER
GREGORY A. CHRISTON
E20157
ELECTRICAL
STATE OF CALIFORNIA
2/19/2026

Z:\02025_Projects\25157 – USDA WRRC Boiler Upgrades\drawings\Contract 1\E101.dwg
Feb 19, 2026 – 4:17pm

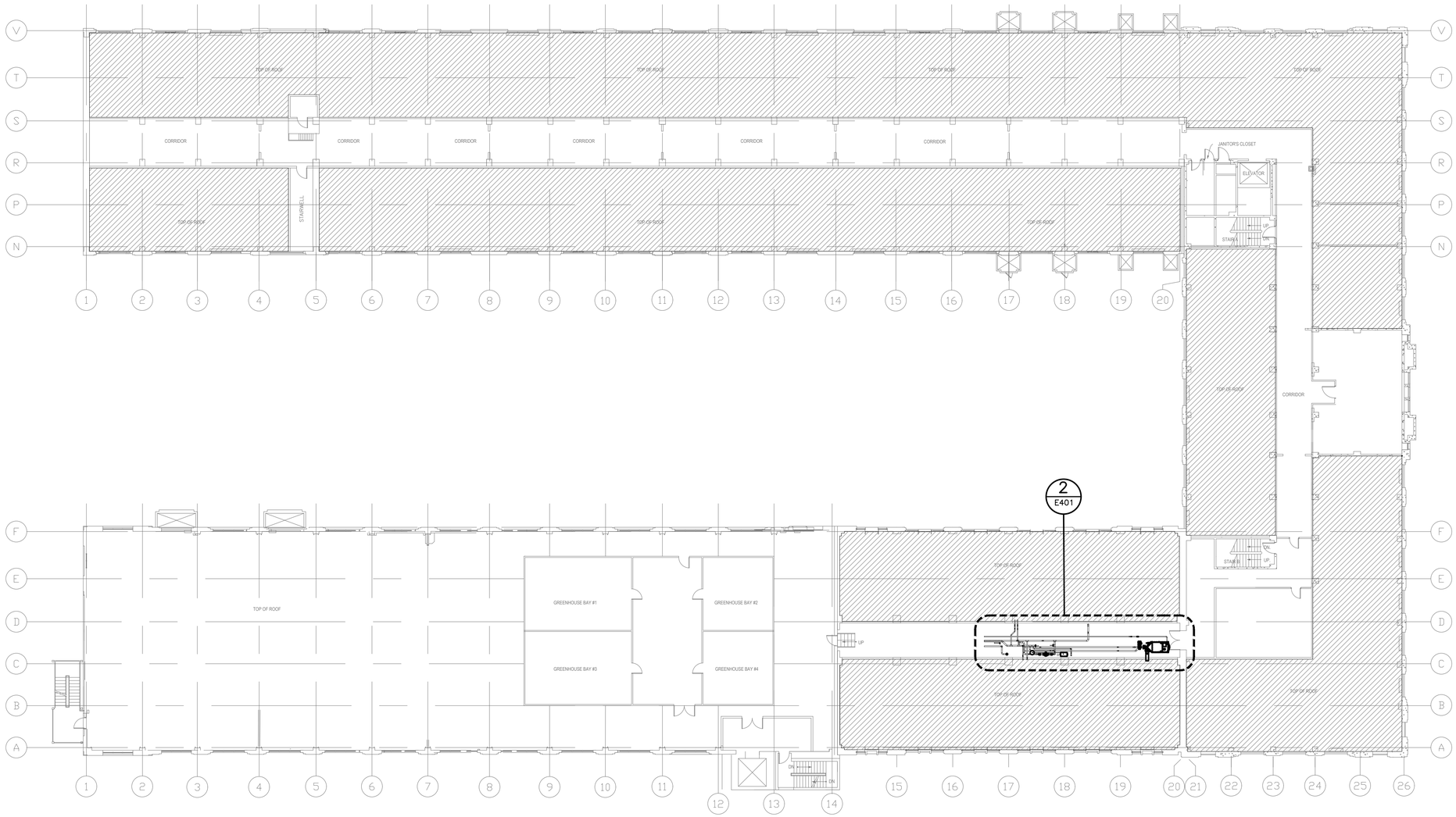

1 / E-102 MAIN BUILDING ATTIC OVERALL ELECTRICAL NEW WORK PLAN

SCALE: 1/16" = 1'-0"

GENERAL NOTES

1. THE NEW ELECTRICAL PLAN IS BASED ON THE BEST INFORMATION AVAILABLE AT THE TIME OF DESIGN. ALL EXISTING-TO-REMAIN PIECES OF EQUIPMENT ARE INTENDED TO BE FULLY FUNCTIONAL UPON COMPLETION OF CONSTRUCTION WORK.

GRAPHIC SCALE

0 8' 16' 32' 48'

SCALE: 1/16" = 1'-0"

THE Johnson + Mc Adams FIRM PA
ARCHITECTS/ENGINEERS + PLANNING + SURVEYING + MANAGEMENT
P.O. BOX 513, GREENWOOD, MISSISSIPPI - (662) 455-4943

NO.	DATE	BY	DESCRIPTION
			REVISIONS

A-E FIRM	USDA
PROJECT MANAGER	EPM
DTC	TG
DESIGNER	PPM
JCM, JGR	XXX
CHECKED BY	SAFETY & HEALTH
GAC	XXX
JOB #	REAL PROPERTY
1525	XXX

REGISTERED PROFESSIONAL ENGINEER GREGORY A. CONNELLY No. E20157 ELECTRICAL STATE OF CALIFORNIA 2/17/2026

USDA Agricultural Research Service

USDA AGRICULTURAL RESEARCH SERVICE
BOILER UPGRADES DESIGN (CONTRACT 1)
WESTERN REGIONAL RESEARCH CENTER (WRRC)
ALBANY, CA

MAIN BUILDING ATTIC OVERALL ELECTRICAL NEW WORK PLAN

PROJECT NO.	AGRICULTURAL RESEARCH SERVICE USDA/ARS, PA	SHEET
XXX	800 BUCHANNAN STREET ALBANY, CA	E-102
DATE 2/19/2026		20 OF 22

Z:\10025_Projects\25157 - USDA WRRC Boiler Upgrades\drawings\Contract 1\E102.dwg
Feb 19, 2026 - 4:17pm

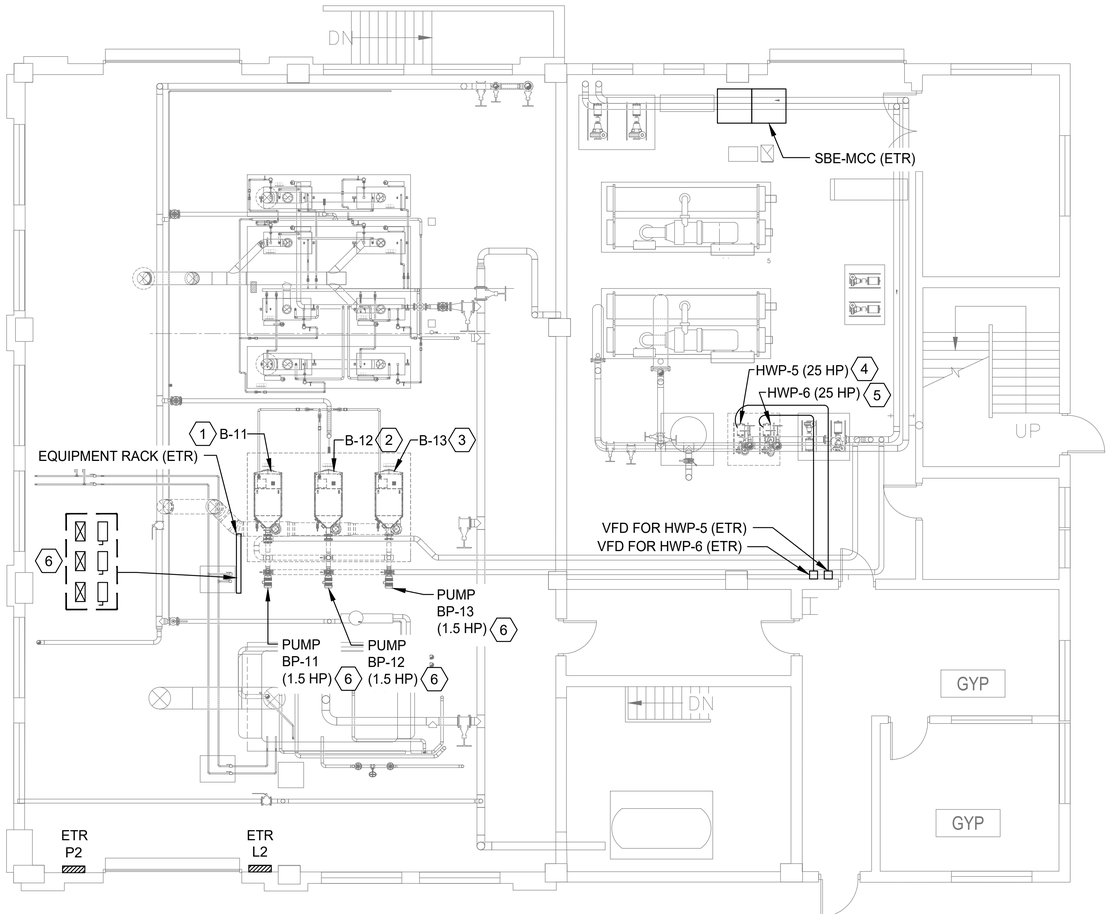

1 E-103 SERVICE BUILDING ELECTRICAL PLAN

SCALE: 3/16" = 1'-0"

GENERAL NOTES

1. THE NEW ELECTRICAL PLAN IS BASED ON THE BEST INFORMATION AVAILABLE AT THE TIME OF DESIGN. ALL EXISTING-TO-REMAIN PIECES OF EQUIPMENT ARE INTENDED TO BE FULLY FUNCTIONAL UPON COMPLETION OF CONSTRUCTION WORK.
2. USE LIQUID TIGHT FLEXIBLE METAL CONDUIT FOR FINAL CONNECTIONS TO EQUIPMENT. FLEXIBLE CONNECTIONS SHALL NOT EXCEED 3 FEET IN LENGTH.

(X) KEYED NOTES

1. PROVIDE NEW CONNECTION TO NEW BOILER B-11. NEW BOILER (B-11) SHALL BE FED FROM A 20/1 BREAKER IN PANEL L2 AT CIRCUIT #18. EXTEND CIRCUITRY AS REQUIRED USING 2#12, #12(G), 3/4" C. FINAL CONNECTION SHALL BE FLEXIBLE METALLIC CONDUIT.
2. PROVIDE NEW CONNECTION TO NEW BOILER (B-12). NEW BOILER (B-12) SHALL BE FED FROM A 20/1 BREAKER IN PANEL L2 AT CIRCUIT #24. EXTEND CIRCUITRY AS REQUIRED USING 2#12, #12(G), 3/4" C. FINAL CONNECTION SHALL BE FLEXIBLE METALLIC CONDUIT.
3. PROVIDE NEW CONNECTION TO NEW BOILER (B-13). NEW BOILER (B-13) SHALL BE FED FROM A 20/1 BREAKER IN PANEL L2 AT CIRCUIT #16. EXTEND CIRCUITRY AS REQUIRED USING 2#12, #12(G), 3/4" C. FINAL CONNECTION SHALL BE FLEXIBLE METALLIC CONDUIT.
4. PROVIDE A NEW FLEXIBLE CONNECTION FROM VFD TO PUMP (HWP-5) WITH 3#6, #10(G), 1"C. VFD IS FED FROM SBE-MCC-18.
5. PROVIDE A NEW FLEXIBLE CONNECTION FROM VFD TO PUMP (HWP-6) WITH 3#6, #10(G), 1"C. VFD IS FED FROM SBE-MCC-17.
6. PROVIDE ELECTRICAL CONNECTION FROM MOTOR STARTERS TO THE THREE PUMPS (PUMP BP-11, PUMP BP-12, AND PUMP BP-13). FINAL CONNECTION SHALL BE FLEXIBLE METALLIC CONDUIT. NOTE: PROVIDE NEW LABELS IN PANEL P2 FOR ALL THREE PUMPS WITH APPROPRIATE NAMES.

GRAPHIC SCALE

0 2' 4' 8' 16'

SCALE: 3/16"= 1'-0"

NO.	DATE	BY	DESCRIPTION

REVISIONS

THE Johnson • McAdams FIRM P.A.
ARCHITECTS/ENGINEERS • PLANNING • SURVEYING • MANAGEMENT
P.O. BOX 513, GREENWOOD, MISSISSIPPI – (662) 455-4943

A–E FIRM	USDA
PROJECT MANAGER DTC	EPM TG
DESIGNER JCM, JGR	PPM XXX
CHECKED BY GAC	SAFETY & HEALTH XXX
JOB # 1525	REAL PROPERTY XXX

REGISTERED PROFESSIONAL ENGINEER
GREGORY A. WASHINGTON
E20157
ELECTRICAL
STATE OF CALIFORNIA
2/19/2026

USDA Agricultural Research Service

USDA AGRICULTURAL RESEARCH SERVICE
BOILER UPGRADES DESIGN (CONTRACT 1)
WESTERN REGIONAL RESEARCH CENTER (WRRC)
ALBANY, CA

SERVICE BUILDING ELECTRICAL PLAN

PROJECT NO. XXX	AGRICULTURAL RESEARCH SERVICE USDA/ARS, PA	SHEET E-103
DATE 2/19/2026	800 BUCHANNAN STREET ALBANY, CA	21 OF 22

Z:\02025_Projects\25157 – USDA WRRC Boiler Upgrades\drawings\Contract 1\E103.dwg
Feb 19, 2026 – 4:17pm

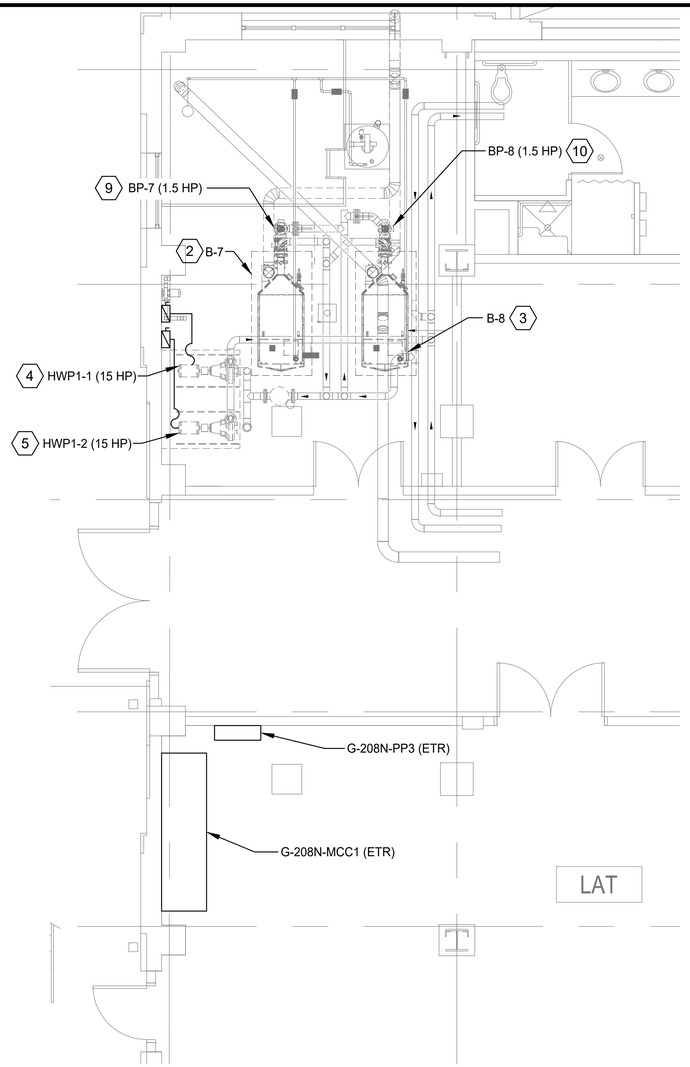

1 E-401 MAIN BUILDING BASEMENT ENLARGED ELECTRICAL PLAN

SCALE: 1/4" = 1'-0"

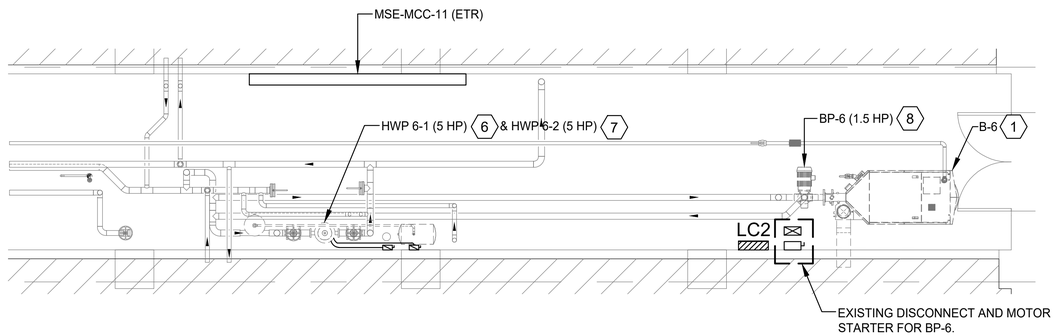

2 E-401 MAIN BUILDING ATTIC ENLARGED ELECTRICAL PLAN

SCALE: 1/4" = 1'-0"

GENERAL NOTES

1. THE NEW ELECTRICAL PLAN IS BASED ON THE BEST INFORMATION AVAILABLE AT THE TIME OF DESIGN. ALL EXISTING-TO-REMAIN PIECES OF EQUIPMENT ARE INTENDED TO BE FULLY FUNCTIONAL UPON COMPLETION OF CONSTRUCTION WORK.
2. USE LIQUID TIGHT FLEXIBLE METAL CONDUIT FOR FINAL CONNECTIONS TO EQUIPMENT. FLEXIBLE CONNECTIONS SHALL NOT EXCEED 3 FEET IN LENGTH.

(X) KEYED NOTES

1. PROVIDE NEW ELECTRICAL CONNECTION TO NEW BOILER B-6. B-6 SHALL BE FED FROM A 20/1 BREAKER IN LC2 AT CIRCUIT #27. EXTEND CIRCUITRY AS REQUIRED USING 2#12, #12(G), 3/4"C. FINAL CONNECTION SHALL BE FLEXIBLE METALLIC CONDUIT.
2. PROVIDE NEW ELECTRICAL CONNECTION TO NEW BOILER B-7. B-7 SHALL BE FED FROM A BREAKER IN G-208N-PP3 AT CIRCUIT #11. EXTEND CIRCUITRY AS REQUIRED USING 2#12, #12(G), 3/4"C. FINAL CONNECTION SHALL BE FLEXIBLE METALLIC CONDUIT.
3. PROVIDE NEW ELECTRICAL CONNECTION TO NEW BOILER B-8. B-8 SHALL BE FED FROM A BREAKER IN G-208N-PP3 AT CIRCUIT #9. EXTEND CIRCUITRY AS REQUIRED USING 2#12, #12(G), 3/4"C. FINAL CONNECTION SHALL BE FLEXIBLE METALLIC CONDUIT.
4. PROVIDE ELECTRICAL CONNECTION FROM DISCONNECT TO PUMP (HWP 1-1). HWP 1-1 SHALL BE FED FROM BUCKET 1C IN G-208N-MCC1. USE 3#4, #8(G), 1-1/4"C. FINAL CONNECTION SHALL BE FLEXIBLE METALLIC CONDUIT.
5. PROVIDE ELECTRICAL CONNECTION FROM DISCONNECT TO PUMP (HWP 1-2). HWP 1-2 SHALL BE FED FROM BUCKET 2B IN G-208N-MCC1. USE 3#4, #8(G), 1-1/4"C. FINAL CONNECTION SHALL BE FLEXIBLE METALLIC CONDUIT.
6. PROVIDE ELECTRICAL CONNECTION FROM DISCONNECT TO INLINE HEATING WATER PUMP #6-1. PUMP #6-1 SHALL BE FED FROM BUCKET 4B OF MSE-MCC-11. USE 3#10, #10(G), 3/4"C. FINAL CONNECTION SHALL BE FLEXIBLE METALLIC CONDUIT.
7. PROVIDE ELECTRICAL CONNECTION FROM DISCONNECT TO INLINE HEATING WATER PUMP #6-2. PUMP #6-2 SHALL BE FED FROM BUCKET 4C OF MSE-MCC-11. USE 3#10, #10(G), 3/4"C. FINAL CONNECTION SHALL BE FLEXIBLE METALLIC CONDUIT.
8. PROVIDE ELECTRICAL CONNECTION TO BP-6. BOILER PUMP BP-6 SHALL BE FED FROM A 30/3 BREAKER IN PANEL LC2 AT CIRCUIT #26,28,30. EXTEND CIRCUITRY AS REQUIRED USING 3#10, #10(G), 3/4"C. FINAL CONNECTION SHALL BE FLEXIBLE METALLIC CONDUIT.
9. PROVIDE ELECTRICAL CONNECTION TO BP-7. EXTEND CIRCUITRY AS REQUIRED USING 3#12, #12(G), 3/4"C. FINAL CONNECTION SHALL BE FLEXIBLE METALLIC CONDUIT.
10. PROVIDE ELECTRICAL CONNECTION TO BP-8. EXTEND CIRCUITRY AS REQUIRED USING 3#12, #12(G), 3/4"C. FINAL CONNECTION SHALL BE FLEXIBLE METALLIC CONDUIT.

GRAPHIC SCALE

0 2' 4' 8' 12'

SCALE: 1/4"= 1'-0"

NO.	DATE	BY	DESCRIPTION

REVISIONS

THE Johnson • Mc Adams FIRM P.A.
ARCHITECTS/ENGINEERS • PLANNING • SURVEYING • MANAGEMENT
P.O. BOX 513, GREENWOOD, MISSISSIPPI — (662) 455-4443

REGISTERED PROFESSIONAL ENGINEER GREGORY T. CARRINGTON 20157 ELECTRICAL STATE OF CALIFORNIA 2/19/2026

A-E FIRM	USDA
PROJECT MANAGER DTC	EPM TG
DESIGNER JCM, JGR	PPM XXX
CHECKED BY GAC	SAFETY & HEALTH XXX
JOB # 1525	REAL PROPERTY XXX

USDA Agricultural Research Service

USDA AGRICULTURAL RESEARCH SERVICE
BOILER UPGRADES DESIGN (CONTRACT 1)
WESTERN REGIONAL RESEARCH CENTER (WRRC)
ALBANY, CA

ENLARGED ELECTRICAL PLANS

PROJECT NO. XXX	AGRICULTURAL RESEARCH SERVICE USDA/ARS, PA	SHEET E-401
DATE 2/19/2026	800 BUCHANNAN STREET ALBANY, CA	22 OF 22

C:\Users\ YPS-8\AppData\Local\Temp\AcPublish_31536\E401.dwg
Feb 19, 2026 - 4:17pm