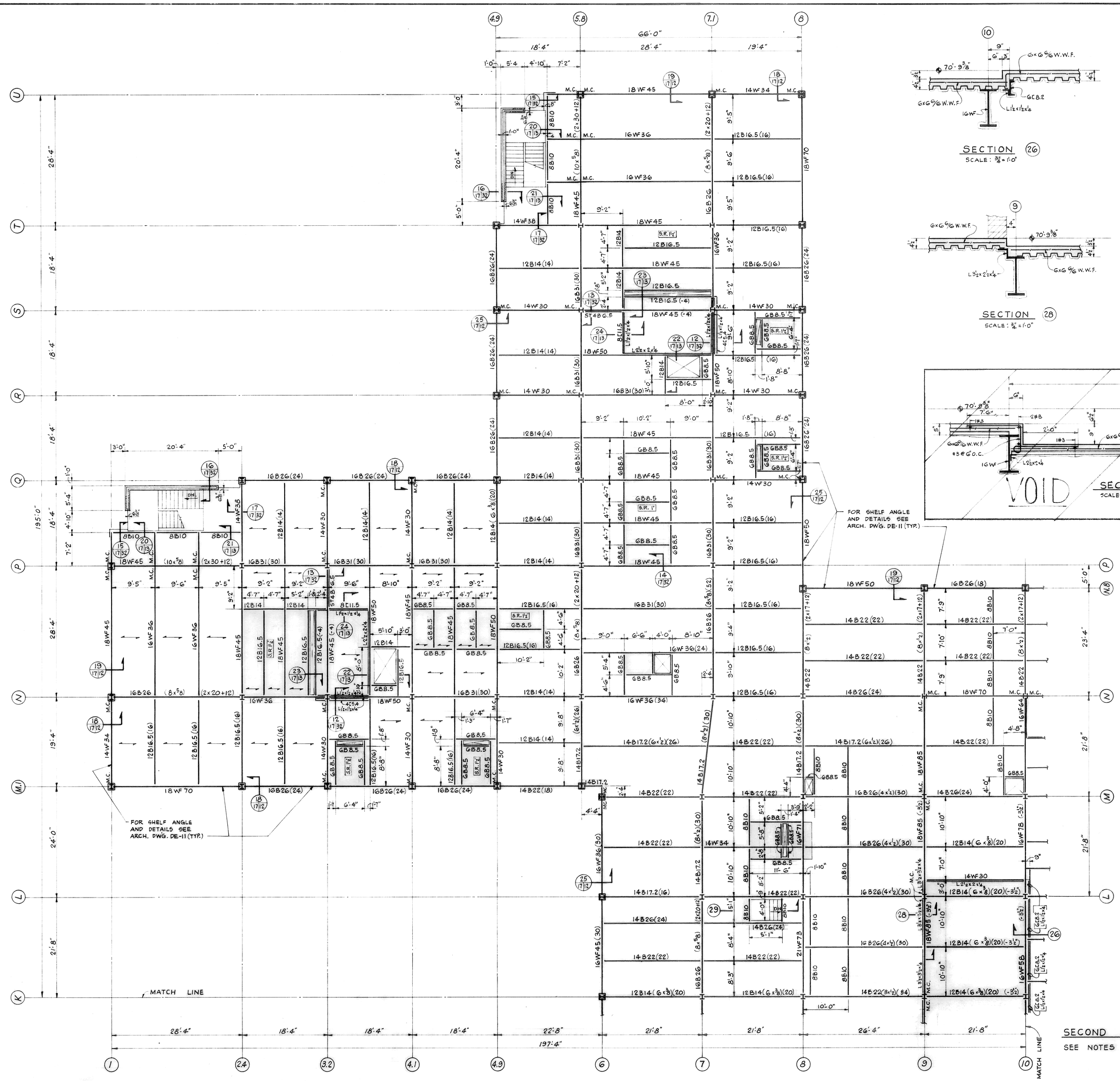

SECOND FLOOR FRAMING PLAN "B"

SCALE: 1/8" = 1'-0"

ELEV. TOP OF STEEL 70'-4 3/8" (UNLESS NOTED ON PLAN)

SECTION (26)
SCALE: 3/4" = 1'-0"

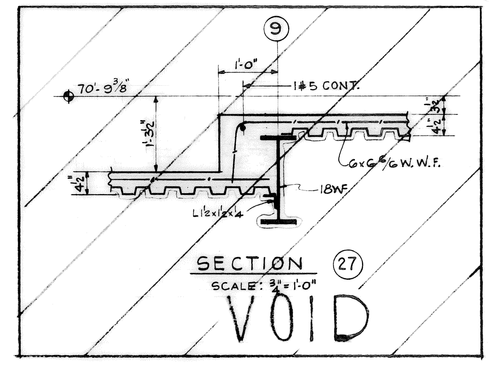

SECTION (27)
SCALE: 3/4" = 1'-0"

SECTION (28)
SCALE: 3/4" = 1'-0"

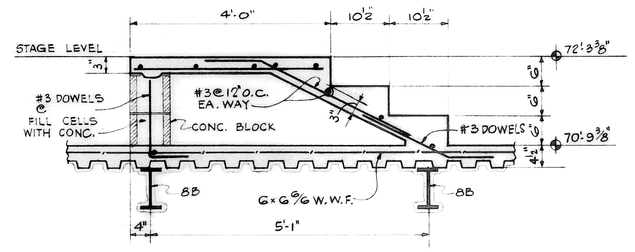

SECTION (29)

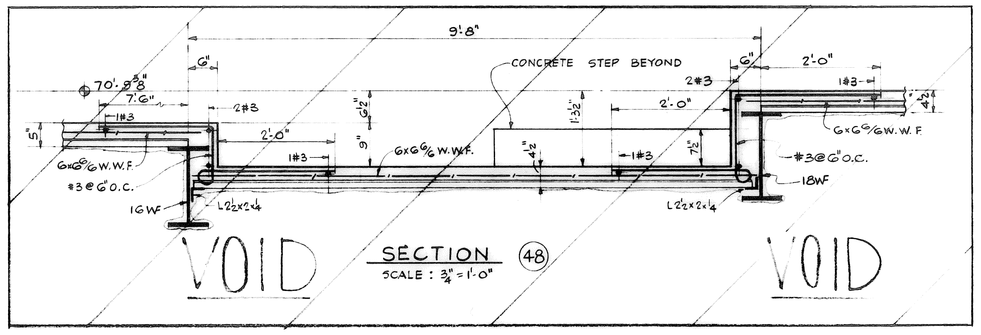

SECTION (48)
SCALE: 3/4" = 1'-0"

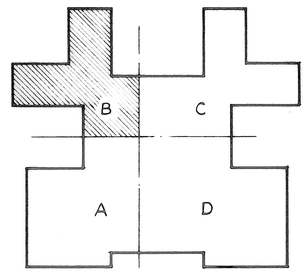

KEY PLAN

SECOND FLOOR NOTES:

SEE NOTES ON DWG 1-518

3-0-1-2269

H. JOSEPH DIAZ CERTIFICATE No. 8898 STATE OF FLORIDA REGISTERED ENGINEER

FRANK S. VALENTI CERTIFICATE No. 2532 STATE OF FLORIDA REGISTERED ARCHITECT

2ND. FLOOR FRAMING PLAN "B"
BUILDING Nº 1
720 BED
M. S. & N. HOSPITAL
VETERANS ADMINISTRATION
TAMPA, FLORIDA

Drawn A.G. | Proj. Mgr F.S.V.
Checked L.C. | Date AUG.15.68

REVISIONS: AS BUILT 7-20-72

ELIOT C. FLETCHER AIA
FRANK S. VALENTI AIA
ARCHITECTS TAMPA
SCHMIDT, GARDEN & ERIKSON
ASSOCIATE ARCHITECTS • ENGINEERS CHICAGO
H. JOSEPH DIAZ & ASSOCS.
SAM CARASTRO & ASSOCS.
ENGINEERS TAMPA

DRAWING NUMBER 1-S17
Sheet 19 of 49
Proj. No. 09-5239

ONE EIGHTH INCH EQUALS ONE FOOT
0 2 4 6 8 10 12 14 16 18 20 22 24 26 28 30 32 34 36 38

RETURN TRACINGS TO PLAN LIBRARY

FILE FOLDER NO. 2A