COLUMN SCHEDULE BUILDING Nº 1

Level	Elevation	Height
PENTHOUSE ROOF FIN. FL. EL. 170.78'		
ELEV. MACH. FLOOR FIN. FL. EL. 158.36'	12'-5"	
ROOF FIN. FL. EL. 146.78'	11'-7"	
7TH. FLOOR FIN. FL. EL. 134.11'	12'-8"	
6TH. FLOOR FIN. FL. EL. 121.45'	12'-8"	
5TH. FLOOR FIN. FL. EL. 108.78'	12'-8"	
4TH. FLOOR FIN. FL. EL. 96.11'	12'-8"	
3RD. FLOOR FIN. FL. EL. 83.45'	12'-8"	
2ND. FLOOR FIN. FL. EL. 70.78'	12'-8"	
1ST. FLOOR FIN. FL. EL. 57.0'	13'-9⅜"	
GROUND FLOOR FIN. FL. EL. 43.22'	13'-9⅜"	
PIPE BASEMENT TOP OF MAT EL. 34.22'	9'-0"	
BASE PLATE		
BASE ℄ BOTT. ELEV.		34.47'

Mark	Column	Pipe Basement	Ground Floor	First Floor	Second Floor	Base Plate
N.8	9	3"	10WF49	178.7 K		12"×30"×1⅛"
N.8	10		10WF49	168.0 K		12"×30"×1⅛"
N.8	11		10WF45	215.0 K		12"×30"×1⅛"
N.8	12		10WF45	227.4 K		12"×30"×1⅛"
N.8	13		10WF45	244.6 K		12"×30"×1⅛"
N.8	14		10WF49	262.8 K		12"×30"×1⅛"
P	1		10WF49	181.0 K		19"×21"×1⅛"
P	2.4		10WF66	234.0 K		19"×21"×1⅛"
P	3.2		10WF100	23.0 W.L. 172.0 K		19"×21"×1⅛"
P	4.1		10WF100	23.0 W.L. 172.0 K		19"×21"×1⅛"
P	4.9		10WF49	171.8 K		19"×21"×1⅛"
P	5.8		10WF60	219.0 K		19"×21"×1⅛"
P	7.1		10WF60	219.0 K		19"×21"×1⅛"
P	14.9		10WF66	363.0 K		19"×21"×1⅛"
P	16.2		10WF66	363.0 K		19"×21"×1⅛"
P	17.1		10WF49	234.0 K		19"×21"×1⅛"
P	17.9		10WF100	23.0 W.L. 172.0 K		19"×21"×1⅛"
P	18.8		10WF100	23.0 W.L. 172.0 K		19"×21"×1⅛"
P	19.6		10WF66	234.0 K		19"×21"×1⅛"
P	21		10WF49	187.0 K		19"×21"×1⅛"
Q	2.4		10WF39	91.0 K		16"×19"×⅞"
Q	3.2		10WF89	23.0 W.L. 112.0 K		19"×21"×1⅛"
Q	4.1		10WF89	23.0 W.L. 112.0 K		19"×21"×1⅛"
Q	4.9		10WF49	138.2 K		19"×21"×1⅛"
Q	5.8		10WF49	171.8 K		19"×21"×1⅛"
Q	7.1		10WF100	23.0 W.L. 172.0 K		19"×21"×1⅛"
Q	8		10WF89	23.0 W.L. 172.0 K		19"×21"×1⅛"
Q	14		10WF89	23.0 W.L. 135.1 K		19"×21"×1⅛"
Q	14.9		10WF100	23.0 W.L. 138.2 K		19"×21"×1⅛"
Q	16.2		10WF100	19.4 W.L. 315.6 K		19"×21"×1⅛"
Q	17.1		10WF60	315.6 K		19"×21"×1⅛"
Q	17.9		10WF49	138.2 K		19"×21"×1⅛"
Q	18.8		10WF89	23.0 W.L. 112.0 K		19"×21"×1⅛"
Q	19.6		10WF89	23.0 W.L. 112.0 K		19"×21"×1⅛"
R	4.9		10WF39	91.0 K		16"×19"×⅞"
R	5.8		10WF89	23.0 W.L. 112.0 K		19"×21"×1⅛"
R	7.1		10WF100	23.0 W.L. 172.0 K		19"×21"×1⅛"
R	8		10WF89	23.0 W.L. 112.0 K		19"×21"×1⅛"
R	14		10WF89	19.4 W.L. 112.0 K		19"×21"×1⅛"
R	14.9		10WF100	19.4 W.L. 315.6 K		19"×21"×1⅛"
R	16.2		10WF100	19.4 W.L. 315.6 K		19"×21"×1⅛"
R	17.1		10WF89	19.4 W.L. 112.0 K		19"×21"×1⅛"
S	4.9		10WF89	23.0 W.L. 112.0 K		19"×21"×1⅛"
S	5.8		10WF100	23.0 W.L. 172.0 K		19"×21"×1⅛"
S	7.1		10WF100	23.0 W.L. 172.0 K		19"×21"×1⅛"
S	8		10WF89	23.0 W.L. 112.0 K		19"×21"×1⅛"
S	14		10WF89	19.4 W.L. 112.0 K		19"×21"×1⅛"
S	14.9		10WF100	19.4 W.L. 236.4 K		19"×21"×1⅛"
S	16.2		10WF100	19.4 W.L. 236.4 K		19"×21"×1⅛"
S	17.1		10WF89	19.4 W.L. 112.0 K		19"×21"×1⅛"
T	4.9		10WF39	91.0 K		16"×19"×⅞"
T	5.8		10WF66	234.0 K		19"×21"×1⅛"
T	7.1		10WF60	219.0 K		19"×21"×1⅛"
T	8		10WF49	126.0 K		19"×21"×1⅛"
T	14		10WF49	126.0 K		19"×21"×1⅛"
T	14.9		10WF60	219.0 K		19"×21"×1⅛"
T	16.2		10WF66	234.0 K		19"×21"×1⅛"
T	17.1		10WF39	91.0 K		16"×19"×⅞"

BASE ℄ BOTTOM ELEV. 34.47'

COLUMN SCHEDULE BUILDING Nº 1

Mark	Column	Ground Floor	First Floor	Second Floor	Base Plate
U	5.8	10WF49	187.0 K		19"×21"×1⅛"
U	7.1	10WF100	23.0 W.L. 182.0 K		19"×21"×1⅛"
U	8	10WF89	23.0 W.L. 110.0 K		19"×21"×1⅛"
U	14	10WF89	23.0 W.L. 110.0 K		19"×21"×1⅛"
U	14.9	10WF100	23.0 W.L. 182.0 K		19"×21"×1⅛"
U	16.2	10WF49	187.0 K		19"×21"×1⅛"

BASE ℄ BOTT. ELEV. 34.47'

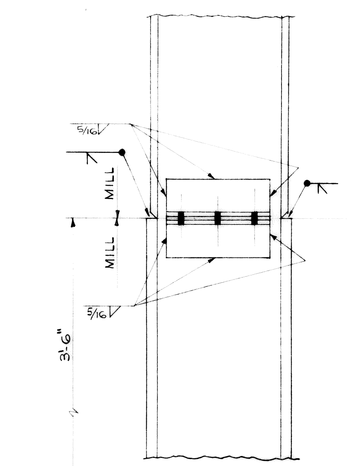

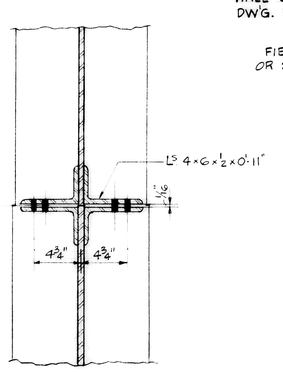

SECTION 1
SCALE: 1½"=1'-0"

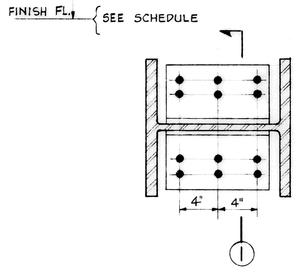

DETAIL OF SPLICE FOR COLUMNS OF SAME NOMINAL DEPTH
SCALE: 1½"=1'-0"

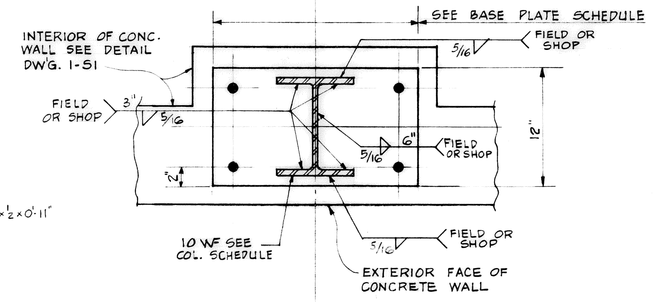

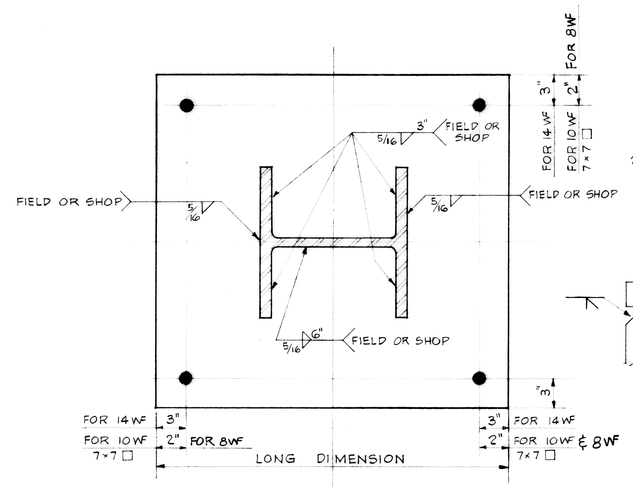

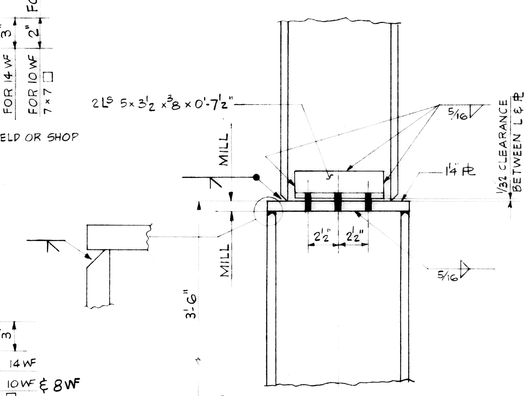

DETAIL OF SPLICE FOR COLUMNS WITH DIFFERENT NOMINAL DEPTHS
SCALE: 1½"=1'-0"

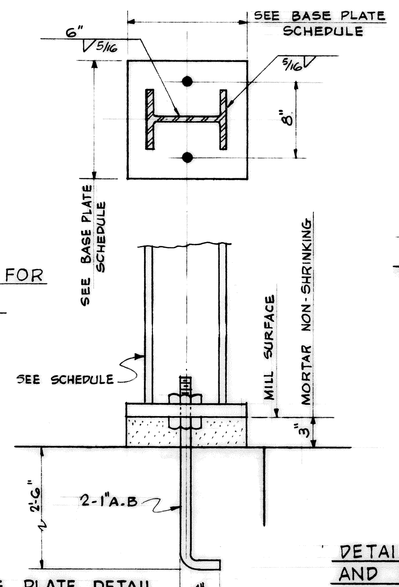

COLUMN BASE PLATE DETAIL FOR COL'S. H-2; H-20; A-14; A-20
SCALE 1½"=1'-0"

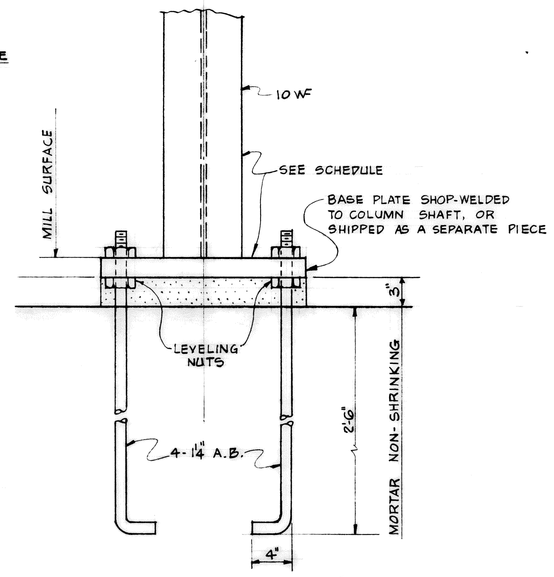

DETAIL OF COL. BASE PLATE 12"×21"; 12"×25" AND 12"×30", FOR PERIPHERAL COLUMNS
SCALE: 1½"=1'-0"

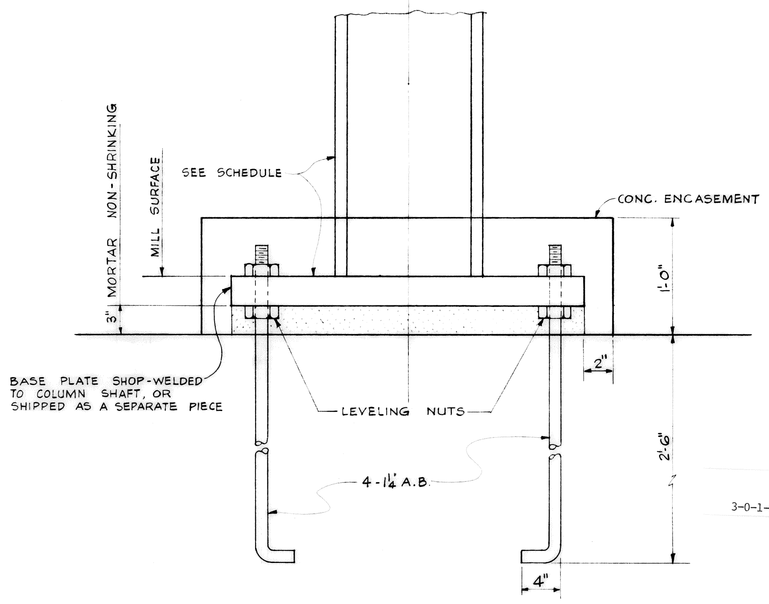

COLUMN BASE PLATE DETAIL
SCALE: 1½"=1'-0"

3-0-1-2259

H. JOSEPH DIAZ CERTIFICATE No. 8898 STATE OF FLORIDA REGISTERED ENGINEER

FRANK S. VALENTI CERTIFICATE No. 2532 STATE OF FLORIDA REGISTERED ARCHITECT

COLUMN SCHEDULE
BUILDING Nº 1

36

720 BED
M. S. & N. HOSPITAL
VETERANS ADMINISTRATION
TAMPA, FLORIDA

Drawn A.G. Proj. Mgr. F.S.V.
Checked L.C. Date AUG. 15, 68

REVISIONS
1 AS BUILT 7-20-72

ELIOT C. FLETCHER AIA
FRANK S. VALENTI AIA
ARCHITECTS TAMPA
SCHMIDT, GARDEN & ERIKSON
ASSOCIATE ARCHITECTS + ENGINEERS CHICAGO
H. JOSEPH DIAZ & ASSOCS.
SAM CARASTRO & ASSOCS.
ENGINEERS TAMPA

DRAWING NUMBER
1-S7
Sheet 9 of 49
Proj. No. 09-5239

RETURN TRACINGS TO PLAN LIBRARY
FILE FOLDER NO. 2A