STATEMENT OF WORK (SOW)
FOR
Security Equipment Installation for Modular SCIF at CG Sector San Diego

1.0 GENERAL

1.1 BACKGROUND

The United States Coast Guard (USCG) is initiating a project to establish fully outfitted Sensitive Compartmented Information Facilities (SCIFs) at USCG Sector in San Diego, California. These SCIFs will be constructed within modified freight shipping containers, ensuring full compliance and certification according to Intelligence Community Directive (ICD) 705 standards. These facilities will support secure processing and storage of classified information, including but not limited to Non-classified Internet Protocol Router Network (NIPR), Secret Internet Protocol Router Network (SIPR), Joint Worldwide Intelligence Communications System (JWICS), Secure Video Teleconferencing (SVTC) capabilities, and data up to the Top Secret/Sensitive Compartmented Information (TS/SCI) level. To facilitate operational readiness, the SCIFs will require appropriate security equipment that includes an Intrusion Detection System (IDS), an Access Control System (ACS), and a twenty-four-hour Closed-Circuit Television (CCTV) installed within the SCIF.

1.2 SCOPE

Security System Installation

This section outlines the requirements for the installation of Intrusion Detection Systems (IDS), Access Control Systems (ACS), and Closed-Circuit Television (CCTV) equipment at the designated facility. All installations must be performed in accordance with Intelligence Community Directive (ICD) 705 standards and applicable federal regulations.

Equipment Installation and Configuration

The Contractor shall provide all labor, tools, and expertise necessary to install and configure the IDS, ACS, and CCTV equipment as specified in this SOW. The Contractor's personnel must possess documented expertise in the installation and configuration of Bosch, AXIS, and Telguard security equipment, encompassing both hardware and software aspects.

Government-Furnished Equipment (GFE)

Certain equipment will be provided to the Contractor by the Government, as detailed in Tables 1, 2, and 3 of this document. The Contractor is responsible for the proper handling, storage, and installation of all GFE.

Contractor-Furnished Equipment (CFE)

The Contractor must furnish all peripheral and auxiliary equipment required for the successful operation of the security systems. This includes, but is not limited to, cabling, connectors, zip ties, rack-mounting hardware, and any specialized tools necessary for installation and

configuration. The Contractor is responsible for procuring and providing all required CFE in a timely manner.

Hardware Compliance and Approval

All hardware integrated with the IDS, ACS, and CCTV systems must be of a brand approved for federal government use (e.g., Bosch, AXIS) and compliant with Federal Information Processing Standards (FIPS). Any proposed hardware not included on the pre-approved list must be submitted to the PAC AREA Special Security Officer (SSO) or local Coast Guard Information System Security Officer (ISSO) for review and approval prior to procurement and installation. The Contractor shall provide detailed specifications and compliance documentation for any proposed alternative hardware.

1.3 OBJECTIVE

Install IDS, ACS, and CCTV at the Coast Guard Sector San Diego SCIF. Installation needs are driven by the following architectural drawings:

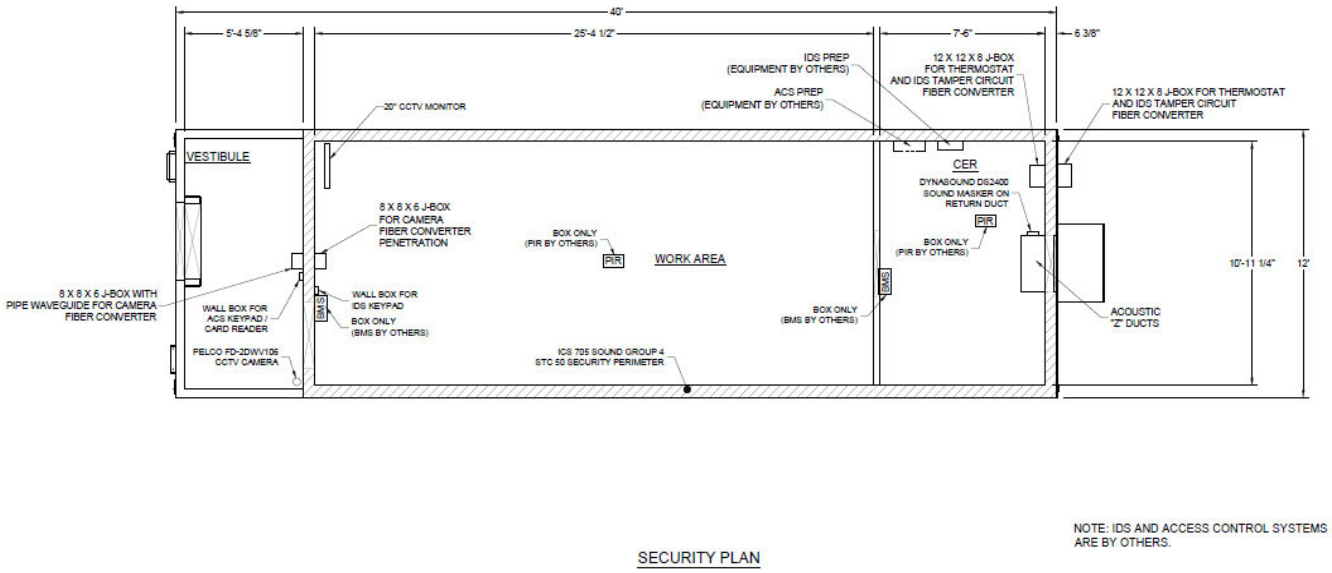

NOTE: IDS AND ACCESS CONTROL SYSTEMS
ARE BY OTHERS.

SECURITY PLAN

Figure - 1

1.4 APPLICABLE DOCUMENTS

1.4.1 Compliance Documents

The following documents provide specifications, standards, or guidelines that must be complied with in order to meet the requirements of this contract:

- *ICD 705 v1.5.1_Tech Specs for Construction and Management of SCIFs, July 26, 2021*
- *U.S. Coast Guard TEMPEST Program (series)*
- *USCG Cyber Security Manual (series)*
- *Federal Information Processing Standards 140-3, September 22, 2019*
- *DHS Denver Mega Center Request Form*

1.4.2 Reference Documents

The following documents may be helpful to the Contractor in performing the work described in this document:

Bosch Manuals
- B9512G Installation Manual
- ISC-BPR2-WP12 Manual
- B465 Installation Manual
- Access Management System V4.0.1 Configuration and Operation Software Manual
- LECTUS Secure Readers Installation Manuals
- ADS-AMC2-4WCF Access Modular Controller 2 Installation Manual

AXIS Manuals
- AXIS Camera Station MK II Appliance – User Manual
- AXIS P3265-V Dome Camera User Manual

Miscellaneous Manuals
- HDS 5000 | 5300 Series Installation Instructions
- Telguard TG-7 Installation and Operating Guide
- ARMAG Modular SCIF Elevation Diagrams S4406 and S4407

2.0 SPECIFIC REQUIREMENTS/TASKS

2.0.1 Contractor Prerequisites and Certifications:

UL 2050 Certification and Compliance, Extent 3

a. Contractor Certification: The Contractor shall possess and maintain an active Underwriters Laboratories (UL) 2050 certification (CRZH or CRZM designation) for National Industrial Security Systems prior to contract award and throughout the duration of the contract lifecycle.

b. Regulatory Compliance: All Intrusion Detection Systems (IDS), Access Control Systems (ACS), and Closed-Circuit Television (CCTV) equipment, installation methods, and monitoring protocols shall strictly adhere to the requirements set forth in the current versions of UL 2050, Intelligence Community Directive (ICD) 705.

c. Equipment and Encryption Standards: The Contractor shall ensure that all installed IDS components are UL-listed for high security.

d. Response Times and Maintenance: The contractor will not require surveillance services as it will be tasked by the DHS Dever Mega Center. See section 2.1.2 - Configure Telguard TG-7 to Connect to Mega Center.

e. Personnel: All Contractor personnel involved in the design, installation, maintenance, and monitoring of the SCIF security systems must be a united states citizen.

One week prior to the commencement of the work on Coast Guard Sector San Diego, the contractor shall contact [redacted] to provide the name of the technicians to ensure base access. While on Sector San Diego, personnel and bags are subject to search and possible seizure of contraband. The contractor is responsible for the actions of the technicians while on Coast Guard Sector San Diego.

2.1 TASK ONE. *IDS Installation*

An intrusion detection system (IDS) must be implemented at the primary access point of the Modular SCIF. Upon breach of the entrance while the system is armed, an alarm notification will be transmitted to the DHS Mega Center, triggering a pre-defined response protocol involving local security personnel and designated points of contact. The system must incorporate motion detectors strategically positioned in the vicinity of the SCIF door, including both near-surface and overhead placements, as well as within the interior office space, utilizing ceiling-mounted sensors.

2.1.1 Install Controller and Equipment

The Intrusion Detection System (IDS) controller must be configured with a 60-second arming delay to allow authorized personnel adequate time to exit the SCIF after initiating the arming sequence. This arming delay must commence upon activation of the system. Following the expiration of the 60-second delay, the IDS must enter its fully armed state. At this point, any subsequent unauthorized access attempt, specifically defined as the opening of the SCIF door or the detection of motion by any of the installed motion sensors, must immediately trigger an alarm state. This alarm state must initiate the pre-defined response protocol, including notification of the DHS Mega Center and relevant security personnel.

IDS connection to the antenna must not be inside the SCIF and must be on the roof of the facility with a tamper guard. When the container housing the Telgauard antenna and module is accessed, an alarm must sound on within the IDS notifying that the tamper guard has been triggered. Connections to and from the module and antenna must be sealed and secured to the TEMPEST standards. Sound or air must not enter the penetrations going into the SCIF and must be sealed with metal enclosures.

2.1.2 Configure Telguard TG-7 to Connect to Mega Center

a. The IDS must communicate with the Denver MegaCenter. The MegaCenter must be able to always determine that state of the IDS. The Denver Mega Center Request Form (enclosure 1) must be filled out by the contracting employee. Essential Coast Guard information may be requested.

b. The IDS will be administered from within the Modular SCIF from a maintenance laptop. This laptop must connect to the IDS to perform administration of the system but will otherwise not be connected to LAN or WAN systems.

c. The IDS must integrate with the battery back-up power source.

d. All portions of the installation design plans, not otherwise addressed, shall be installed to perform in the manner for which it was intended.

2.1.3 Train Members

Essential members must become educated on how to operate the IDS system and perform the following:

- Assigning call center (Denver MegaCenter)
- Arming/Disarming IDS
- Navigating Telguard website
- Reassigning IDS PIN
- Basic Troubleshooting

2.2 TASK TWO. ACS Installation

2.2.1 Install ACS Equipment

If connecting ACS cables with ethernet cables, shielded twisted pair CAT5 or CAT6 must be used.

Any penetration to the facility wall must be sound-proofed and comply with the Coast Guard TEMPEST standards.

Badging equipment must comply with the following:

a. Outside SCIF door – A badge scanner with PIN entry must be installed outside of the SCIF near the door. To access the SCIF door, a token with a user assigned PIN must be authenticated on the badge scanner before allowing entry. The ability to apply anti-passback must be available to users.

b. Inside SCIF door – A badge scanner without PIN entry must be installed inside of the SCIF near the door to complete anti-pass back configuration.

2.2.2 Configure Workstation and software

Contracted employees must configure ACS workstation to where the Operating System is functional with a login and password assigned by the local members. Additionally, the RFID tokens must be registered for the applicable members.

2.2.3 Train Members

Contractors must train appointed members on how to operate the user interfaces to perform the following:

- User creation
- User deletion
- RFID/Badge registration
- Toggle anti-pass back
- Space access
- Historical Tracking/Monitoring
- Change Admin Password
- Delete Users
- Archive Users
- Blocking access
- Changing PIN codes
- Adding Locations
- Adding Zones
- General Troubleshooting
- Site Navigation
- Alert Configuration
- Setting Expiration Dates

Members must be comfortable configuring settings independently without the need of support from contractor.

2.3 TASK THREE. CCTV Installation

2.3.1 Install cameras

Four cameras must be installed around the perimeter of the Modular SCIF. Where monitoring equipment can be viewed from inside of the SCIF beyond the secured door. Cabling must be within the TEMPEST standards and shall not be connected to any Coast Guard network physically or logically. A 360-degree view is required to be monitored around the facility.

The brand of equipment shall be Bosch and/or AXIS, otherwise the equipment must be approved by the Coast Guard. The equipment must be capable withstanding 24/7 marine environment conditions with sea-salt air and harsh weather in accordance to CG technical requirements (see section 2.3.4).

All VSS Components must be in compliance with H.R. 5515: John S. McCain National Defense Authorization Act for Fiscal Year 2019- absolutely no equipment produced by manufacturers Hikvision and Dahua may be installed on any part of this system.

2.3.2 Configure Server/Switch and Software

Cameras shall be connected to a standalone, Windows 11 server that is provided by the Coast Guard. A switch will be connected to the workstation. Workstation shall not be connected to any Coast Guard network or network in general including remote access capabilities. A minimum of one month (or 30 days) of 24/7 footage must be stored for all cameras. Contracted employees must ensure that all cameras establish a successful connection to the workstation/switch to each camera. The monitor view shall display all cameras in real time in one window and record 24/7.

A minimum of one year warranty must be included for all VSS hardware and electronic systems. This shall include onsite troubleshooting assistance should any part of the system not operate in accordance to the original system specifications. Additionally, the initial contract should include provisions for 3 additional years of system lifecycle maintenance (i.e. yearly on-site maintenance groom visit).

2.3.3 Train Members on Interface

Members must be trained to perform the following:

- User creation
- User configuration
- Camera control
- Storage configuration
- Recording navigation
- Recording Archiving
- Basic Troubleshooting

2.3.4 Additional Equipment Details and Specifications

Video Surveillance System (VSS).

1. All USCG facilities shall use Bosch VSS equipment, or approved equivalent, for recording and control of VSS cameras. The recording and control equipment shall be compatible with all other ESS equipment installed at these facilities. The equipment shall meet all requirements of the Unified Facilities Guide Specification Section (UFGS) 16751A and shall be approved by the CSO and Facilities Engineering Officer prior to installation.

2. Cameras covering perimeter entry/exit points are to be positioned so that the field of view provides positive identification of individuals and vehicles both entering and exiting controlled areas. All camera positions will be verified and approved by the local physical security specialist responsible for the site. Screen captured still photographs of images indicating final camera positioning shall be provided by the installation contractor to the CSO prior to product acceptance.

B. Video Monitors.

1. There will be several different configurations of monitors used in the ESS installation depending on the video control equipment used. All configurations will use a minimum of two video monitors.

2. Cameras will be connected to appropriately sized Network Video Recorders: A flat screen, HDMI capable monitor with a viewing area of 20 inches or more shall be used for multi-screen viewing, recorded video viewing, and programming of the VSS system. A second monitor shall be standard color video monitor with a viewing area of 20 inches or more to view the output from the NVRs and view the pan-tilt zoom (PTZ) cameras during viewing and control.

C. Cameras.

1. Interior/Exterior Fixed Cameras. Interior fixed cameras shall be Bosch LTC0485 series camera or approved equivalent. Exterior fixed cameras shall be Bosch LTC0495 series camera or approved equivalent.

2. Interior/Exterior Fixed Camera Enclosures. Interior or exterior fixed cameras requiring protection from the surrounding environment shall use Bosch housings or approved equivalent. Exterior fixed cameras requiring protection from the surrounding environment shall use Bosch UHO-HBPS-10 housings or approved equivalent.

3. Fixed Camera Lenses. Bosch LTC0485, or approved equivalent, interior cameras shall use Bosch auto-iris, or approved equivalent, variable focal length lenses. The lens shall have a focal length sized to observe the desired coverage area. Bosch LTC 0630, or approved equivalent, shall be used for exterior applications and shall use Bosch auto-iris, IR-corrective, variable focal length lenses, or approved equivalent. The lens shall have a focal length sized to observe the desired coverage area. All exterior cameras shall be installed in the appropriate UHO housing configuration specified above.

4. Pan, Tilt, and Zoom Cameras.

PTZ cameras shall be Bosch Modular Autodomes, or approved equivalent.

The camera shall have:

¼" CCD imager.

Fully interchangeable CPU's, cameras, housings, communications & mounts.

Horizontal resolution of 540TV lines.

Lens F1.6 to F4.5 (3.4 ~ 122mm optical).

Zoom 36X optical, 12X electronic.

Video signal to noise >50 db.

Maximum sensitivity 0.083 lux, color and 0.016 lux, black and white.

Clear lower dome.

D. VSS Lighting Requirements. The lighting configuration for VSS cameras shall be LED (Light Emitting Diode) and be a minimum of 4000k (Kelvin) for optimum VSS assessment of each zone. This includes, but is not limited to, coordinating the lighting fixtures with the spectral sensitivity of the camera, adding infrared illumination, and providing sufficient lighting to meet the minimum faceplate illumination requirements of the camera. Approved IR illuminators will be controlled by their respective cameras and activated only when those cameras require IR illumination. Refer to UFGS 16528A for additional design requirements for VSS assessment lighting.

E. Audio Monitoring.

1. Where one-way listen or two-way listen/talkback capabilities are desired at USCG Arms Rooms or CWSs, Louroe Electronics model AP-12TB or AP-16TB audio monitoring base station and applicable components, or approved equivalent, shall be used.

2. This system allows monitoring of up to sixteen individual zones by manually pressing a button for the desired zone. The audio monitoring system shall be integrated with the IDS to allow listen in capabilities during an alarm event in the Arms Rooms and CWSs.

F. Network Video Recorders (NVRs). NVRs shall be installed to record all VSS activity. The units shall be installed in secured electrical or telecommunications rooms to protect the units from tampering. The USCG Facilities Engineer shall provide the appropriate hardwired communications path or network connection and IP information as specified by the installation contractor. The units shall be configured to alter/improve recording quality when video activity is detected to maximize hard disk utilization.

G. Virtual Matrix Control Systems. Virtual Matrix Control Systems shall communicate directly with the ESS to call up and display selected cameras at the monitoring locations. Bosch, or approved equivalent, workstations are the only approved VSS control systems for USCG applications. Bosch, or approved equivalent, workstations will utilize Video Management

Software (VMS) and ensure virtual matrix operation from any authorized workstation, including existing PCs, as designated by the CSO. Such existing PCs will be connected to the ESS network, and any required equipment such as NIC cards will be installed under the direction of the CSO and Base IT personnel.

H. Power Supplies. Power supplies shall be Bosch, Altronix, or approved equivalent.

1. Each camera shall be powered from an individually fused output, separate from the heater/blower. No plug-in transformers will be allowed.

2. No plug-in transformers will be allowed.

I. Surge Protection.
1. All equipment connected to AC power shall be protected from surges. Equipment protection shall withstand surge test waveforms described in IEEE C62.41. Fuses shall not be used for surge protection.
2. Video and Sync Signal Transmission Line Surge Protection. All cable, except fiber optic cable, used for sync or video signal transmission shall include protective devices to safeguard the VSS equipment against surges. The surge suppression device shall not attenuate or reduce the video, control or sync signal under normal conditions. The surge suppression device shall be capable of dissipating not less than 1500 watts for 1 millisecond, and the response time from zero volts to clamping shall not be greater than 5 nanoseconds. Fuses shall not be used for surge protection.

3. Control Line Surge Protection. All cables and conductors, except fiber optic cables, which serve as communication, control, or signal lines shall be protected against surges and shall have surge protection installed at each end. Protection shall be furnished at the equipment and additional triple electrode gas surge protectors rated for the application on each wire line circuit shall be installed within 3 feet of the building cable entrance. Fuses shall not be used for surge protection. The inputs and outputs shall be tested in both normal mode and common mode using the following waveforms:

A 10-microsecond rise time by 1000 microsecond pulse width waveform with a peak voltage of 1500 volts and a peak current of 60 amperes.

An 8-microsecond rise time by 20-microsecond pulse width waveform with a peak voltage of 1000 volts and a peak current of 500 amperes.

4. Power Line Conditioners. A power line conditioner shall be furnished for security console equipment. The power line conditioner shall be of the Ferro-Resonant design, with no moving parts and no tap switching, while electrically isolating the secondary from the power line side. The power line conditioner shall be sized for 125 percent of the actual connected kVA load. Characteristics of the power line conditioner shall be as follows:

At 85 percent load, the output voltage shall not deviate by more than plus or minus 1 percent of nominal when the input voltage fluctuates between minus 20 percent to plus 10 percent of nominal.

During load changes of zero to full load, the output voltage shall not deviate by more than plus or minus 3 percent of nominal. Full correction of load switching disturbances shall be

accomplished within 5 cycles, and 95 percent correction shall be accomplished within 2 cycles of the onset of the disturbance.

Total harmonic distortion shall not exceed 3 ½ percent at full load.

J. Cabling.

VSS Power Cabling.

2. VSS power cables shall be 18-gauge minimum and shall be sized according to distance and voltage.
Power Cable Color Code VDC+ Red
VDC- Black

3. VSS Video and Data Cabling.

Indoor VSS cabling shall be CAT6 for IP based camera systems, RG-59/U coax for runs less than 750 feet for systems requiring coax. RG-59/U shall have a 20-gauge solid center conductor and 95% braided copper shield. Cable outer jacket material shall be rated for the application. For runs greater than 750 feet, twisted pair or optical fiber shall be used. Refer to Sections 3 and 4 below for determination of fiber type (i.e. single mode or multi-mode).

Outdoor VSS cabling and cabling located in hazardous areas shall be fiber optic. Refer to Sections 4 and 5 below for determination of fiber type (i.e. single mode or multi-mode).

4. Multi-mode Fiber. All fiber runs less than three miles shall be Corning Gigabit Plus CL multi-mode fiber (MM) 62.5/125um two strands minimum. The fiber shall be terminated with ST type connectors, meet or exceed the following performance specifications, and be rated for the use:

Wavelength (850/1300 nm)

Maximum Attenuation 3.5/1.0

Typical Attenuation @ 23 degrees C (db/KM) 3.0/1.0

Minimum LED Bandwidth (MHz KM) 200/500

Gigabit Ethernet Distance Guarantee (M) 300/550

NEC 770 compliant

OFNP and FT-6 listed

All dielectric construction

Operating temperature 0 to +70 C (+32 to + 158 F)

UL-910 (for plenum, riser, and general building applications)

5. Single-Mode Fiber.

All fiber runs greater than three miles shall be Corning MIC single-mode fiber (SM) with a core diameter of approximately nine micrometers. The fiber shall be terminated with ST type connectors, meet or exceed the following performance specifications, and be rated for the use:

Wavelength (1310/1550 nm).

Maximum Attenuation 0.4/0.3.

Typical Attenuation @ 23 degrees C (db/KM) 0.5/0.4.

Gigabit Ethernet Distance Guarantee (M) 5,000.

NEC 770 compliant.

OFNP and FT-6 listed.

All dielectric construction.

Operating temperature 0 to +70 C (+32 to + 158 F).

UL-910 (for plenum, riser, and general building applications.

The manufacturer of the fiber shall certify the installation contractor to install and service the fiber. The contractor shall have all of the proper tools to install, test and certify the fiber system. A certification document will be provided to the USCG CSO's office and the local representative for Facility Engineering upon completion of the system. The contractor will size the cables to include 100% spare capacity for use by USCG.

6. Fiber Systems for IP based systems.

When fiber optic cable is used between network switches, any media conversion devices required shall meet the environmental requirements for such switches (i.e. Hardened/extended temperature), selected to meet the need of the individual site requirements. Link aggregation enabling increased bandwidth through the use of multiple fiber strands shall be utilized to maximize signal transmission bandwidth between switches. All aggregate settings shall be documented.

All fiber equipment shall be supplied with enclosures, mounting hardware, and a UPS or battery backup.

2.4 TASK FOUR. Conduit installation

Installation for conduit will be required to adhere to ICD 705 and UL2050 Extent 3 standards. In any case conduit installation is recommended for certification, the contracting company may install the appropriate conduit.

Conduit and Cabling Installation Standards

a. Metal Conveyance: All security system cabling extending beyond the SCIF perimeter that is not protected by FIPS 140-2/197 encryption shall be installed in a closed, sealed metal conveyance (e.g., EMT or Rigid Conduit).

b. Joint Sealing: All joints, couplings, and connections on external conduit must be permanently sealed completely around all surfaces using welding, industrial epoxy, or fusion to provide a continuous bond. The use of set screws is strictly prohibited.

c. Pull Boxes: Any junction, service, or pull boxes located outside the secure perimeter must be secured with a GSA-approved padlock or AO-approved lock and equipped with IDS tamper switches.

2.5 TASK FIVE. UL2050 Certification

Upon completion of installation, testing, and approval by the facility's Special Security Office (SSO), the Contractor shall directly issue the UL 2050 certificate for the newly installed SCIF security system. The Contractor must provide the physical certificate to the Special Security Officer (SSO) within 24 hours of successful system commissioning.

3.0 CONTRACTOR PERSONNEL

All contracted personnel must be US citizens.

3.1 QUALIFIED PERSONNEL

The contractor must provide technicians that are adequately qualified to complete the scope of work and is experienced with IDS, ACS, and CCTV Security Systems installed in restricted areas at government facilities. Recommended certifications include Certified Alarm Technician (CAT) and Certified Video Systems Specialist (CVSS).

3.2 CONTINUITY OF SUPPORT

Continuity of Support is required when troubleshooting is not successful within the operators' techniques or when system fails for a duration of twenty-four months. A contracted employee that is familiar with the system may assist the member with advanced troubleshooting, remotely via messaging systems (Teams, Text, Phone, E-Mail) or in person.

3.3 GOVERNMENT RESPONSIBILITIES

The government will provide the below outlined items for the completion of requested work:

- Access to the Modular SCIF site
- Procurement of additional equipment or material required for the complete installation and proper function of the IDS, as identified by contractor.
- Material and Equipment listed on

3.3.1 TECHNICAL POINTS OF CONTACTS:

[redacted]

[redacted]

3.4 PROJECT MANAGER

3.4.1 The Project Manager must be available to the COR via telephone between the hours of 0800 and 1530 PST, Monday through Friday, and must respond to a request for discussion or resolution of technical problems within 02 hours of notification.

3.5 EMPLOYEE IDENTIFICATION

3.5.1 Contractor employees working on Government facilities must be on a list sent by the contractor with their proof of U.S. citizenship or driver's license. Contractors must be escorted by a Coast Guard member.

3.5.2 Contractor employees working on-site at Government facilities must wear a government issued identification badge. All Contractor employees must identify themselves as Contractors when their status is not readily apparent (in meetings, when answering Government telephones, in e-mail messages, etc.) and always display the Government issued badge in plain view above the waist.

3.6 EMPLOYEE CONDUCT

Contractor's employees must comply with all applicable Government regulations, policies and procedures (e.g., fire, safety, sanitation, environmental protection, security, "off limits" areas, wearing of parts of DHS uniforms, and possession of weapons) when visiting or working at Government facilities. The Contractor must ensure Contractor employees always present a professional appearance and that their conduct must not reflect discredit on the United States or the Department of Homeland Security. The Project Manager must ensure Contractor

employees understand and abide by Department of Homeland Security established rules, regulations and policies concerning safety and security.

3.7 REMOVING EMPLOYEES FOR MISCONDUCT OR SECURITY REASONS

The Government may, at its sole discretion (via the Contracting Officer*), direct the Contractor to remove any Contractor employee from DHS facilities for misconduct or security reasons. Removal does not relieve the Contractor of the responsibility to continue providing the services required under the contract. The Contracting Officer will provide the Contractor with a written explanation to support any request to remove an employee.

4.0 OTHER APPLICABLE CONDITIONS

4.1 SECURITY

Coordinate with the base security conduct a background check to allow the contractors to enter the base. List of personnel must be provided to the PAC AREA Special Security Office (SSO) or Special Security Manager (SSM). Contracted employees shall be escorted at all times by the SSM.

Contractor may have access to unclassified information, but Security Sensitive Information may be required under this SOW. Contractor employees must safeguard this information against unauthorized disclosure or dissemination.

4.2 PERIOD OF PERFORMANCE

The period of performance for this contract is two months from the date of the award unless otherwise stated by the Special Security Officer.

4.3 PLACE OF PERFORMANCE

The primary place of performance will be the Contractor's facilities with frequent visits to the **United States Coast Guard Sector San Diego, 2710 N Harbor Dr, San Diego, CA 92101.**

4.4 HOURS OF OPERATION

Contractor employees must generally perform all work between the hours of 0700 and 1530 PST, Monday through Friday (except Federal holidays). However, there may be occasions when Contractor employees must be required to work other than normal business hours, including weekends and holidays, to fulfill requirements under this SOW.

4.5 TRAVEL

Contractor travel is not included on the contract and must be procured through their own company. The contractor is responsible to fulfill the requirements under this SOW.

4.6 POST AWARD CONFERENCE

The Contractor must attend a Post Award Conference with the Contracting Officer and the COR no later than 30 business days after the date of award. The purpose of the Post Award Conference, which will be chaired by the Contracting Officer, is to discuss technical and contracting objectives of this contract and review the Contractor's draft project plan. The Post Award Conference will be held via teleconference.

4.7 PROJECT PLAN

The Contractor must provide a draft Project Plan at the Post Award Conference for Government review and comment. The plan, at a minimum, must include: (a) list of work to be performed;(b) project schedule; (c) description of intended results; (d) role of key personnel, if applicable and (e) how quality of service (project) will be maintained throughout life of contract. The Contractor must provide a final Project Plan to the COR not later than 30 business days after the Post Award Conference.

4.8 PROGRESS REPORTS

The Project Manager must provide a weekly report to the Contracting Officer and POC via electronic mail. This report must include a summary of all Contractor work performed, including a breakdown of labor hours by labor category, all direct costs by line item, an assessment of technical progress, schedule status, any travel conducted and any Contractor concerns or recommendations for the previous reporting period.

4.9 PROGRESS MEETINGS

The Project Manager must be available to meet with the COR upon request to present deliverables, discuss progress, exchange information and resolve emergent technical problems and issues. These meetings must take place via *teleconference every week via phone or email.*

4.10 GENERAL REPORT REQUIREMENTS

The Contractor must provide all written reports in electronic format with read/write capability using applications that are compatible with DHS workstations (Microsoft Office Applications).

4.11 PROTECTION OF INFORMATION

Contractor access to information protected under the Privacy Act is required under this SOW. Contractor employees must safeguard this information against unauthorized disclosure or dissemination in accordance with the law and Government policy and regulation

5.0 GOVERNMENT FURNISHED RESOURCES

The Government will furnish a limited selection of resources to the Contractor in support of this contract.

The Contractor must use Government furnished information, data and documents only for the performance of work under this contract and must be responsible for returning all Government furnished information, data and documents to the Government at the end of the performance period. The Contractor must not release Government furnished information, data and documents to outside parties without the prior and explicit consent of the Contracting Officer.

Provided IDS Equipment

Product Model	Description
Bosch B9512G	IDS Control Panel
Bosch ISC-BPR2-WP12	Motion Sensor
ISN-CFM-102W	Door Sensor
NP7-12 x3	12V 7Ah Battery
Bosch B465	Universal Dual Path Communicator Module
Telguard TG Tamper Switch	Tamper Switch for Exterior Box
Telguard TG-7 Verizon	LTE Cellular Antenna and Hardware Module

Provided ACS Equipment

Product Model	Description
AMS-XMAC-1V40	Bosch Access Management System v4.0 License
ARD-SERK40-RO	Badge Reader /w Numpad (external)
ARD-SER10-RO	Badge Reader (internal)
28XP67	Electric Door Strike
ACT-EV1TRF-SA1	MIFARE Key Fob 50ct
AMC-4DOOR-OSDP	Access Management Controller
MHW-WZ2G9-GPU	Badging Workstation

Provided CCTV Equipment

Product Model	Description
AXIS P3265-V x3	Security Camera
CAMERA STATION S2208 MK II STANDALONE APPLIANCE	PoE Switch/Server w/ License
WD 0B36405	8TB HDD

6.0 CONTRACTOR FURNISHED PROPERTY

The Contractor must furnish all facilities, materials, equipment and services necessary to fulfill the requirements of this contract, except for the Government Furnished Resources specified in section 5.0.

The Contractor must furnish all peripheral and auxiliary equipment required for the successful operation of the security systems. This includes, but is not limited to, cabling, connectors, zip ties, rack-mounting hardware, and any specialized tools or consumables necessary for installation and configuration. The Contractor is responsible for procuring and providing all required Contractor Furnished Property in a timely manner.

Upon completion of the project, contracted employees are required to remove all trash and debris generated during the installation process. Employees are also responsible for cleaning and restoring the work area to its original condition.

7.0 GOVERNMENT ACCEPTANCE PERIOD

The COR will review deliverables prior to acceptance and provide the contractor with an e-mail that provides documented reasons for non-acceptance. If the deliverable is acceptable, the COR will send an e-mail to the Contractor notifying it that the deliverable has been accepted.

7.1 The COR will have the right to reject or require correction of any deficiencies found in the deliverables that are contrary to the information contained in the Contractor's accepted proposal. In the event of a rejected deliverable, the Contractor will be notified in writing by the COR of the specific reasons for rejection. The Contractor may have an opportunity to correct the rejected deliverable and return it per delivery instructions.

7.2 The COR will have 5 business days to review deliverables and make comments. The Contractor must have 30 business days to make corrections and redeliver.

7.3 All other review times and schedules for deliverables must be agreed upon by the parties based on the final approved Project Plan. The Contractor must be responsible for timely delivery to Government personnel in the agreed upon review chain, at each stage of the review. The Contractor must work with personnel reviewing the deliverables to assure that the established schedule is maintained.

8.0 DELIVERABLES

Contractor shall provide submittals to the US Coast Guard for approval, prior to ordering any of the materials. The contractor must receive in writing from the US Coast Guard that the submittals are approved by the point of contact prior to ordering the associated materials. At a minimum the following shall be submitted:

1. Schedule and schedule of values
2. Name and phone number for on-site superintendent
3. Safety Plan and Accident Prevention Plan
4. Heavy Equipment license and qualifications
5. Security Systems certifications and qualifications
6. Installation Plan
7. Any required permits and licensing requirements
8. O&M Manuals for lighting, equipment, controls and programming
9. Any product related warranties
10. Quality Control Plan
11. 1-year general warranty per the Federal Acquisition Regulation (FAR)
12. Installation documentation
13. Equipment test documentation
14. A completed DHS Denver Mega Center Request Form
15. Security Equipment Training Plan

Timely submission of deliverables is essential to successfully completing this requirement.

8.1.1 Reporting Requirements: The contractor is required to provide daily verbal progress reports to the contracting officer or their representative. The progress report must cover all work completed for that day. The report shall outline any potential problems or barriers that may preclude the completion of project within the projected project duration. This report must also identify any problems that arose and a statement explaining how the problem was resolved. This report must also identify any problems that have arisen but have not been completely resolved and provide an explanation.

8.1.2 Notice to offerors: All information and data related to this project that the contractor gathers or obtains shall be both protected from unauthorized release and considered the property of the government. The contracting officer will be the sole authorized official to release verbally or in writing, any data, the draft deliverables, the final deliverables, or any other written or printed materials pertaining to this contract. Press releases, marketing material, or any other printed or electronic documentation related to this project, must not be publicized without the written approval of the contracting officer.

9.0 ELECTRONIC SUBMISSION OF PAYMENT REQUESTS

All invoices from the Contractor shall be submitted electronically IAW FAR 52.232.33, Payment by Electronic Funds Transfer-System for Award Management**. "***Electronic submission of Invoices is mandatory"*

The Contractor shall submit a monthly invoice for services via the Invoice Processing Platform (IPP) at https://www.ipp.gov/. IPP is a government-wide, secure web-based payment information service offered free of charge to government agencies and their suppliers by the U.S. Department of Treasury's Bureau of the Fiscal Service. It requires enrollment if you are not yet enrolled.

The point of contact you provided in your SAM.gov registration will receive two emails from ipp.noreply@mail.eroc.twai.gov if your entity is not already enrolled in IPP:

The first email will have the IPP Logon ID and a link to the IPP application.

A second email, which will be sent within 24 hours of the first email, contains an IPP password. Once your contact receives these emails, please ensure they log into IPP and complete the registration process.

Training materials that address all IPP capabilities are available on the IPP website after login and https://www.ipp.gov/vendors/training-vendors.

Once registered to use IPP, your company may submit payment requests, receive e-mail notifications when requests are paid, view payment history, and access remittance downloads. The e-mail notification of payment is sent when a payment is distributed to your bank account and may include the following payment information: Date of payment, dollar amount, invoice number, paying agency, payee name, and ACH trace number.

IPP Customer Support is available to assist users of the system and can answer your questions related to accessing IPP or completing the registration process.

- Toll-free number: 866-973-3131
- Email address: IPPCustomerSupport@fiscal.treasury.gov
- Hours of operation: Monday through Friday (excluding bank holidays) from 8:00 am - 6:00 pm ET

The Contractor shall attach a single PDF file no larger than 3MB as the official invoice.

Supporting documentation must be combined in a single PDF file or submitted to your contracting office separately via email. Supporting documentation must not exceed 999 pages.

A proper invoice shall have the following information clearly indicated on each invoice: (i) Name and address of the Contractor; (ii) Invoice date and number (the Contractor is encouraged to date invoices as close as possible to the date of the mailing transmission); (iii) Contract number, contract line item number and, if applicable the order number; (iv) Description, quantity, unit of measure, unit price, and extended price of the items delivered or services performed; (v) terms

of any discount for prompt payment offered; (vi) Name and address of official to whom payment is sent; (vii) Name, title, and phone number of person to be notified in the event of a defective invoice; (viii) Taxpayer Identification Number (TIN). The Contractor shall include its TIN on the invoice; (ix) Electronic funds transfer (EFT) banking information; (x) UEI number recorded on every invoice submitted.

If you have difficulties sending your invoice, contact the Finance Center's Customer Service Team at (757) 523-6940.

A copy of the Invoice and Supporting documentation shall also be e-mailed to the assigned contract specialist, COR, and LOG-94 invoice support personnel prior to or immediately after submitting your invoice to the IPP system as described above. Failure to do this may result in the delay of payment. These POCs will be given at time of award.

Enclosure 1
ARMAG Diagrams

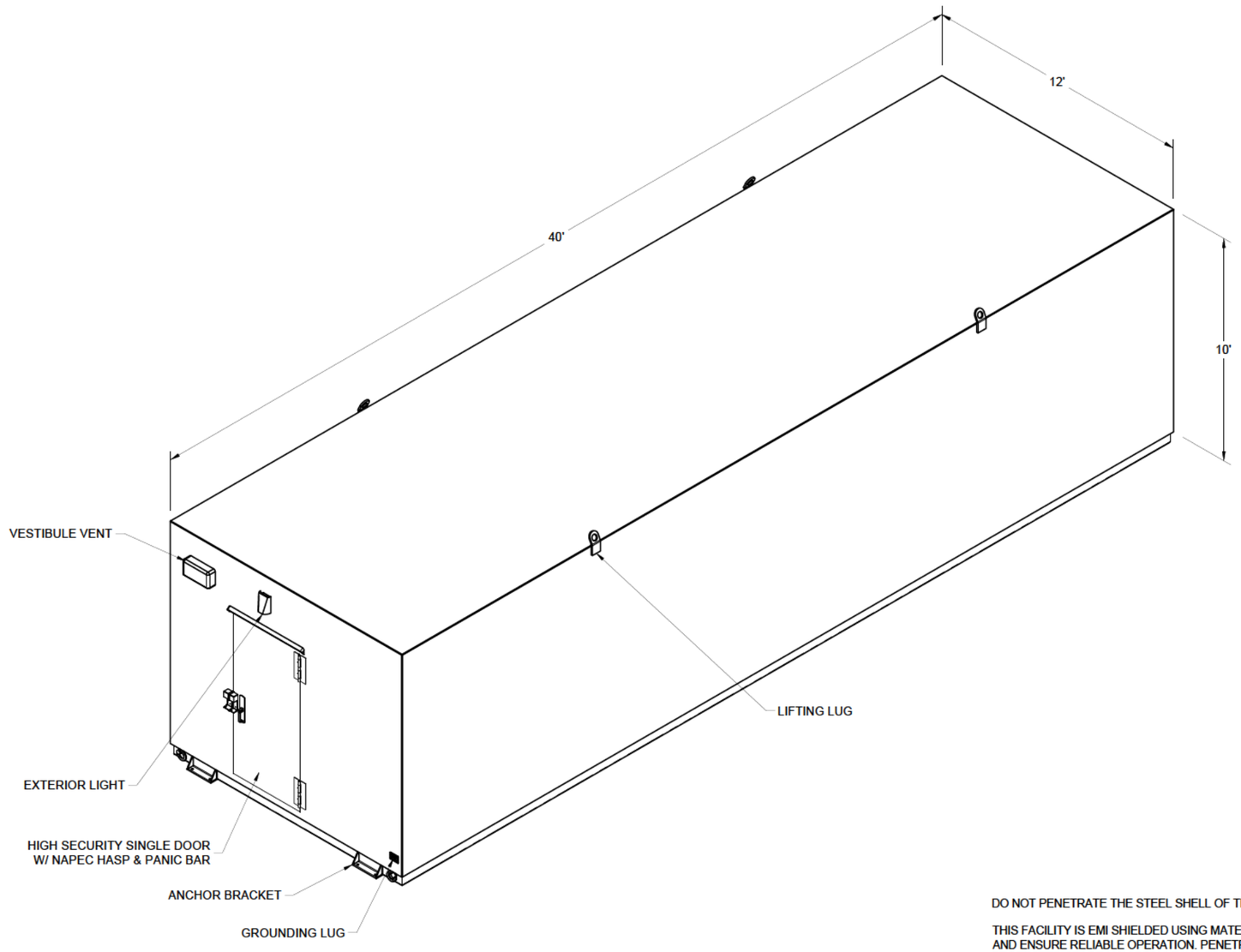

DO NOT PENETRATE THE STEEL SHELL OF THE PROTECTED SPACE

THIS FACILITY IS EMI SHIELDED USING MATERIAL AND TECHNIQUES IN ORDER TO PROTECT EQUIPMENT AND ENSURE RELIABLE OPERATION. PENETRATION OF THE STEEL WALLS, FLOOR OR ROOF OF THE PROTECTED SPACE MAY RESULT IN LOSS OF SHIELDING EFFECTIVENESS.

***ANY MODIFICATIONS MAY REQUIRE TESTING OF THE FACILITY TO ENSURE SHIELDING EFFECTIVENESS. CONSULT THE MANUFACTURER BEFORE DRILLING, CUTTING OR WELDING.

LEGEND:

- KILL SWITCH
- DURESS
- ELECTRIC RECEPTACLE
- DS DOUBLE STACKED
- SS SINGLE STACKED
- EMR EMERGENCY LIGHT
- P TELEPHONE JACK
- L LAN CONNECTION
- SE SEISMIC SENSOR
- SM SMOKE DETECTION
- PIR PIR
- BT BULLET TRAP

LEGEND CONTINUED:

- THERMOSTAT
- GROUND

UNLESS OTHERWISE NOTED, TOLERANCES ARE:
FRACTIONS: ±1/16 ANGLES: ±1°
MACHINED SURFACES: 125 MICRO-INCHES
THESE TOLERANCES DO NOT APPLY TO BASIC DIMS.
DRAWN TO SCALE UNLESS OTHERWISE NOTED

THIS DRAWING IS THE PROPERTY OF ARMAG CORPORATION WHO CLAIMS PROPRIETARY RIGHTS IN THE MATERIAL DISCLOSED. IT IS ISSUED IN CONFIDENCE FOR ENGINEERING INFORMATION ONLY AND MAY NOT BE COPIED OR USED FOR MANUFACTURE OF ANYTHING SHOWN WITHOUT SPECIFIC PERMISSION FROM ARMAG CORPORATION

UNIT LENGTH	UNIT WIDTH	UNIT HEIGHT
40'	12'	10'

UNIT SPEC: ICD 705
UNIT TYPE: ARC VAULT
CUSTOMER: ADS
LOCATION: LONG BEACH, CA
SERIAL #: 12742-01
QUOTE #: 44310BR3.2

ARMAG® CORPORATION
Manufacturers of Arms Vaults and Explosive Storage magazines since 1969
300 ARMAG AVE. • BARDSTOWN, KY 40004 • PHONE: (800) 443-9994 • FAX: (502) 348-4801 • EMAIL: info@armagcorp.com

DESCRIPTION: 60dB SHIELDED ARC VAULT WITH NETWORK CABINETS AND FIBER OPTIC PACKAGE

LINING: STC 50
EXT. FINISH: "DESERT TAN" - ZINC PRIMER / DEVTHANE 349QC

DRAWN BY	REVISION
JMS	A
DATE DRAWN: 08/06/2025	
APPROVED BY: -	APPROX. SHIPPING WT. IN LBS: 64,000
SHEET SIZE: B	
SCALE: 1:48	DRAWING NO.: S4407
SHEET: 1 OF 11	

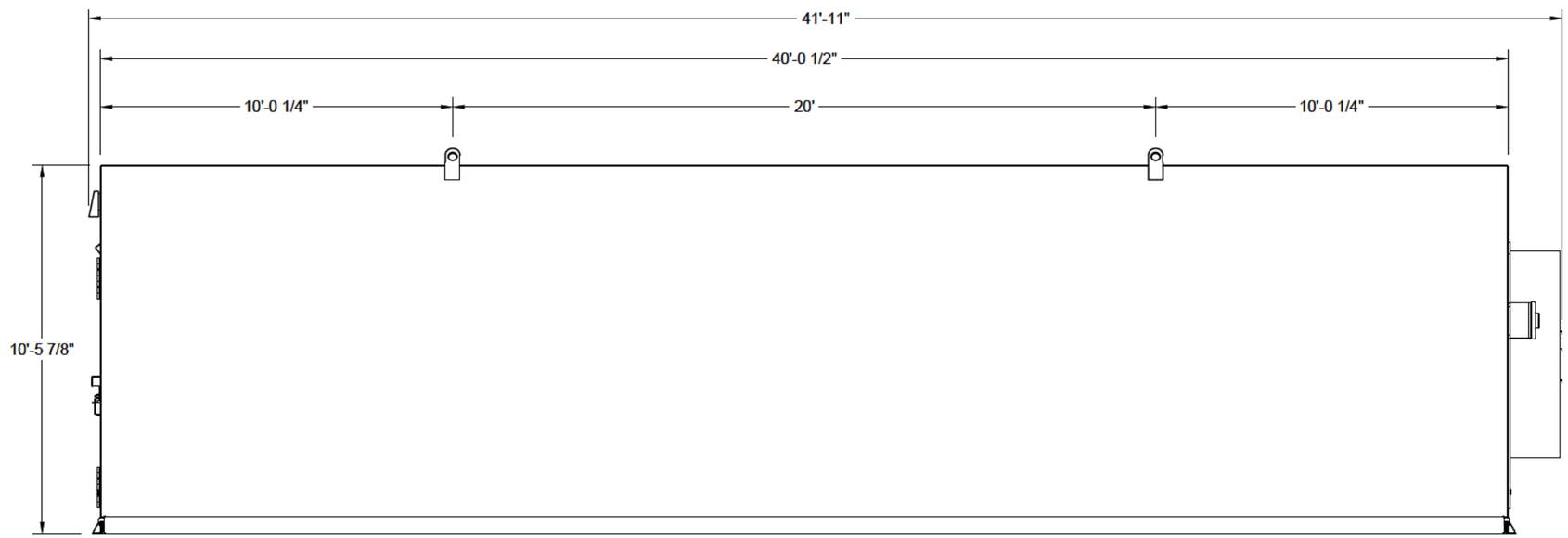

RIGHT SIDE ELEVATION

LEGEND:

- KILL SWITCH
- DURESS
- ELECTRIC RECEPTACLE
- DS DOUBLE STACKED
- SS SINGLE STACKED
- EMR EMERGENCY LIGHT
- TP TELEPHONE JACK
- LC LAN CONNECTION
- SE SEISMIC SENSOR
- SM SMOKE DETECTION
- PIR PIR
- BT BULLET TRAP

LEGEND CONTINUED:

- THERMOSTAT
- GROUND

UNLESS OTHERWISE NOTED, TOLERANCES ARE:
FRACTIONS: ±1/16 ANGLES: ±1°
MACHINED SURFACES: 125 MICRO-INCHES
THESE TOLERANCES DO NOT APPLY TO BASIC DIMS.
DRAWN TO SCALE UNLESS OTHERWISE NOTED

THIS DRAWING IS THE PROPERTY OF ARMAG CORPORATION WHO CLAIMS PROPRIETARY RIGHTS IN THE MATERIAL DISCLOSED. IT IS ISSUED IN CONFIDENCE FOR ENGINEERING INFORMATION ONLY AND MAY NOT BE COPIED OR USED FOR MANUFACTURE OF ANYTHING SHOWN WITHOUT SPECIFIC PERMISSION FROM ARMAG CORPORATION

UNIT LENGTH	UNIT WIDTH	UNIT HEIGHT
40'	12'	10'

UNIT SPEC: ICD 705
UNIT TYPE: ARC VAULT
CUSTOMER: ADS
LOCATION: LONG BEACH, CA
SERIAL #: 12742-01
QUOTE #: 44310BR3.2

ARMAG® CORPORATION
Manufacturers of Arms Vaults and Explosive Storage magazines since 1969
300 ARMAG AVE. • BARDSTOWN, KY 40004 • PHONE: (800) 443-9994 • FAX: (502) 348-4801 • EMAIL: info@armagcorp.com

DESCRIPTION: 60dB SHIELDED ARC VAULT WITH NETWORK CABINETS AND FIBER OPTIC PACKAGE

LINING: STC 50
EXT. FINISH: "DESERT TAN" - ZINC PRIMER / DEVTHANE 349QC

DRAWN BY	JMS
DATE DRAWN	08/06/2025
APPROVED BY	-
SHEET SIZE	B
SCALE	####
SHEET	2 OF 11
REVISION	A
APPROX. SHIPPING WT. IN LBS	64,000
DRAWING NO.	S4407

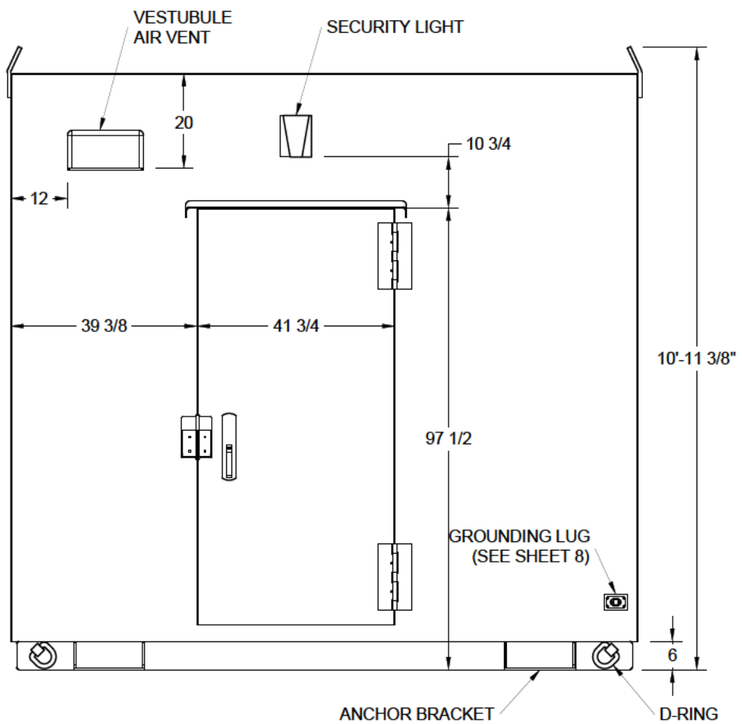

FRONT ELEVATION

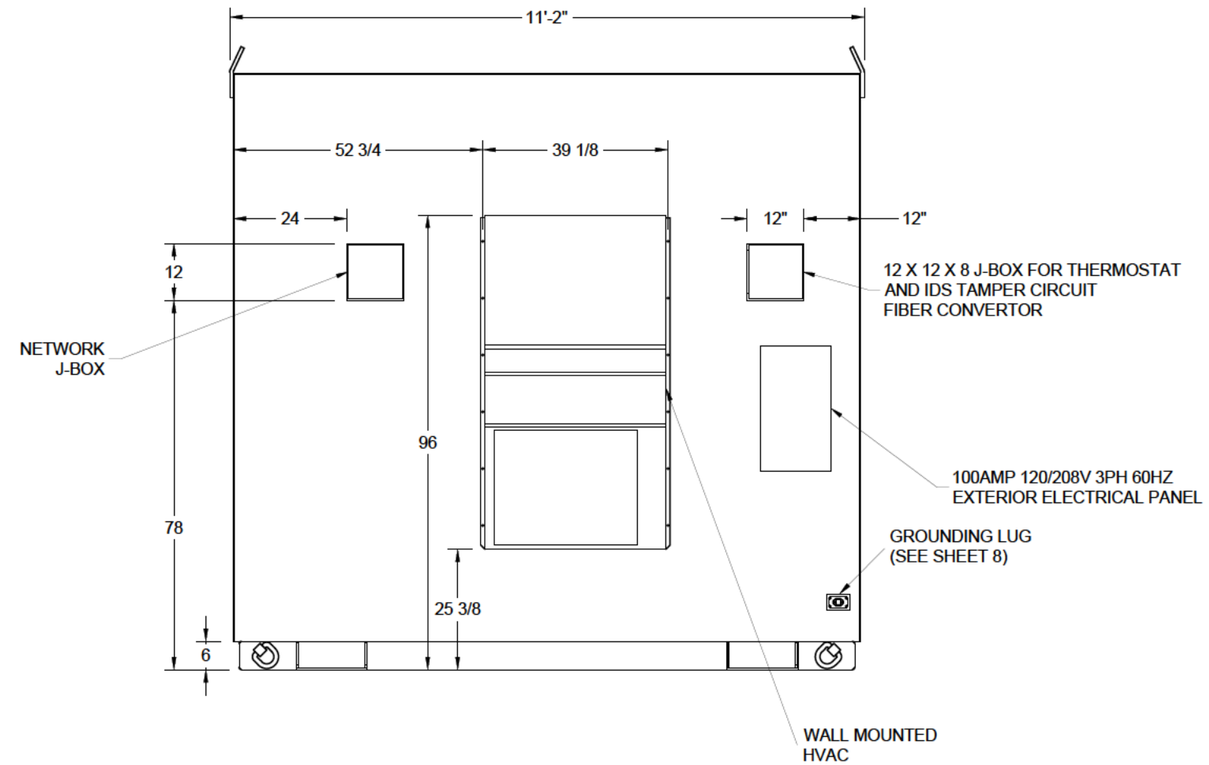

REAR ELEVATION

LEGEND:

- KILL SWITCH
- DURESS
- ELECTRIC RECEPTACLE
- DS DOUBLE STACKED
- SS SINGLE STACKED
- EMR EMERGENCY LIGHT
- TJ TELEPHONE JACK
- LJ LAN CONNECTION
- SE SEISMIC SENSOR
- SM SMOKE DETECTION
- PIR PIR
- BT BULLET TRAP

LEGEND CONTINUED:

- T THERMOSTAT
- GROUND

UNLESS OTHERWISE NOTED, TOLERANCES ARE:
FRACTIONS: ±1/16 ANGLES: ±1°
MACHINED SURFACES: 125 MICRO-INCHES
THESE TOLERANCES DO NOT APPLY TO BASIC DIMS.
DRAWN TO SCALE UNLESS OTHERWISE NOTED

THIS DRAWING IS THE PROPERTY OF ARMAG CORPORATION WHO CLAIMS PROPRIETARY RIGHTS IN THE MATERIAL DISCLOSED. IT IS ISSUED IN CONFIDENCE FOR ENGINEERING INFORMATION ONLY AND MAY NOT BE COPIED OR USED FOR MANUFACTURE OF ANYTHING SHOWN WITHOUT SPECIFIC PERMISSION FROM ARMAG CORPORATION

UNIT LENGTH	UNIT WIDTH	UNIT HEIGHT
40'	12'	10'

UNIT SPEC: ICD 705
UNIT TYPE: ARC VAULT
CUSTOMER: ADS
LOCATION: LONG BEACH, CA
SERIAL #: 12742-01
QUOTE #: 44310BR3.2

ARMAG® CORPORATION
Manufacturers of Arms Vaults and Explosive Storage magazines since 1969
300 ARMAG AVE. • BARDSTOWN, KY 40004 • PHONE: (800) 443-9994 • FAX: (502) 348-4801 • EMAIL: info@armagcorp.com

DESCRIPTION: 60dB SHIELDED ARC VAULT WITH NETWORK CABINETS AND FIBER OPTIC PACKAGE

LINING: STC 50
EXT. FINISH: "DESERT TAN" - ZINC PRIMER / DEVTHANE 349QC

DRAWN BY	REVISION
JMS	A
DATE DRAWN: 08/06/2025	
APPROVED BY: -	APPROX. SHIPPING WT. IN LBS: 64,000
SHEET SIZE: B	
SCALE: ####	DRAWING NO.: S4407
SHEET: 3 OF 11	

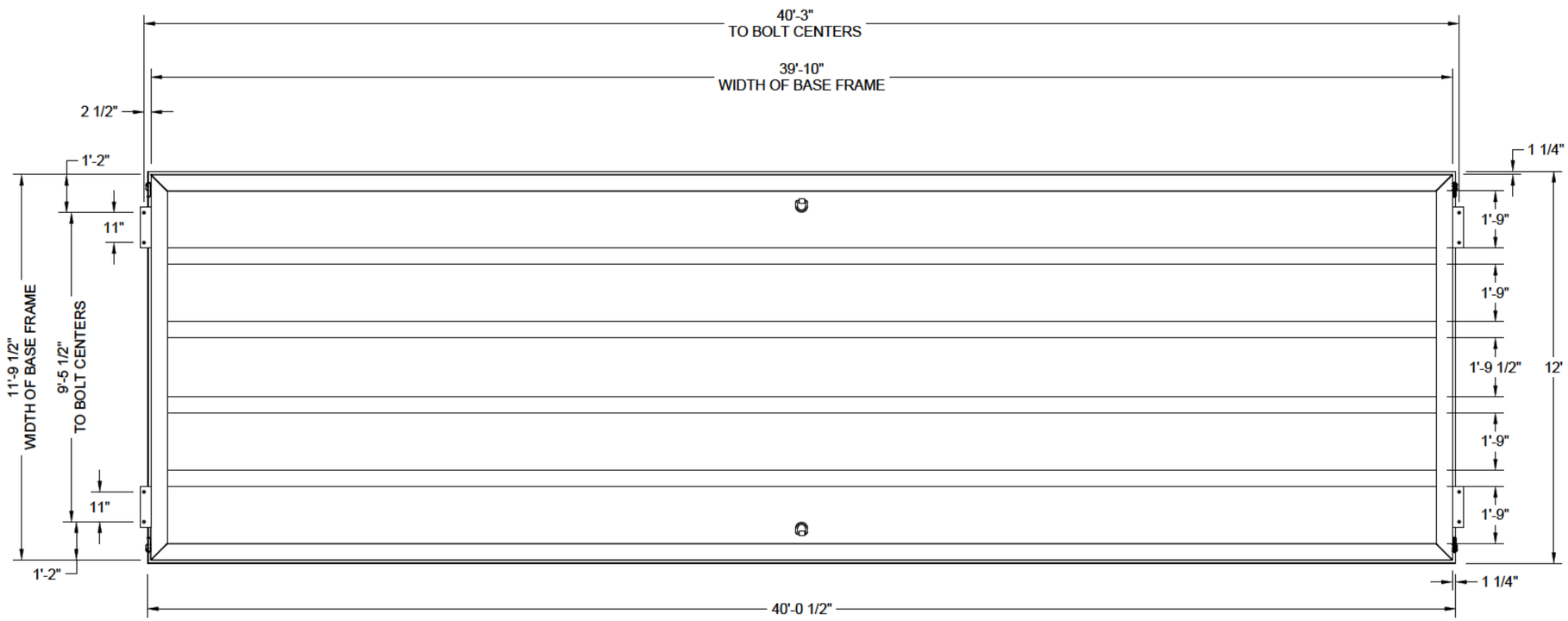

BASE FRAMING PLAN

LEGEND:

- KILL SWITCH
- DURESS
- ELECTRIC RECEPTACLE
- DS DOUBLE STACKED
- SS SINGLE STACKED
- EMR EMERGENCY LIGHT
- TELEPHONE JACK
- LAN CONNECTION
- SE SEISMIC SENSOR
- SM SMOKE DETECTION
- PIR PIR
- BT BULLET TRAP

LEGEND CONTINUED:

- THERMOSTAT
- GROUND

UNLESS OTHERWISE NOTED, TOLERANCES ARE:
FRACTIONS: ±1/16 ANGLES: ±1°
MACHINED SURFACES: 125 MICRO-INCHES
THESE TOLERANCES DO NOT APPLY TO BASIC DIMS.
DRAWN TO SCALE UNLESS OTHERWISE NOTED

THIS DRAWING IS THE PROPERTY OF ARMAG CORPORATION WHO CLAIMS PROPRIETARY RIGHTS IN THE MATERIAL DISCLOSED. IT IS ISSUED IN CONFIDENCE FOR ENGINEERING INFORMATION ONLY AND MAY NOT BE COPIED OR USED FOR MANUFACTURE OF ANYTHING SHOWN WITHOUT SPECIFIC PERMISSION FROM ARMAG CORPORATION

UNIT LENGTH	UNIT WIDTH	UNIT HEIGHT
40'	12'	10'

UNIT SPEC: ICD 705
UNIT TYPE: ARC VAULT
CUSTOMER: ADS
LOCATION: LONG BEACH, CA
SERIAL #: 12742-01
QUOTE #: 44310BR3.2

ARMAG® CORPORATION
Manufacturers of Arms Vaults and Explosive Storage magazines since 1969
300 ARMAG AVE. • BARDSTOWN, KY 40004 • PHONE: (800) 443-9994 • FAX: (502) 348-4801 • EMAIL: info@armagcorp.com

DESCRIPTION: 60dB SHIELDED ARC VAULT WITH NETWORK CABINETS AND FIBER OPTIC PACKAGE

LINING: STC 50

EXT. FINISH: "DESERT TAN" - ZINC PRIMER / DEVTHANE 349QC

DRAWN BY	JMS
DATE DRAWN	08/06/2025
APPROVED BY	-
SHEET SIZE	B
SCALE	####
SHEET	4 OF 11
REVISION	A
APPROX. SHIPPING WT. IN LBS	64,000
DRAWING NO.	S4407

DOOR SCHEDULE				
DOOR	QTY	SIZE / SWING	DESCRIPTION	HARDWARE
1	1	3070 / RHR	ARMAG HIGH SECURITY DOOR, A-36 STEEL W/ 2" HARDWOOD	MIL-DTL-29181 HIGH SECURITY HASP / PANIC BAR EXIT DEVICE
2	1	3070 / LR	18 GA COMMERCIAL METAL DOOR W/ 16 GA FRAME	COMMERCIAL LEVER LOCKSET / CLOSER / WEATHER STRIPPING
3	1	3070 / RHR	RF SHIELDED ACOUSTIC COMBO DOOR W/ FRAME, MEETING ICD 705 SOUND GROUP 4	LKM10K - X10 W/ KEY OVERRIDE / CLOSER
4	1	3070 / LH	18 GA COMMERCIAL METAL DOOR W/ 16 GA FRAME	COMMERCIAL LEVER LOCKSET / LOUVER / CLOSER

FINISH SCHEDULE		
SURFACE	MATERIAL	COLOR
EXTERIOR	DEVOE DEVATHANE 349QC	DESERT TAN
INTERIOR WALLS	DEVOE DEVFLEX LATEX	WHITE
CEILING	DEVOE DEVFLEX LATEX	WHITE
DOORS + FRAMES	DEVOE DEVTHANE 349QC	GREY
BASE MOULDING	FLEXCO 2000 TPR WALL BASE, 4" COVE	BLACK
FLOORS	ARMASTRONG COMMERCIAL VCT	51915 CHARCOAL

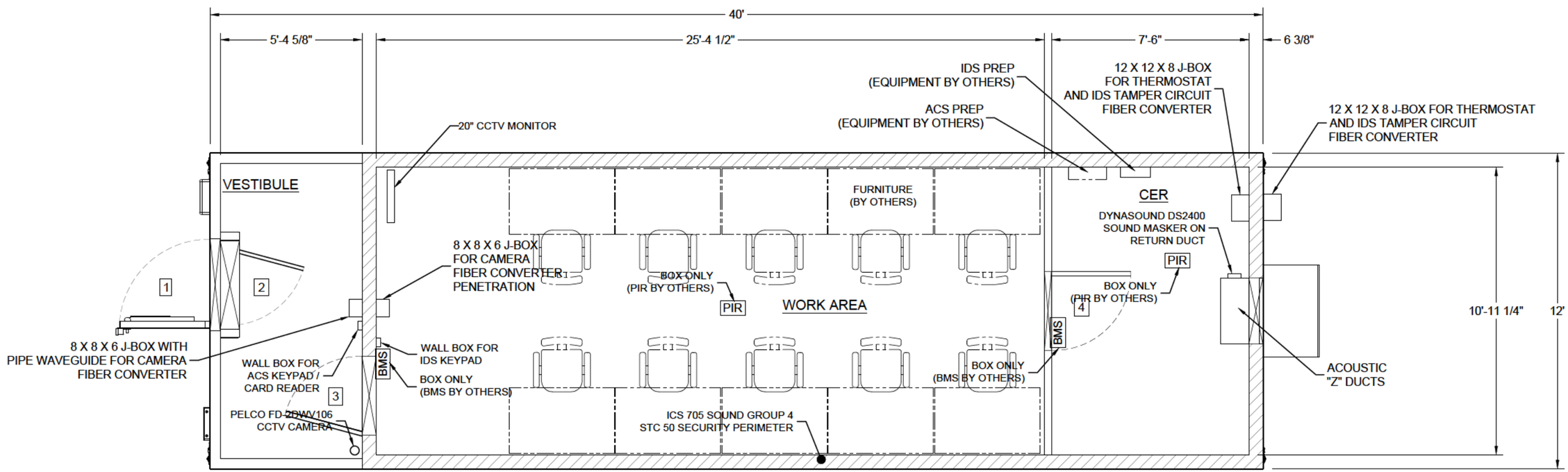

FLOOR PLAN

LEGEND:

- KILL SWITCH
- DURESS
- ELECTRIC RECEPTACLE
- DS DOUBLE STACKED
- SS SINGLE STACKED
- EMR EMERGENCY LIGHT
- P TELEPHONE JACK
- L LAN CONNECTION
- SE SEISMIC SENSOR
- SM SMOKE DETECTION
- PIR PIR
- BT BULLET TRAP

LEGEND CONTINUED:

- T THERMOSTAT
- GROUND

UNLESS OTHERWISE NOTED, TOLERANCES ARE:
FRACTIONS: ±1/16 ANGLES: ±1°
MACHINED SURFACES: 125 MICRO-INCHES
THESE TOLERANCES DO NOT APPLY TO BASIC DIMS.
DRAWN TO SCALE UNLESS OTHERWISE NOTED

THIS DRAWING IS THE PROPERTY OF ARMAG CORPORATION WHO CLAIMS PROPRIETARY RIGHTS IN THE MATERIAL DISCLOSED. IT IS ISSUED IN CONFIDENCE FOR ENGINEERING INFORMATION ONLY AND MAY NOT BE COPIED OR USED FOR MANUFACTURE OF ANYTHING SHOWN WITHOUT SPECIFIC PERMISSION FROM ARMAG CORPORATION

UNIT LENGTH 40'	UNIT WIDTH 12'	UNIT HEIGHT 10'
UNIT SPEC ICD 705		
UNIT TYPE ARC VAULT		
CUSTOMER ADS		
LOCATION LONG BEACH, CA		
SERIAL # 12742-01	QUOTE # 44310BR3.2	

ARMAG® CORPORATION
Manufacturers of Arms Vaults and Explosive Storage magazines since 1969
300 ARMAG AVE. • BARDSTOWN, KY 40004 • PHONE: (800) 443-9994 • FAX: (502) 348-4801 • EMAIL: info@armagcorp.com

DESCRIPTION
60dB SHIELDED ARC VAULT WITH NETWORK CABINETS AND FIBER OPTIC PACKAGE

LINING: STC 50

EXT. FINISH: "DESERT TAN" - ZINC PRIMER / DEVTHANE 349QC

DRAWN BY JMS	REVISION A
DATE DRAWN 08/06/2025	
APPROVED BY -	APPROX. SHIPPING WT. IN LBS 64,000
SHEET SIZE B	
SCALE ####	DRAWING NO. S4407
SHEET 5 OF 11	

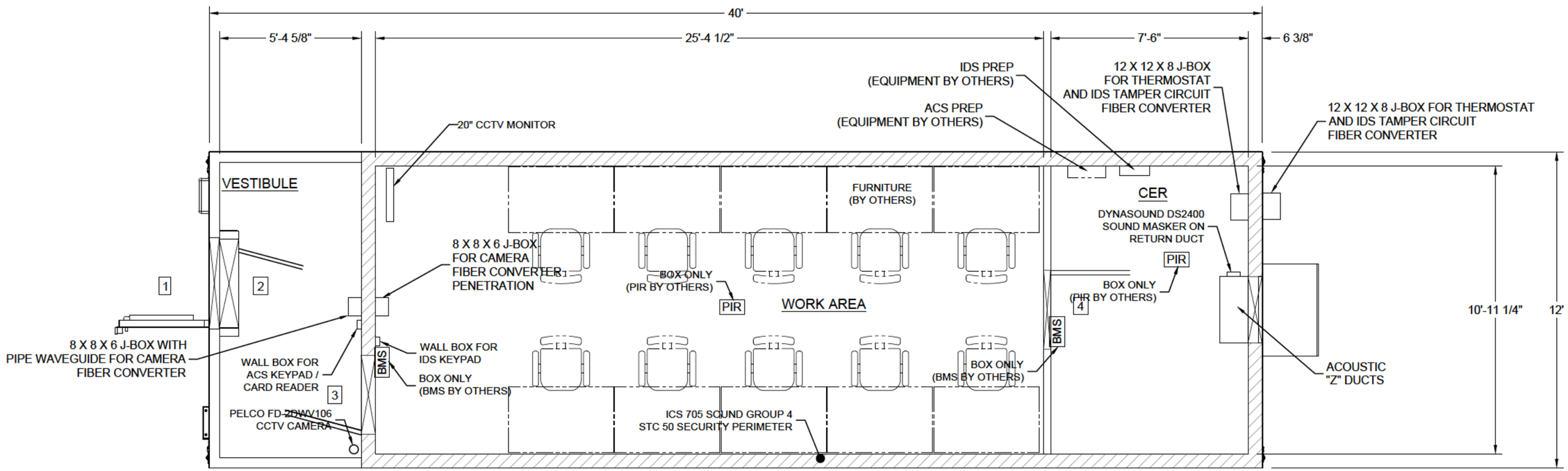

NOTE: IDS AND ACCESS CONTROL SYSTEMS
ARE BY OTHERS.

SECURITY PLAN

LEGEND:

- KILL SWITCH
- DURESS
- ELECTRIC RECEPTACLE
- DS DOUBLE STACKED
- SS SINGLE STACKED
- EMR EMERGENCY LIGHT
- TELEPHONE JACK
- LAN CONNECTION
- SE SEISMIC SENSOR
- SM SMOKE DETECTION
- PIR PIR
- BT BULLET TRAP

LEGEND CONTINUED:

- T THERMOSTAT
- GROUND

UNLESS OTHERWISE NOTED, TOLERANCES ARE:
FRACTIONS: ±1/16 ANGLES: ±1°
MACHINED SURFACES: 125 MICRO-INCHES
THESE TOLERANCES DO NOT APPLY TO BASIC DIMS.
DRAWN TO SCALE UNLESS OTHERWISE NOTED

THIS DRAWING IS THE PROPERTY OF ARMAG CORPORATION WHO CLAIMS PROPRIETARY RIGHTS IN THE MATERIAL DISCLOSED. IT IS ISSUED IN CONFIDENCE FOR ENGINEERING INFORMATION ONLY AND MAY NOT BE COPIED OR USED FOR MANUFACTURE OF ANYTHING SHOWN WITHOUT SPECIFIC PERMISSION FROM ARMAG CORPORATION

UNIT LENGTH	UNIT WIDTH	UNIT HEIGHT
40'	12'	10'

UNIT SPEC: ICD 705
UNIT TYPE: ARC VAULT
CUSTOMER: ADS
LOCATION: LONG BEACH, CA
SERIAL #: 12742-01
QUOTE #: 44310BR3.2

ARMAG® CORPORATION
Manufacturers of Arms Vaults and Explosive Storage magazines since 1969
300 ARMAG AVE. • BARDSTOWN, KY 40004 • PHONE: (800) 443-9994 • FAX: (502) 348-4801 • EMAIL: info@armagcorp.com

DESCRIPTION: 60dB SHIELDED ARC VAULT WITH NETWORK CABINETS AND FIBER OPTIC PACKAGE

LINING: STC 50
EXT. FINISH: "DESERT TAN" - ZINC PRIMER / DEVTHANE 349QC

DRAWN BY	REVISION
JMS	A
DATE DRAWN: 08/06/2025	
APPROVED BY: -	APPROX. SHIPPING WT. IN LBS: 64,000
SHEET SIZE: B	
SCALE: ####	DRAWING NO.: S4407
SHEET: 6 OF 11	

LIGHTING SCHEDULE			
ITEM #	QTY	DESCRIPTION	MFG / PART NUMBER
A	9	4' - LED LIGHT FIXTURE	RAB LIGHTING / SEAL 4
B	1	EXTERIOR 18W LED WALL PACK LIGHT	RAB LIGHTING / SLIM
C	3	LED EXIT / EMERGENCY LIGHT	HUBBLE LIGHTING / EVCURW

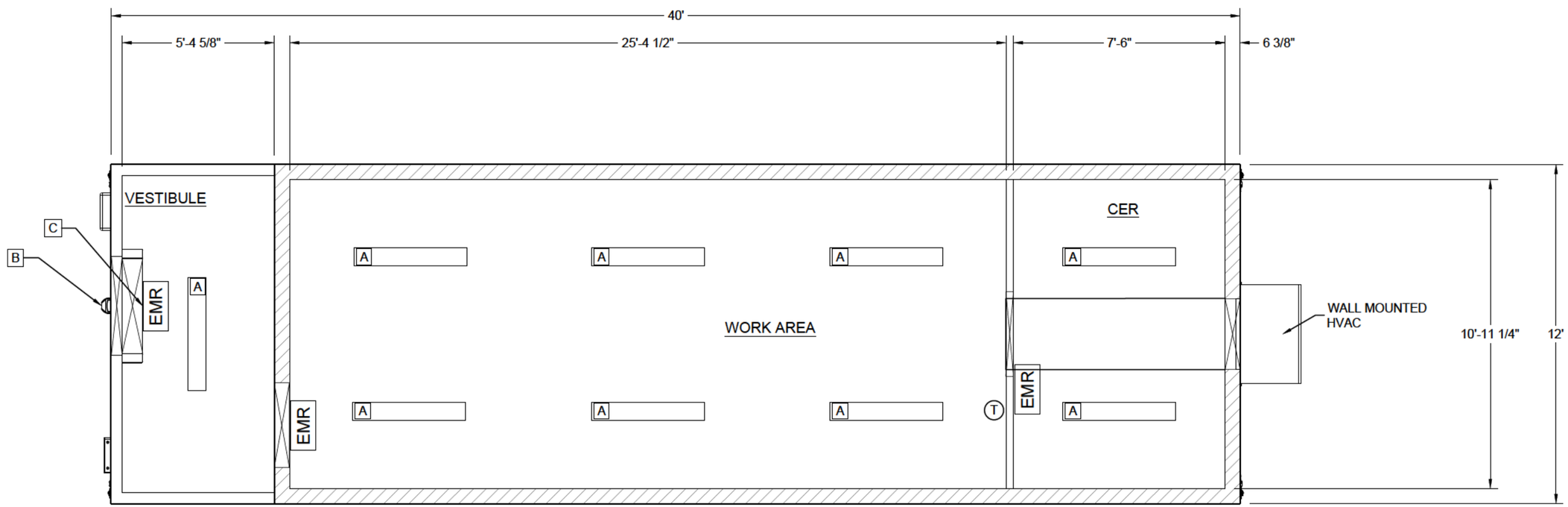

LIGHTING / HVAC PLAN

LEGEND:

- KILL SWITCH
- DURESS
- ELECTRIC RECEPTACLE
- DS DOUBLE STACKED
- SS SINGLE STACKED
- EMS EMERGENCY LIGHT
- TELEPHONE JACK
- LAN CONNECTION
- SE SEISMIC SENSOR
- SM SMOKE DETECTION
- PIR PIR
- BT BULLET TRAP

LEGEND CONTINUED:

- T THERMOSTAT
- GROUND

UNLESS OTHERWISE NOTED, TOLERANCES ARE:
FRACTIONS: ±1/16 ANGLES: ±1°
MACHINED SURFACES: 125 MICRO-INCHES
THESE TOLERANCES DO NOT APPLY TO BASIC DIMS.
DRAWN TO SCALE UNLESS OTHERWISE NOTED

THIS DRAWING IS THE PROPERTY OF ARMAG CORPORATION WHO CLAIMS PROPRIETARY RIGHTS IN THE MATERIAL DISCLOSED. IT IS ISSUED IN CONFIDENCE FOR ENGINEERING INFORMATION ONLY AND MAY NOT BE COPIED OR USED FOR MANUFACTURE OF ANYTHING SHOWN WITHOUT SPECIFIC PERMISSION FROM ARMAG CORPORATION

UNIT LENGTH 40'	UNIT WIDTH 12'	UNIT HEIGHT 10'
UNIT SPEC ICD 705		
UNIT TYPE ARC VAULT		
CUSTOMER ADS		
LOCATION LONG BEACH, CA		
SERIAL # 12742-01	QUOTE # 44310BR3.2	

ARMAG® CORPORATION
Manufacturers of Arms Vaults and Explosive Storage magazines since 1969
300 ARMAG AVE. • BARDSTOWN, KY 40004 • PHONE: (800) 443-9994 • FAX: (502) 348-4801 • EMAIL: info@armagcorp.com

DESCRIPTION: 60dB SHIELDED ARC VAULT WITH NETWORK CABINETS AND FIBER OPTIC PACKAGE

LINING: STC 50

EXT. FINISH: "DESERT TAN" - ZINC PRIMER / DEVTHANE 349QC

DRAWN BY	JMS
DATE DRAWN	08/06/2025
APPROVED BY	-
SHEET SIZE	B
SCALE	####
SHEET	7 OF 11
REVISION	A
APPROX. SHIPPING WT. IN LBS	64,000
DRAWING NO.	S4407

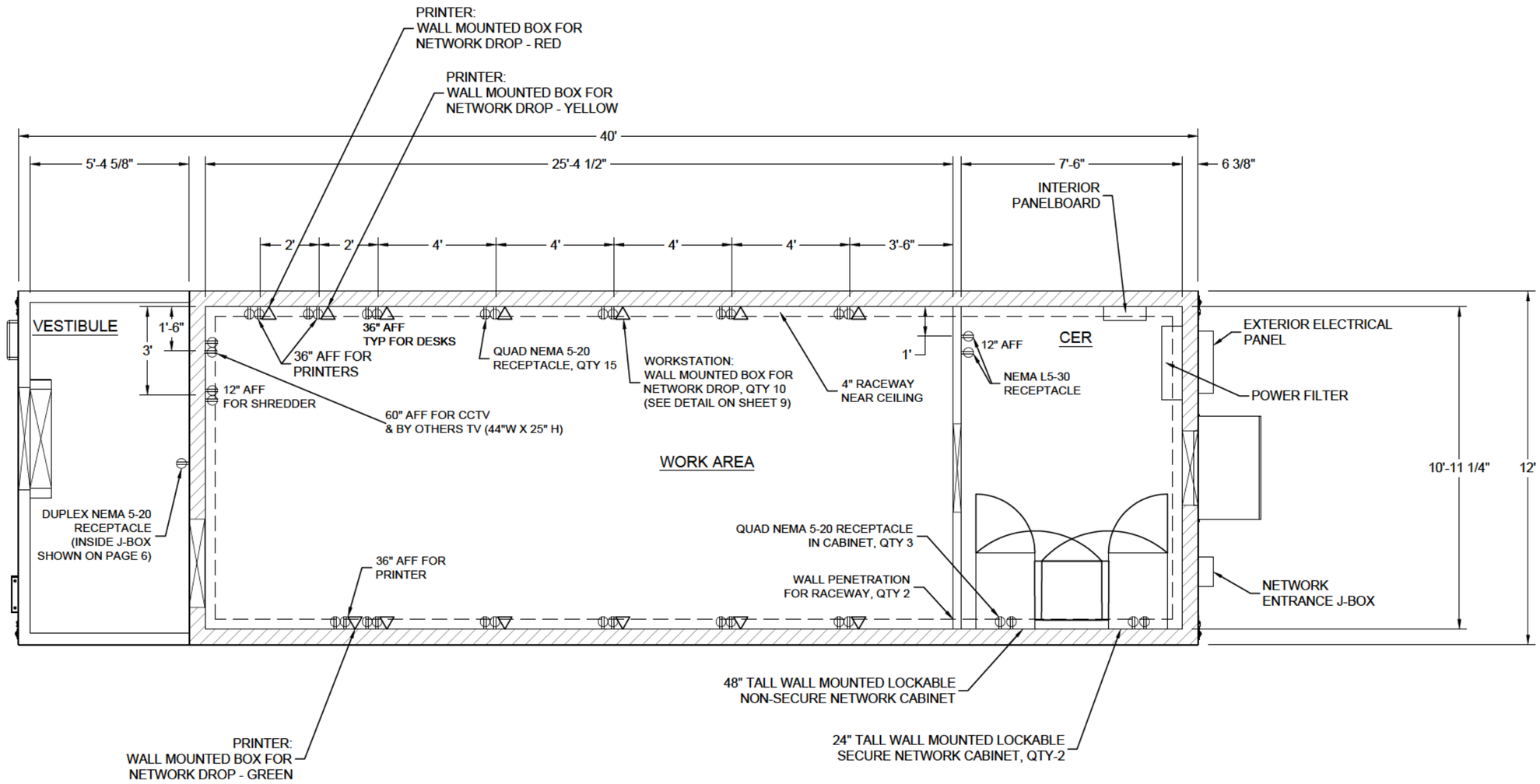

ELECTRICAL / NETWORKING PLAN

LEGEND:

- KILL SWITCH
- DURESS
- ELECTRIC RECEPTACLE
- DS DOUBLE STACKED
- SS SINGLE STACKED
- EMR EMERGENCY LIGHT
- P TELEPHONE JACK
- D LAN CONNECTION
- SE SEISMIC SENSOR
- SM SMOKE DETECTION
- PIR PIR
- BT BULLET TRAP

LEGEND CONTINUED:

- T THERMOSTAT
- GROUND

UNLESS OTHERWISE NOTED, TOLERANCES ARE:
FRACTIONS: ±1/16 ANGLES: ±1°
MACHINED SURFACES: 125 MICRO-INCHES
THESE TOLERANCES DO NOT APPLY TO BASIC DIMS.
DRAWN TO SCALE UNLESS OTHERWISE NOTED

THIS DRAWING IS THE PROPERTY OF ARMAG CORPORATION WHO CLAIMS PROPRIETARY RIGHTS IN THE MATERIAL DISCLOSED. IT IS ISSUED IN CONFIDENCE FOR ENGINEERING INFORMATION ONLY AND MAY NOT BE COPIED OR USED FOR MANUFACTURE OF ANYTHING SHOWN WITHOUT SPECIFIC PERMISSION FROM ARMAG CORPORATION

UNIT LENGTH	UNIT WIDTH	UNIT HEIGHT
40'	12'	10'

UNIT SPEC: ICD 705
UNIT TYPE: ARC VAULT
CUSTOMER: ADS
LOCATION: LONG BEACH, CA
SERIAL #: 12742-01
QUOTE #: 44310BR3.2

ARMAG® CORPORATION
Manufacturers of Arms Vaults and Explosive Storage magazines since 1969
300 ARMAG AVE. • BARDSTOWN, KY 40004 • PHONE: (800) 443-9994 • FAX: (502) 348-4801 • EMAIL: info@armagcorp.com

DESCRIPTION: 60dB SHIELDED ARC VAULT WITH NETWORK CABINETS AND FIBER OPTIC PACKAGE

LINING: STC 50

EXT. FINISH: "DESERT TAN" - ZINC PRIMER / DEVTHANE 349QC

DRAWN BY	JMS
DATE DRAWN	08/06/2025
APPROVED BY	-
SHEET SIZE	B
SCALE	####
SHEET	8 OF 11
REVISION	A
APPROX. SHIPPING WT. IN LBS	64,000
DRAWING NO.	S4407

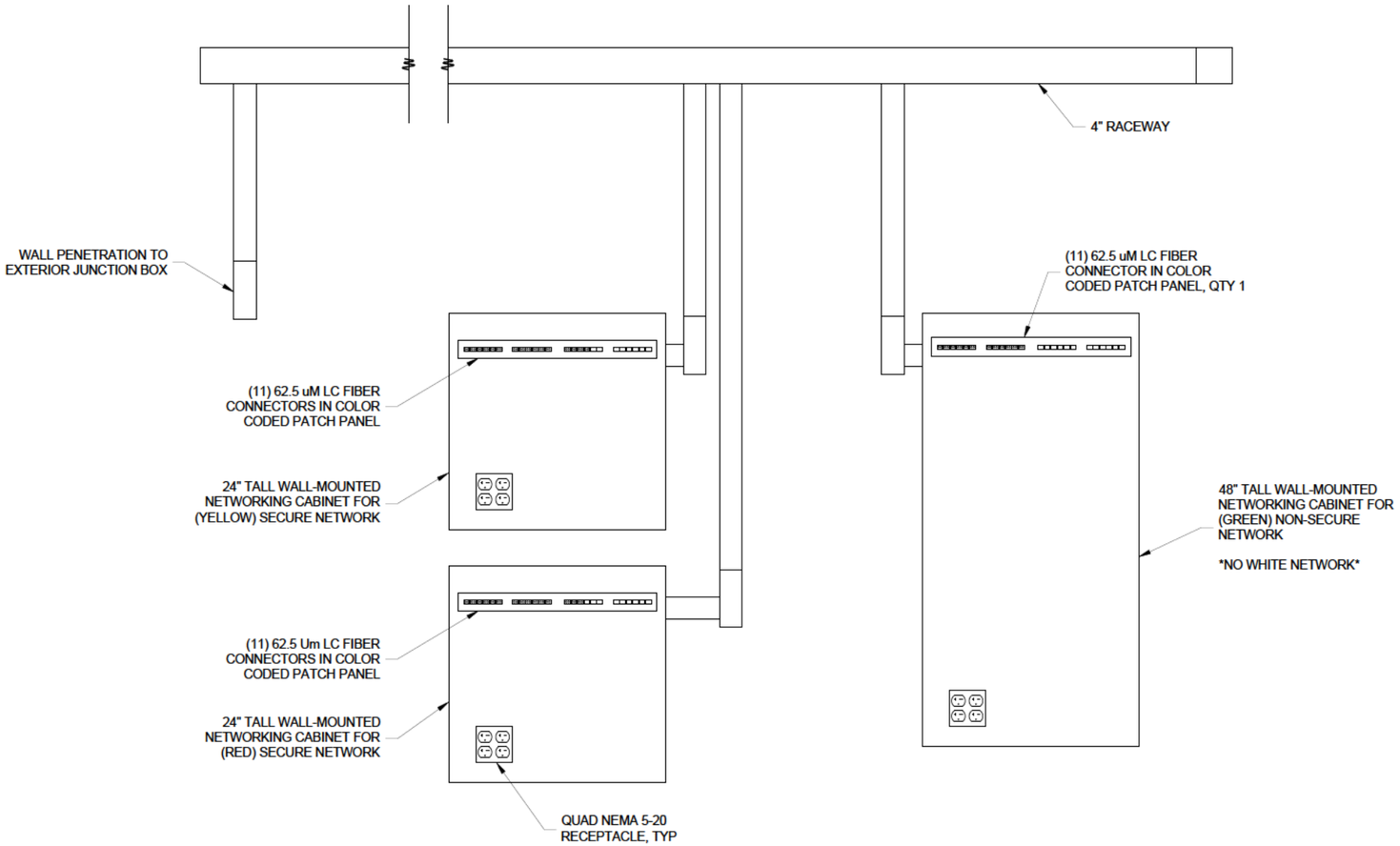

NETWORK CABINET DETAIL

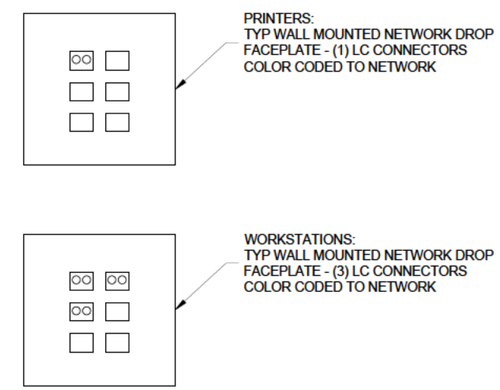

NETWORK DROP DETAIL

LEGEND:

- K KILL SWITCH
- D DURESS
- ELECTRIC RECEPTACLE
- DS DOUBLE STACKED
- SS SINGLE STACKED
- EMG EMERGENCY LIGHT
- TJ TELEPHONE JACK
- LAN LAN CONNECTION
- SE SEISMIC SENSOR
- SM SMOKE DETECTION
- PIR PIR
- BT BULLET TRAP

LEGEND CONTINUED:

- T THERMOSTAT
- GROUND

UNLESS OTHERWISE NOTED, TOLERANCES ARE:
FRACTIONS: ±1/16 ANGLES: ±1°
MACHINED SURFACES: 125 MICRO-INCHES
THESE TOLERANCES DO NOT APPLY TO BASIC DIMS.
DRAWN TO SCALE UNLESS OTHERWISE NOTED

THIS DRAWING IS THE PROPERTY OF ARMAG CORPORATION WHO CLAIMS PROPRIETARY RIGHTS IN THE MATERIAL DISCLOSED. IT IS ISSUED IN CONFIDENCE FOR ENGINEERING INFORMATION ONLY AND MAY NOT BE COPIED OR USED FOR MANUFACTURE OF ANYTHING SHOWN WITHOUT SPECIFIC PERMISSION FROM ARMAG CORPORATION

UNIT LENGTH	UNIT WIDTH	UNIT HEIGHT
40'	12'	10'

UNIT SPEC: ICD 705
UNIT TYPE: ARC VAULT
CUSTOMER: ADS
LOCATION: LONG BEACH, CA
SERIAL #: 12742-01
QUOTE #: 44310BR3.2

ARMAG® CORPORATION
Manufacturers of Arms Vaults and Explosive Storage magazines since 1969
300 ARMAG AVE. • BARDSTOWN, KY 40004 • PHONE: (800) 443-9994 • FAX: (502) 348-4801 • EMAIL: info@armagcorp.com

DESCRIPTION: 60dB SHIELDED ARC VAULT WITH NETWORK CABINETS AND FIBER OPTIC PACKAGE

LINING: STC 50
EXT. FINISH: "DESERT TAN" - ZINC PRIMER / DEVTHANE 349QC

DRAWN BY	REVISION
JMS	A
DATE DRAWN: 08/06/2025	
APPROVED BY: -	APPROX. SHIPPING WT. IN LBS: 64,000
SHEET SIZE: B	
SCALE: ####	DRAWING NO.: S4407
SHEET: 9 OF 11	

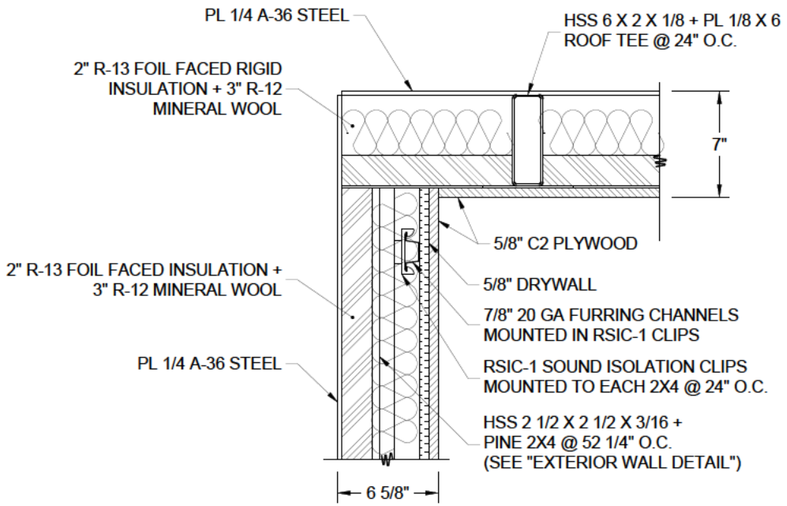

EXTERIOR WALL / ROOF CONSTRUCTION

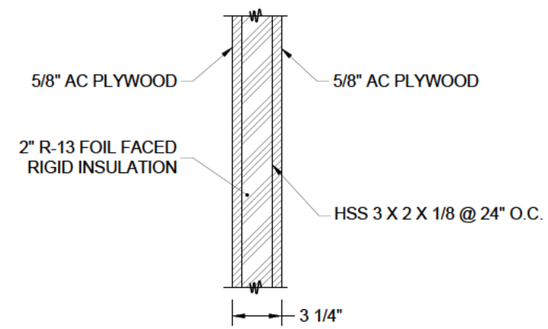

STANDARD INTERIOR WALL CONSTRUCTION

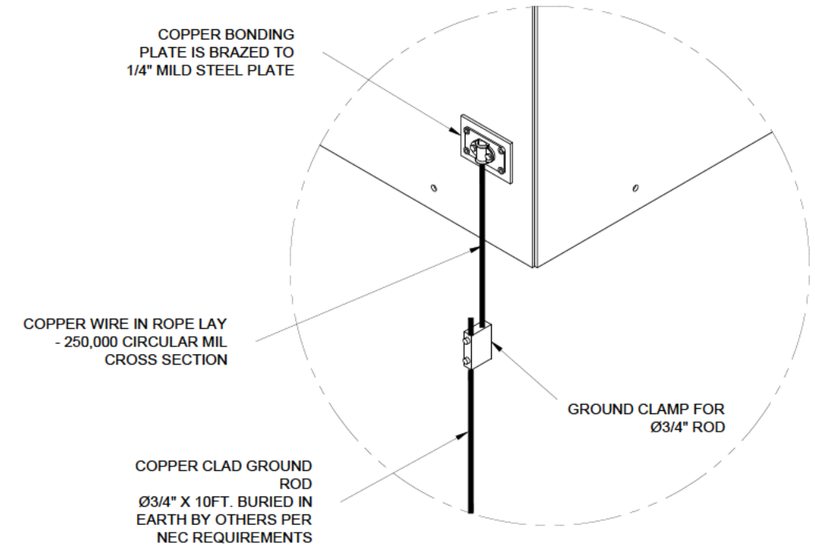

TYPICAL GROUNDING KIT

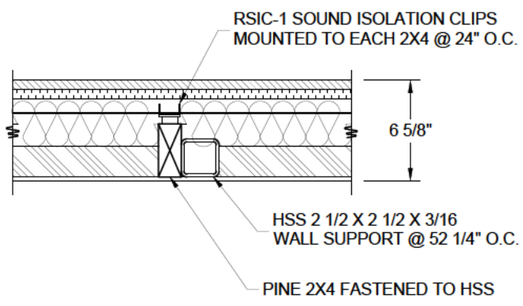

EXTERIOR WALL DETAIL

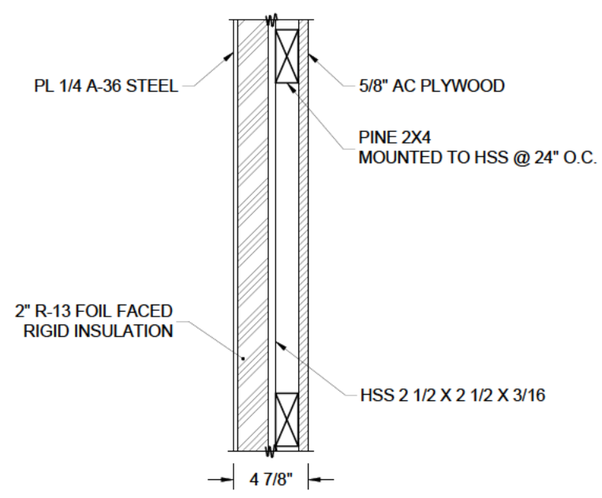

STANDARD EXTERIOR VESTIBULE
WALL CONSTRUCTION

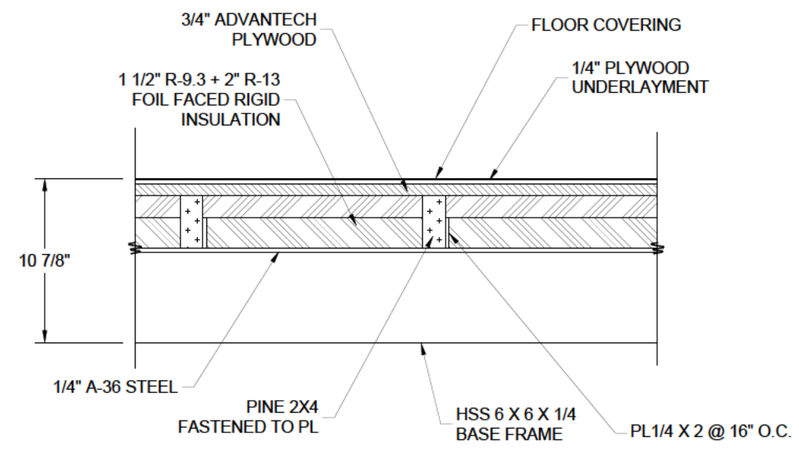

STANDARD FLOOR CONSTRUCTION

LEGEND:

- KILL SWITCH
- DURESS
- ELECTRIC RECEPTACLE
- DS DOUBLE STACKED
- SS SINGLE STACKED
- EMR EMERGENCY LIGHT
- TJ TELEPHONE JACK
- LJ LAN CONNECTION
- SE SEISMIC SENSOR
- SM SMOKE DETECTION
- PIR PIR
- BT BULLET TRAP

LEGEND CONTINUED:

- T THERMOSTAT
- GROUND

UNLESS OTHERWISE NOTED, TOLERANCES ARE:
FRACTIONS: ±1/16 ANGLES: ±1°
MACHINED SURFACES: 125 MICRO-INCHES
THESE TOLERANCES DO NOT APPLY TO BASIC DIMS.
DRAWN TO SCALE UNLESS OTHERWISE NOTED

THIS DRAWING IS THE PROPERTY OF ARMAG CORPORATION WHO CLAIMS PROPRIETARY RIGHTS IN THE MATERIAL DISCLOSED. IT IS ISSUED IN CONFIDENCE FOR ENGINEERING INFORMATION ONLY AND MAY NOT BE COPIED OR USED FOR MANUFACTURE OF ANYTHING SHOWN WITHOUT SPECIFIC PERMISSION FROM ARMAG CORPORATION

UNIT LENGTH	UNIT WIDTH	UNIT HEIGHT
40'	12'	10'

UNIT SPEC: ICD 705
UNIT TYPE: ARC VAULT
CUSTOMER: ADS
LOCATION: LONG BEACH, CA
SERIAL #: 12742-01
QUOTE #: 44310BR3.2

ARMAG® CORPORATION
Manufacturers of Arms Vaults and Explosive Storage magazines since 1969
300 ARMAG AVE. • BARDSTOWN, KY 40004 • PHONE: (800) 443-9994 • FAX: (502) 348-4801 • EMAIL: info@armagcorp.com

DESCRIPTION: 60dB SHIELDED ARC VAULT WITH NETWORK CABINETS AND FIBER OPTIC PACKAGE

LINING: STC 50
EXT. FINISH: "DESERT TAN" - ZINC PRIMER / DEVTHANE 349QC

DRAWN BY	REVISION
JMS	A
DATE DRAWN: 08/06/2025	
APPROVED BY: -	APPROX. SHIPPING WT. IN LBS: 64,000
SHEET SIZE: B	
SCALE: ####	DRAWING NO.: S4407
SHEET: 10 OF 11	

EXTERIOR MAIN PANEL SCHEDULE - 120/208V 3Ø SURFACE MOUNT W/ 100A MAIN BREAKER - NEMA 3R

BRK.	VOLTS	AMPS / POLES	DESCRIPTION	LOAD (VA) A	LOAD (VA) B	LOAD (VA) C	DESCRIPTION	AMPS / POLES	VOLTS	BRK.
1			MAIN	- / 4200			HVAC	35/3	208	2
3					- / 4200					4
5						- / 4200				6
7	120	20/1	VESTIBULE	360 / 4600			INTERIOR POWER	60/3	208	8
9	120	20/1	THERMOSTAT J-BOX		100 / 3860					10
11	120	20/1	SPARE			- / 4760				12
13	120	20/1	SPARE	- / -			SPARE	20/1	120	14
15	120	20/1	SPARE		- / -		SPARE	20/1	120	16
17	120	20/1	SPARE			- / -	SPARE	20/1	120	18
CONNECTED LOAD PER PHASE				9160	8160	8960				
TOTAL CONNECTED LOAD (KVA)				26.28						

INTERIOR SUB PANEL SCHEDULE - 120/208V 3Ø 60A MAIN LUG ONLY SURFACE MOUNT - NEMA 1

BRK.	VOLTS	AMPS / POLES	DESCRIPTION	LOAD (VA) A	LOAD (VA) B	LOAD (VA) C	DESCRIPTION	AMPS / POLES	VOLTS	BRK.
1	120	20/1	NETWORK CABINET #1	1000 / 1000			NETWORK CABINET #2	20/1	120	2
3	120	20/1	NETWORK CABINET #3		1000 / 400		LIGHTING	20/1	120	4
5	120	20/1	RECEPTACLES #1-3			1200 / 1200	RECEPTACLES #4-6	20/1	120	6
7	120	20/1	RECEPTACLES #7-8	800 / 800			RECEPTACLES #9-10	20/1	120	8
9	120	20/1	IDS / ACS / THERMOSTAT		460 / 2000		L5-30 RECEPTACLE #1	30/1	120	10
11	120	30/1	L5-30 RECEPTACLE #2			2000 / 360	CCTV RECEPTACLE	20/1	120	12
13	120	20/1	PRINTER / SHREDDER	1000 / -			SPARE	20/1	120	14
15	120	20/1	SPARE				SPARE	20/1	120	16
17	120	20/1	SPARE				SPARE	20/1	120	18
19	120	20/1	SPARE				SPARE	20/1	120	20
21	120	20/1	SPARE				SPARE	20/1	120	22
23	120	20/1	SPARE				SPARE	20/1	120	24
CONNECTED LOAD PER PHASE				4600	3860	4760				
TOTAL CONNECTED LOAD (KVA)				13.22						

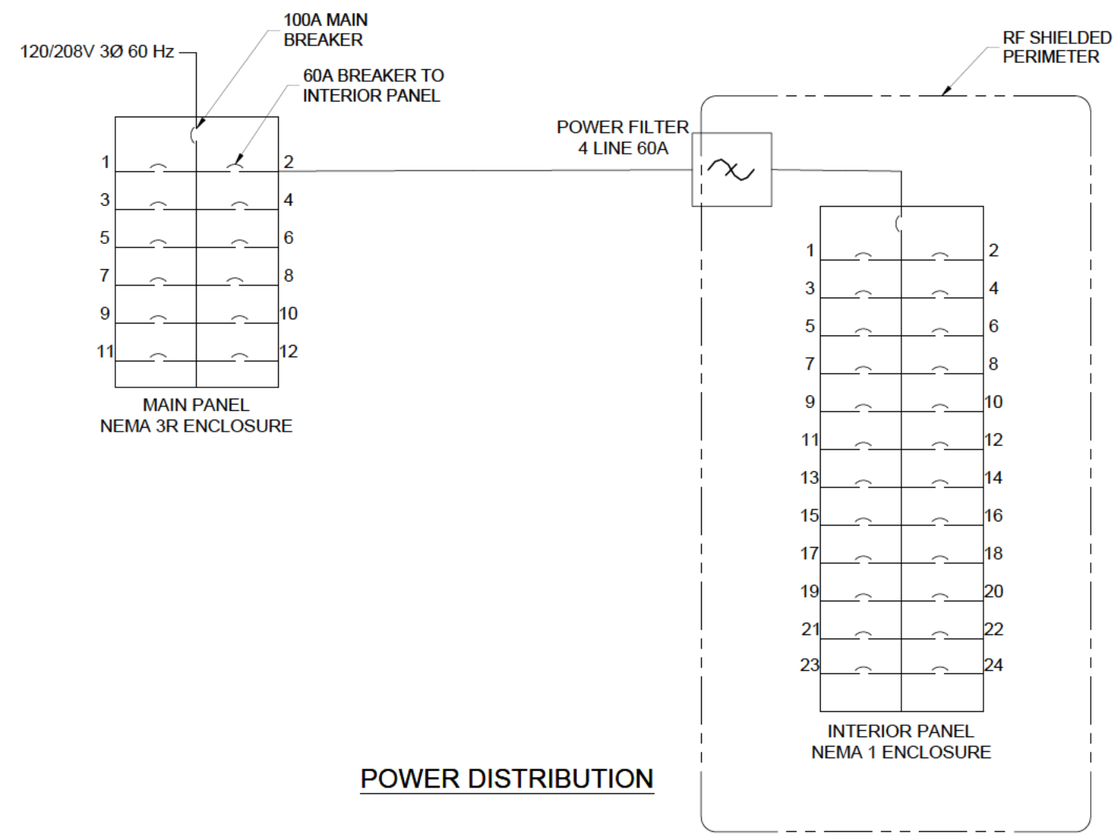

POWER DISTRIBUTION

LEGEND:
- KILL SWITCH
- DURESS
- ELECTRIC RECEPTACLE
- DS DOUBLE STACKED
- SS SINGLE STACKED
- EMR EMERGENCY LIGHT
- TJ TELEPHONE JACK
- LAN CONNECTION
- SE SEISMIC SENSOR
- SM SMOKE DETECTION
- PIR PIR
- BT BULLET TRAP

LEGEND CONTINUED:
- T THERMOSTAT
- GROUND

UNLESS OTHERWISE NOTED, TOLERANCES ARE: FRACTIONS: ±1/16 ANGLES: ±1° MACHINED SURFACES: 125 MICRO-INCHES THESE TOLERANCES DO NOT APPLY TO BASIC DIMS. DRAWN TO SCALE UNLESS OTHERWISE NOTED

THIS DRAWING IS THE PROPERTY OF ARMAG CORPORATION WHO CLAIMS PROPRIETARY RIGHTS IN THE MATERIAL DISCLOSED. IT IS ISSUED IN CONFIDENCE FOR ENGINEERING INFORMATION ONLY AND MAY NOT BE COPIED OR USED FOR MANUFACTURE OF ANYTHING SHOWN WITHOUT SPECIFIC PERMISSION FROM ARMAG CORPORATION

UNIT LENGTH	UNIT WIDTH	UNIT HEIGHT
40'	12'	10'

UNIT SPEC: ICD 705
UNIT TYPE: ARC VAULT
CUSTOMER: ADS
LOCATION: LONG BEACH, CA
SERIAL #: 12742-01
QUOTE #: 44310BR3.2

ARMAG® CORPORATION
Manufacturers of Arms Vaults and Explosive Storage magazines since 1969
300 ARMAG AVE. • BARDSTOWN, KY 40004 • PHONE: (800) 443-9994 • FAX: (502) 348-4801 • EMAIL: info@armagcorp.com

DESCRIPTION: 60dB SHIELDED ARC VAULT WITH NETWORK CABINETS AND FIBER OPTIC PACKAGE

LINING: STC 50
EXT. FINISH: "DESERT TAN" - ZINC PRIMER / DEVTHANE 349QC

DRAWN BY	REVISION
JMS	A
DATE DRAWN: 08/06/2025	
APPROVED BY: -	APPROX. SHIPPING WT. IN LBS: 64,000
SHEET SIZE: B	
SCALE: ####	DRAWING NO. S4407
SHEET: 11 OF 11	

RLH Industries, Inc.
Model Name: SDD-03-2
S/N:
Description: Serial Data RS-232 & RS-485/422 Fiber Converter, Multimode SC 2km/1.2 mi., Dual Fiber
Power Input: 24-48 VDC
Power Rating: 3.6 Watts Max

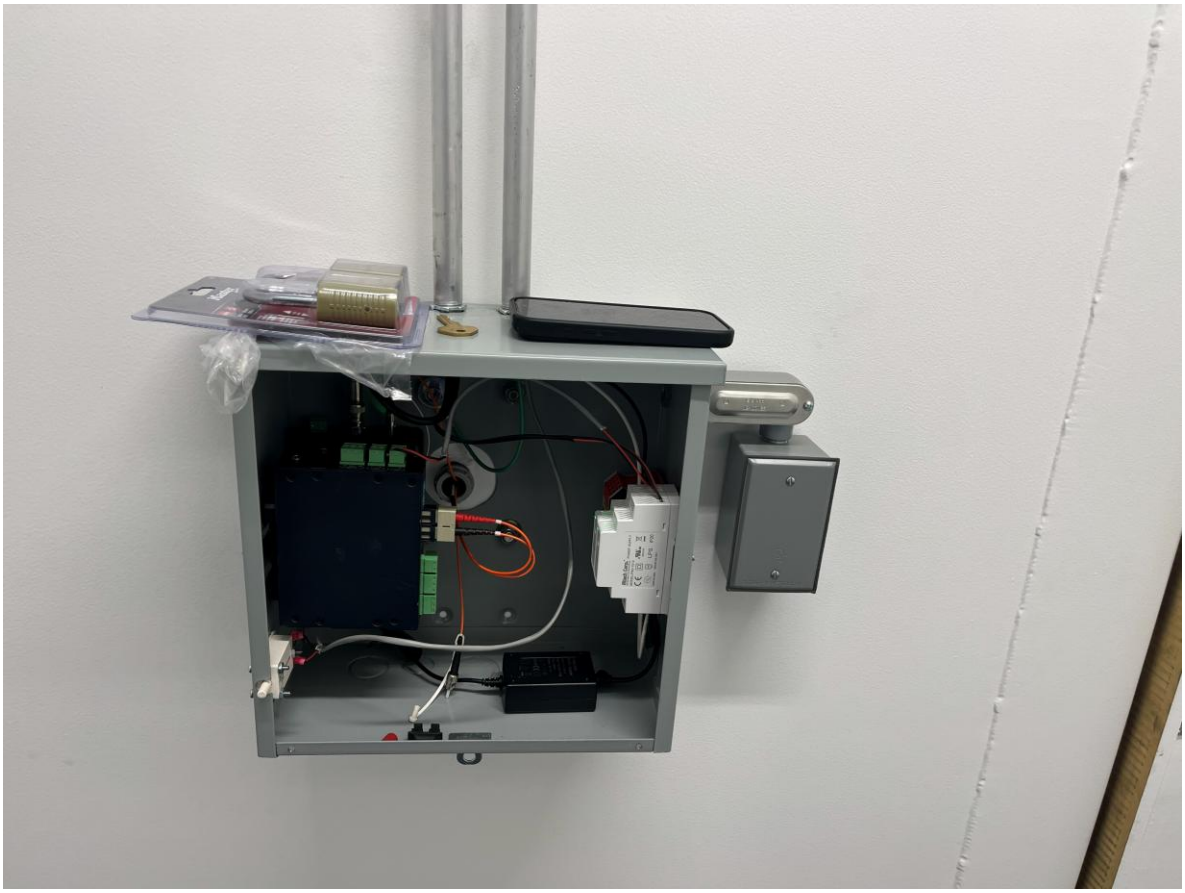

SECURITY
SECO-LARM®
TYPE-S
M-13
LISTED

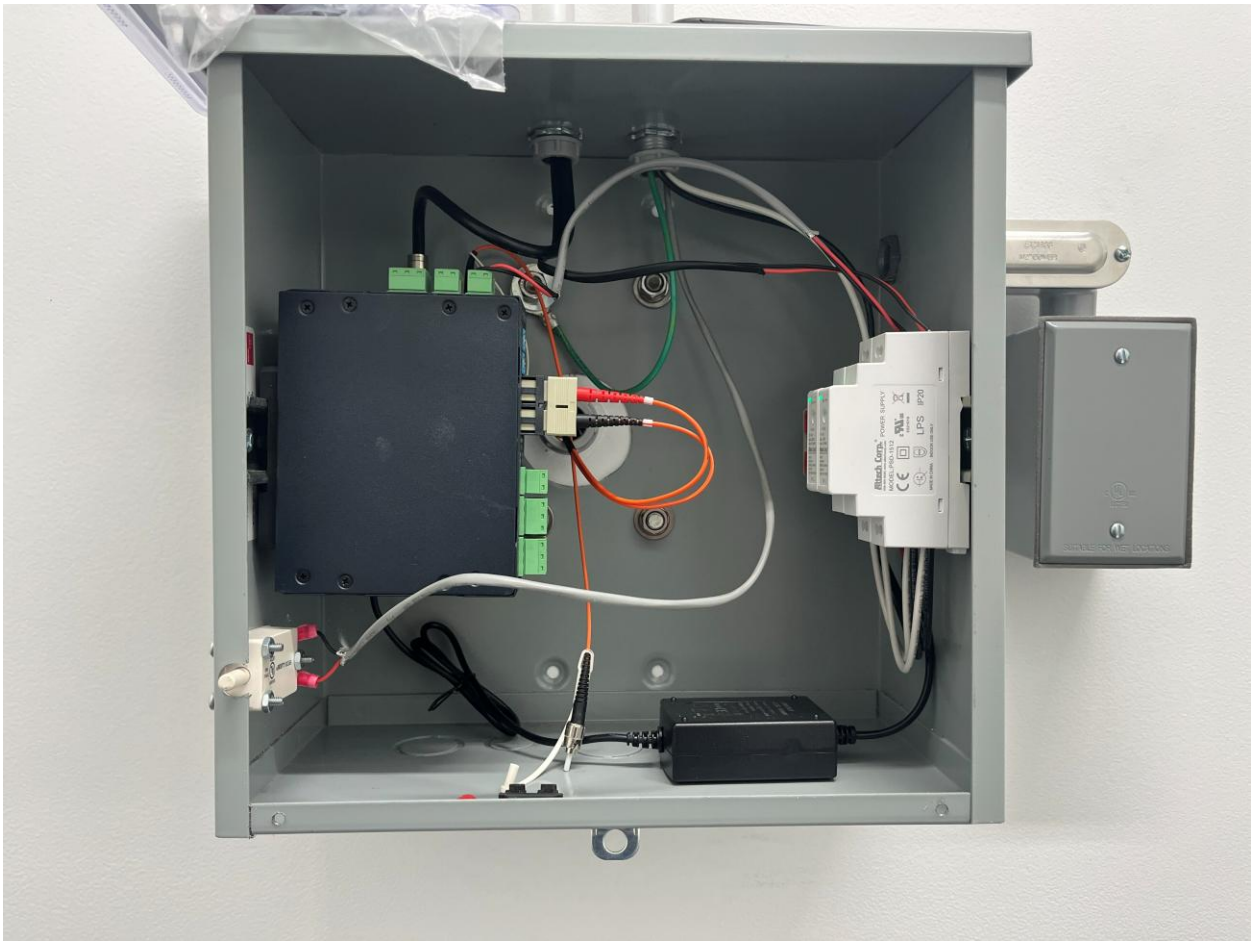
Altech Corp.
POWER SUPPLY
MODEL:PBA-2312
LPS
IP20
AC POWER
SINGLE POINT LOCKOUT

INSTRUCTIONS
SENTINEL

EXIT

SRG

GSA
APPROVED
FF-L-2890C
Type I & II
LOCKNETIC
LKM10KHKM
SERIES
SRG

Enclosure 2
DHS Mega Center Requirements Document

Department of Homeland Security
National Protections and Programs Directorate
Federal Protective Service
MegaCenter Alarm Requirements (MAR)

DATE OF SUBMISSION:

Thank you for selecting the Federal Protective Service (FPS) as your alarm monitoring service provider. FPS maintains four (4) Multi-Regional Emergency Management Control Centers (MegaCenters) across the country. The MegaCenters handle alarm monitoring and radio dispatch of FPS Law Enforcement Officers and Contract Protective Security Officers (PSO) for alarm response, criminal activities and emergencies for General Services Administration (GSA) federally owned properties and leased space. Additionally, the MegaCenters notify local authorities; including law enforcement, emergency medical services and/or fire departments, as designated by customer protocols.

Before system installation is complete, the installer and customer must complete the attached application and submit it to the MegaCenter to initiate account setup. **See page 2 for approved equipment and installation requirements**. All paperwork and any changes made during the course of the installation must be emailed by the customer. Make sure to complete every item on the attached application to ensure proper setup of your alarm account. Contact the Technical Services Desk (TSD) if you need additional assistance in completing any part of the application or for an updated version of the MAR application. **Failure to complete all sections accurately will cause delays in setup**.

After the MAR application has been completed the customer must email the completed MAR application to their respective Megacenter. The MegaCenter will review the application and respond via email to confirm receipt or request missing information. Once the complete application is confirmed by the MegaCenter, please allow up to 48 hours, or 2 full business days, for the account creation process.

MEGACENTER INFORMATION: This list provides contact information and geographical responsibilities for each MegaCenter. If a customer or installer requires assistance, contact the MegaCenter based on the geographic location of the installation.

MegaCenter	Philadelphia	Battle Creek	Denver	Suitland
REGIONAL COVERAGE AREAS:	1, 2, 3	4, 5, 6	7, 8, 9, 10	11
GEOGRAPHICAL COVERAGE AREAS: (State Codes)	CT, DE, MA, MD, ME, NH, NJ, NY, PA, Puerto Rico, RI, VA, Virgin Islands, VT, WV	AL, FL, GA, IA, IL, IN, KS, KY, MI, MN, MO, MS, NC, NE, OH, SC, TN, WI	AK, AR, AZ, CA, CO, Guam, HI, ID, LA, MT, ND, NM, NV, OK, OR, Saipan, Samoa, SD, TX, UT, WA, WY	MD (Metropolitan area), VA (Metropolitan area), Washington, DC
ALARM SERVICES DESK PHONE NUMBER:	**1-877-526-5578**	**1-866-312-4004**	**1-888-511-5062**	**1-301-763-9523**
ALARM SERVICES DESK EMAIL ADDRESS:	pmc.alarms@fps.dhs.gov	battlecreek.helpdesk@fps.dhs.gov	denver.helpdesk@fps.dhs.gov	smc.alarmservices@fps.dhs.gov
FAX NUMBER:	1-215-521-2099	1-269-565-9545	1-303-236-2151	1-301-763-0125
EMERGENCY NUMBER:	1-877-4FPS-411 (1-877-437-7411)			

PROPERTY OF THE UNITED STATES GOVERNMENT - FOR OFFICIAL USE ONLY
Do not remove this notice - Properly destroy documents when no longer needed.

NOTE THE FOLLOWING REQUIREMENTS - PLEASE READ THE ENTIRE PAGE

The cost of MegaCenter monitoring and emergency services are factored into the GSA lease agreement. Any location that does not have a GSA building number will be required to provide a Security Work Authorization (SWA) number to the MegaCenter for monitoring reimbursement. All fire, internet, and environmental monitoring will require an SWA number for creating and monitoring the account. Contact the SWA coordinator for information and forms at 269-565-9655 or swa.megacenter@fps.dhs.gov.

There are many alarm panel manufacturers. Monitoring support of every brand of alarm panel is not financially viable. Therefore, FPS monitors a standardized list of panels that must be adhered to by all our monitored clients. Without endorsement of any specific manufacturer, the MegaCenter is capable of monitoring UL commercially grade listed panels from the following manufacturers: Honeywell/Ademco, Bosch/Radionics, or Digital Monitoring Products (DMP). For internet monitored accounts, we are equipped to monitor Bosch/Radionics panels. All alarm systems must have a zone assigned to the alarm system Panel Tamper. **Proprietary panels cannot be monitored or supported.** All Fire communicators must be UL Listed, inspected by the Local AHJ (Authority Having Jurisdiction,) and follow all NFPA 72 standards.

The customer will verify if a permit number is required for alarm dispatch with their local municipality.

The Installer shall completely install the security system. The liability for installation and complete testing is the sole responsibility of the installer including verification of proper reporting of all zones into the MegaCenter. The MegaCenter will provide support for troubleshooting but this does not reduce any of the Installer responsibilities. The Installer should have working knowledge of the alarm system being installed. The Technical Service Desk (TSD) can provide some assistance. The installer shall contact the MegaCenter Alarm Services Desk for system programming. Once installation has been completed, notify the MegaCenter that the panel is ready to be programmed. Local keypad programming will be locked out and all future programming issues will be handled through the MegaCenter. **If installation issues arise, the Installer shall contact the equipment manufacturer's Technical Support for the system being installed**.

The panel phone line should be on a dedicated phone line but if that line is unavailable, an analog POTs (Plain Old Telephone) line that is wired for proper line seizure with an RJ31X can be used. Caller ID information must not be blocked for phone line verification. Digital phone lines such as fiber, VoIP (Voice over Internet Protocol,) or analog converters will not allow for transmission of analog alarm signals. FAX machines, answering machines, and other types of office automation devices may interrupt signal transmission and result in the signals not being properly sent to the MegaCenter. **Most alarm manufacturers recommend that you use a dedicated phone line.**

When setting up internet accounts it is the responsibility of the customer to ensure the firewall routing through to the Megacenter is completed. The Installer may be required to enter the IP address of the system into the internet communicator to allow initial connection to the alarm system. Packet transmission should be verified on both ends before the account is scheduled. If the internet account is due to be a SCIF the Megacenter can download the system and work with the installer for testing. Once account testing has been completed the account must be locked out by the on-site technician before the account is placed on-line. For all internet accounts it is strongly recommended the system have a telephone line for initial set up and a telephone or cellular as backup to ensure continuity of service.

When the alarm system is completely installed and programmed to the MegaCenter's specifications, the installer must perform a 100% test of the alarm system. This test is to include all zones connected to the security system and monitored by the MegaCenter. After the testing is performed, the installer must contact the MegaCenter to confirm all signals have been received. Once the MegaCenter confirms the zone testing is complete, the user codes will be added to programming.

The MegaCenter can issue a Signal History report indicating all zones have been tested successfully if needed for an acceptance inspection requirement. Once all the information has been processed, the MegaCenter will provide an account number for the project. The account will be disabled during set up and testing and will be placed online when all of the required information and testing has been completed and the customer has requested activation via email or unless otherwise specified by the customer.

CONTENTS

	To Be Completed By Customer:	To Be Completed By Installer:	Page
SUBSCRIBER INFORMATION: Information about the customer agency subscribing to alarm monitoring and/or installation services.	X		4
FPS CONTACT: Contact information for the FPS representative responsible for this project.	X		4
AUTHORIZED ACCOUNT CONTACTS: List of contacts authorized to perform specific functions regarding the alarm account.	X		4
SYSTEM TEST AND ACTIVATION: Scheduled date and time for final testing of the alarm system.	X		4
EMERGENCY CONTACT INFORMATION: Information about business and afterhours contacts.	X		5
USER INFORMATION: List of users authorized to obtain access to the alarmed areas.	X		6
INSTALLER INFORMATION: Information about the company that is performing, or has performed, the alarm system installation.		X	7
ALARM SYSTEM INFORMATION: Information about the alarm system configurations.		X	7
FLOOR PLAN INSTRUCTIONS: Instructions regarding the floor plans required for submission.		X	7
AREA / PARTITION INFORMATION: Information about the alarm system Areas / Partitions.		X	8
KEYPAD INFORMATION: Information about all keypads attached to the alarm system.		X	8
RELAY INFORMATION: Continued list of zones/devices and list of alarm system Relays.		X	8
ZONE / DEVICE INFORMATION: List of zones/devices included in the alarm system. Includes device inventory.		X	9-10
OTHER DEVICE INFORMATION: List any and all other devices connected to the alarm system.		X	11
POINT SOURCE REFERENCE PAGE: A reference page that provides additional information and explanation about Point Sources for the zones connected to the alarm system.		X	12

FPS ACCOUNT NUMBER:

SUBSCRIBER INFORMATION

INSTRUCTIONS: Provide information pertaining to the customer of the alarm account.

AGENCY NAME:			**AGENCY ADDRESS:**	
GSA BUILDING NUMBER (If applicable):			**BUILDING NAME:**	
BUILDING ADDRESS (Include street address, city, state and zip):			**SUITE/ROOM:**	**FLOOR:**
BUILDING MANAGER / PROPERTY MANAGER:	**OFFICE PHONE:**	**CELL PHONE:**	**FAX:**	**EMAIL ADDRESS:**
ACCOUNT PASSWORD:	The account password is used to verify a customer's legitimacy to be on the premises when the MegaCenter calls in response to alarm activations. **The FPS account number and password will be required when requesting alarm/account information or to place your account in an offline status.** As a security measure, we recommended you change your account password on a regular basis.			

FPS CONTACT

FPS INSPECTOR OR SECURITY SPECIALIST: Provide contact information for the Inspector or Specialist assigned to this project.

NAME (PRIMARY):	**OFFICE PHONE:**	**CELL PHONE:**	**FAX:**	**EMAIL ADDRESS:**

AUTHORIZED ACCOUNT CONTACTS

AUTHORIZED ACCOUNT CONTACTS: Personnel with full authority to make changes and requests reports for this alarm account.

NAME (PRIMARY):	**OFFICE PHONE:**	**CELL PHONE:**	**FAX:**	**EMAIL ADDRESS:**
NAME (ALTERNATE):	**OFFICE PHONE:**	**CELL PHONE:**	**FAX:**	**EMAIL ADDRESS:**
NAME (ALTERNATE):	**OFFICE PHONE:**	**CELL PHONE:**	**FAX:**	**EMAIL ADDRESS:**
NAME (ALTERNATE):	**OFFICE PHONE:**	**CELL PHONE:**	**FAX:**	**EMAIL ADDRESS:**

SYSTEM TEST AND ACTIVATION

Instructions: Provide a requested date and time for testing. The system will not go online until a complete and thorough test has been completed. The test should be coordinated with the installer on-site and the MegaCenter. Upon completion of processing the MAR document, the MegaCenter will contact the submitter and establish a date and time that works best for all parties involved. The requested date and time may not be accommodated due to previously scheduled accounts.

Testing: After the application has been submitted, we ask two (2) business days to process the new account. When two (2) business days have elapsed after the submission of the MAR, contact the MegaCenter via phone or email to setup a date and time when the technician will be on site to establish communication and run through a full test of the system.

Activation: When communication has been established, testing has been completed, and the account is ready to come online for monitoring, contact the MegaCenter via email or fax with authorization to bring the account online.

REQUESTED TEST DATE:	**REQUESTED TEST TIME:**

Emergency Notification List (ENL) Information

The call-lists, shown below, determine when the MegaCenter will contact the site; **DURING** normal business hours (*Day*), and when to contact the designated individuals **AFTER** normal business hours (*Evening*) for alarm activations.

During Business Hours Alarm Activations:

Business Hours:	☐**AM** ☐**PM**	**TO**		☐ **AM** ☐**PM**
Work Days: ☐ Sunday ☐ Monday ☐ Tuesday ☐ Wednesday ☐ Thursday ☐ Friday ☐ Saturday				
Time Zone: ☐ EST ☐ CST ☐ MST ☐ PST				

If the alarm system sends a signal during business hours as described above, please outline the order in which phone numbers should be called.

☐ DO NOT DISPATCH AUTHORITIES DURING BUSINESS HOURS UNLESS SOMEONE FROM CALL LIST IS CONTACTED FIRST EXCEPT FOR DURESS/PANIC.

** Each phone number must be a unique number. Do not duplicate phone numbers. **

Call Order	**Contact Person**	**Business Hours Telephone Numbers**	**Ext.**
1			
2			
3			
4			
5			
6			
7			
8			
9			
	Local Police 24-Hour Dispatch (NOT 911)		
X		**Authorized Only for Changes and Requests**	

☐ ***<u>**Dispatch FPS, if Available During or After Hours, Prior to Local Police Dispatch**</u>***

****** LOCAL POLICE MUST BE ON THE AFTER HOURS CALL LIST ******

Local Police 24-Hour Dispatch **(NOT 911)** Telephone Number:		Called – <u>First</u> ☐ <u>Last</u> ☐

**At least one (1) Keyholder contact must be listed with a Home, Cell or Other number After Hours. **

Call Order	**Contact Person**	**After Hour Numbers**	**Home - Cell - Other**
1			☐ ☐ ☐
2			☐ ☐ ☐
3			☐ ☐ ☐
4			☐ ☐ ☐
5			☐ ☐ ☐
6			☐ ☐ ☐
7			☐ ☐ ☐
8			☐ ☐ ☐
9			☐ ☐ ☐

USER PASSCODES

FORM INSTRUCTIONS

This form is used for the purpose of adding passcodes that will be used to arm and disarm the intrusion detection system. It is recommended that each authorized person have their own unique code. This will allow tracking of who arms and disarms the system. The chart to the right indicates which features are available to each authority level with 4 being the lowest and 1 being the highest.

PASSCODE LENGTHS

Bosch	4 to 6 digits
Ademco/Honeywell	4 digits only
DMP	4 to 12 digits (depending on model)

	Authority Levels	1	2	3	4	5
Function	Arm	■	■	■	■	■
	Disarm	■	■	■	■	
	Bypass Points	■	■	■		
	Un-bypass Points	■	■	■		
	Force Arm	■	■	■		
	Diagnostic Functions	■	■			
	Add Users	■				
	Delete Users	■				
	Change Users	■				

USER CODE:	USER NAME:	AUTHORITY LEVEL:	AREAS ASSIGNED:
		1	1☐2☐3☐4☐5☐6☐7☐8☐
		1	1☐2☐3☐4☐5☐6☐7☐8☐
		4	1☐2☐3☐4☐5☐6☐7☐8☐
			1☐2☐3☐4☐5☐6☐7☐8☐
			1☐2☐3☐4☐5☐6☐7☐8☐
			1☐2☐3☐4☐5☐6☐7☐8☐
			1☐2☐3☐4☐5☐6☐7☐8☐
			1☐2☐3☐4☐5☐6☐7☐8☐
			1☐2☐3☐4☐5☐6☐7☐8☐
			1☐2☐3☐4☐5☐6☐7☐8☐
			1☐2☐3☐4☐5☐6☐7☐8☐
			1☐2☐3☐4☐5☐6☐7☐8☐
			1☐2☐3☐4☐5☐6☐7☐8☐
			1☐2☐3☐4☐5☐6☐7☐8☐
			1☐2☐3☐4☐5☐6☐7☐8☐
			1☐2☐3☐4☐5☐6☐7☐8☐
			1☐2☐3☐4☐5☐6☐7☐8☐
			1☐2☐3☐4☐5☐6☐7☐8☐
			1☐2☐3☐4☐5☐6☐7☐8☐
			1☐2☐3☐4☐5☐6☐7☐8☐
			1☐2☐3☐4☐5☐6☐7☐8☐
			1☐2☐3☐4☐5☐6☐7☐8☐
			1☐2☐3☐4☐5☐6☐7☐8☐

PROPERTY OF THE UNITED STATES GOVERNMENT - FOR OFFICIAL USE ONLY
Do not remove this notice - Properly destroy documents when no longer needed.

INSTALLER INFORMATION

INSTRUCTIONS: Provide information pertaining to the company providing installation services of the alarm system.

COMPANY NAME:		**STREET ADDRESS:**	**CITY:**
STATE:	**ZIP CODE:**	**OFFICE PHONE:**	**OFFICE FAX:**
SERVICE MANAGER:		**SERVICE MANAGER PHONE:**	**SERVICE MANAGER EMAIL:**
TECHNICIAN:		**TECHNICIAN PHONE:**	

ALARM SYSTEM INFORMATION

ALARM SYSTEM STATUS: (Check One)	☐	**NEW**	☐	**UPGRADE**	☐	**RELOCATION**	***Admin. Update**
ALARM SYSTEM TYPE: (Check All That Apply)	☐	**BURGLARY**	☐	**DURESS**	☐	**ENVIRONMENTAL**	☐ **FIRE**
ALARM PANEL TYPE: (Write Model Number)	☐	**ADEMCO**	☐	**BOSCH**	☐	**DMP**	**FIRE PANEL TYPE**

PANEL PHONE NUMBER:	**Does system need a 9 to dial out?**	**Phone Company:**	**LOCATION OF PANEL AND TRANSFORMER:** See attachments

NOTE: Phone line connections must be dedicated or RJ31X connections with proper line seizure and programming to enable the MegaCenters to connect remotely at any time.

NETWORK INTERFACE TYPE:	**DNS SERVER ADDRESS:**
EXTERNAL DEVICE IP ADDRESS (MUST BE STATIC):	**MAC ADDRESS:**
DEFAULT GATEWAY	**SUBNET MASK**

Internet Monitoring: The customer MUST provide a static IP address for the control panel. The customer also needs to open port 7700 (Bosch), or 2001 (DMP) bi-directionally on their firewall and forward the port on their firewall to the alarm panel.

NOTE: It is the responsibility of the customers IT staff to make sure all routers and ports are configured properly. Also, it is highly recommended that a telephone line or cellular unit be connected to the panel as a means of secondary communication

FLOOR PLAN INSTRUCTIONS

INSTRUCTIONS: Provide a clean reproducible copy of building or office area floor plan(s), showing all devices, zones and point IDs. These plans will be scanned into our alarm automation software to assist the responding agency with locating the exact area of the alarm. If possible, we would prefer the above requested drawings or plans in automated format. AutoCAD files are preferred but PCX, .BMP or .JPG formats are acceptable. **SEE SAMPLE DRAWING.**

AREA / PARTITION INFORMATION

INSTRUCTIONS: List information regarding other partitioned areas. Include Account No. (If known) for each area along with the location. Every partitioned area needs to have at least one keypad.

AREA	ACCOUNT	KEYPAD(S) ASSIGNED	DESCRIPTION OF AREA (Include Location)
1			
2			
3			
4			
5			
6			
7			
8			
9			
10			

PROPERTY OF THE UNITED STATES GOVERNMENT - FOR OFFICIAL USE ONLY
Do not remove this notice - Properly destroy documents when no longer needed.

KEYPAD INFORMATION

INSTRUCTIONS: List the manufacturer, model and serial number for each keypad receiver & repeater attached to the system.

KEYPAD ADDRESS	AREA NO.	AUDIBLE (Y or N)	LOCATION	MODEL NUMBER	SERIAL #

RELAY INFORMATION

RELAY #	MODEL	TRIGGER	RESET METHOD	DESCRIPTION

PROPERTY OF THE UNITED STATES GOVERNMENT - FOR OFFICIAL USE ONLY
Do not remove this notice - Properly destroy documents when no longer needed.

ZONE/DEVICE INFORMATION

Only one device can be used per zone.

INSTRUCTIONS: List information regarding all alarmed devices (zones). List the manufacturer, model and serial number for each type of device installed. Identify the zone and/or area it is attached to. Provide a zone description that can be used when reporting an alarm condition to a responding authority. Please do not abbreviate. If it is a duress button, state whether it is audible or silent.

Device Types
BUR – Door, motion, overhead, and roof hatch devices
DUR – Duress and panic devices
ENV –Temperature and humidity devices
GLS – Glass break devices
TRB – Trouble devices
FIR – Fire devices
TPR – Tamper devices
SUP – Supervisory devices

Point Source
HWD - Hardwired
POP – Octopopit
ZON - Zonex
WIR – Wireless
DIP – Dip switch polling
SER – Serial number polling
OCT – Octo-Input
INO – Inovonics

For specific Point Source requirements – See Page 12

Response Types
24 – 24 Hour
L – Local Only
D – Entry Delay
F – Interior Follower
P – Perimeter Instant
I – Interior Instant
Y – Day Alarm
N – Night Alarm
EX – Exit Delay
O – Other

ZONE	AREA	DEVICE TYPE	SILENT/ AUDIBLE	ZONE DESCRIPTION (Include Location)	RESPONSE TYPE	MODEL NUMBER	SERIAL NUMBER	POINT SOURCE

PROPERTY OF THE UNITED STATES GOVERNMENT - FOR OFFICIAL USE ONLY
Do not remove this notice - Properly destroy documents when no longer needed.

ZONE	AREA	DEVICE TYPE	SILENT/ AUDIBLE	ZONE DESCRIPTION (Include Location)	RESPONSE TYPE	MODEL NUMBER	SERIAL NUMBER	POINT SOURCE

ADDITIONAL DEVICE INFORMATION

DEVICE #	MODEL	TYPE	FUNCTION	DESCRIPTION

Point Source Requirements

Ademco:

When setting the 4208U to a group of zone numbers, each zone must be programmed as follows:

- On ADEMCO 4140XMP and earlier controls, these zones must be programmed as Left Loop Polling Loop Zones.
- On ADEMCO VISTA-40 and later controls, these zones must be programmed as INPUT TYPE "7" – DIP - DIP Switch type polling device.
- When setting the 4208U to a group of serial numbers, each zone must be programmed as INPUT TYPE "6" --SER (Serial Number Polling Loop Device). Loops can be learned in any order and assigned to any legitimate zone number. Serial Numbers must be provided

Bosch:

If Zones are tied to a B208 OCTO Expander – The zones are OCT – Octo-Input.

- Zone Numbering for OCT
  - To calculate the zone numbers for each address, multiply the address number by 10 for the base number, and then use numbers 1 through 8 in the ones place for the zone numbers
  - Example:
    For B208 address 01 the zone numbers for the input devices are 11 through 18:
    Terminal # 1 2 3 4 5 6 7 8
    Zone # 11 12 13 14 15 16 17 18
    For B208 address 11 the zone numbers for the input devices are 111 through 118:
    Terminal # 1 2 3 4 5 6 7 8
    Zone # 111 112 113 114 115 116 117 118

- If zones are tied to a D8125 POP module – The Zones are POP – Octopopit

- If zones are tied to a Zonex or B600 module – The zones are ZON – Zonex

DMP:

- DMP zones can be HWD – Hardwired (to an expansion board) or WIR – Wireless
- DMP Zone Numbers, regardless of Point Source, can only be on the following numbers:
  1-14, 21-24, 31-34, 41-44, 51-54, 61-64, 71-74, 81-84, 91-94, 101-104, 111-114, 121-124, 131-134, 141-144, 151-154, 161-164, 500-999