COLUMN SCHEDULE BUILDING Nº 1

Floor levels (top to bottom):

Level	Elevation	Story height
PENTHOUSE ROOF	FIN. FL. EL. 170.78'	12'-5"
ELEV. MACH. FLOOR	FIN. FL. EL. 158.36'	11'-7"
ROOF	FIN. FL. EL. 146.78'	12'-8"
7TH. FLOOR	FIN. FL. EL. 134.11'	12'-8"
6TH. FLOOR	FIN. FL. EL. 121.45'	12'-8"
5TH. FLOOR	FIN. FL. EL. 108.78'	12'-8"
4TH. FLOOR	FIN. FL. EL. 96.11'	12'-8"
3RD. FLOOR	FIN. FL. EL. 83.45'	12'-8"
2ND. FLOOR	FIN. FL. EL. 70.78'	13'-9⅜"
1ST. FLOOR	FIN. FL. EL. 57.0'	13'-9⅜"
GROUND FLOOR	FIN. FL. EL. 43.22'	9'-0"
PIPE BASEMENT	TOP OF MAT EL. 34.22' (TOP OF MAT EL. 27.46')	
BASE PLATE		
BASE ℄ BOTT. ELEV.		

Column Schedule Building Nº 1 (sheet upper schedule)

BASE ℄ BOTTOM ELEV. 34.47'

Column	Base plate	Load	Section	Load	Section	Load	Section
A 2	14"x14"x1"	68.8K	7x7x¼				
A 3	14"x14"x1"	129.3K	7x7x½				
A 4	14"x14"x1"	129.3K	7x7x½				
A 5	14"x14"x1"	129.3K	7x7x½				
A 6	14"x18"x1¼"	132.0K	10WF33				
A 7	19"x21"x1⅝"	234.5K	10WF49				
A 8	12"x15"x1⅛"	65.0K	8WF31				
A 14	12"x12"x1"	61.4K	8WF31				
A 15	12"x21"x1¼"	137.0K	10WF33				
A 16	12"x21"x1¼"	137.0K	10WF33				
A 17	14"x18"x1¼"	137.0K	10WF33				
A 18	14"x18"x1¼"	137.0K	10WF33				
A 19	12"x21"x1¼"	137.0K	10WF33				
A 20	12"x12"x1"	81.9K	10WF33				
B 2	14"x14"x1"	108.0K	7x7x5/16				
B 3	19"x21"x1⅝"	151.0K	10WF49				
B 4	16"x19"x1⅜"	193.0K	10WF39				
B 5	17"x21"x1⅝"	238.0K	10WF45				
B 6	19"x21"x1⅝"	268.0K	10WF49				
B 8	17"x21"x1⅝"	216.1K	10WF45				
B 9	12"x21"x1¼"	170.8K	10WF33				
B 10	12"x25"x1⅜"	239.6K	10WF45				
B 11	12"x21"x1¼"	83.3K	10WF33				
B 12	17"x21"x1⅝"	239.6K	10WF45				
B 13	12"x21"x1¼"	170.8K	10WF33				
B 14	12"x21"x1¼"	196.4K	10WF39				
B 15	20"x22"x1¾"	313.6K	10WF60				
B 16	20"x22"x1¾"	313.6K	10WF60				
B 17	20"x22"x1¾"	313.6K	10WF60				
B 18	20"x22"x1¾"	313.6K	10WF60				
B 19	17"x21"x1⅝"	253.0K	10WF45				
B 20	12"x21"x1¼"	187.0K	10WF33				
C 2	14"x18"x1¼"	108.0K	10WF33				
C 3	19"x21"x1⅝"	220.0K	10WF60				
C 4	19"x21"x1⅝"	282.0K	10WF54				
C 5	28"x30"x2⅜"	551.8K / 87.0 W.L.	14WF167	315.3K	12WF161	81.3K	12WF72
C 6	28"x30"x2⅜"	551.8K	14WF136	315.3K	12WF99	81.3K	12WF40
C 7	29"x31"x2½"	642.0K	14WF142	338.1K	12WF99	82.3K	12WF40
C 8	32"x35"x3"	629.0K	14WF136	356.2K	12WF106	92.2K	12WF40
C 9	29"x31"x2½"	629.0 K / 87.0 K	14WF184	12WF120 + C.P. SEE DETAIL 1 THIS DWG.	12WF120	92.2 K	12WF85
C 13	29"x31"x2½"	629.0 K / 87.0 K	14WF184	12WF120 + C.P. SEE DETAIL 1 THIS DWG.	12WF120	92.2 K	12WF85
C 14	32"x35"x3"	629.0K	14WF136	356.0K	12WF106	92.2K	12WF40
C 15	28"x30"x2⅜"	551.8K	14WF136	315.3K	12WF99	81.3K	12WF40
C 16	28"x30"x2⅜"	551.8K	14WF136	315.3K	12WF99	81.3K	12WF40
C 17	28"x30"x2⅜"	551.8K / 87.0 W.L.	14WF167	315.3	12WF161	81.3K	12WF72
C 18	20"x22"x1¾"	313.6K	10WF60				
C 19	21"x23"x2"	329.4K	10WF60				
C 20	12"x21"x1¼"	187.0K	10WF33				
C.2 10	30"x33"x2¼"	708.0K	14WF119	424.7K	14WF78	105.3K	10WF33
C.2 11	16"x19"x1⅜"	203.0K	10WF39				
C.2 12	30"x33"x2¼"	708.0K	14WF119	424.7K	14WF78	105.3K	10WF33
D 2	14"x18"x1¼"	108.0K	10WF33				
D 3	19"x21"x1⅝"	220.0K	10WF60				
D 4	20"x22"x1¾"	299.9K	10WF54				
D 5	28"x30"x2⅜"	551.8K	14WF136	315.3K	12WF99	81.3K	12WF40
D 6	28"x30"x2⅜"	588.0 K	14WF103	347.0K	14WF68	108.0K	10WF33
D 7	28"x30"x2⅜"	588.0K	14WF103	347.0K	14WF68	108.0K	10WF33
D 8	29"x31"x2¼"	646.8K	14WF111	378.4K	14WF74	117.6K	10WF33
D 9	31"x34"x2⅞"	724.0K	14WF150	333.0K	14WF111	157.8K	12WF45
D 10	31"x34"x2⅞"	712.3K	14WF127	480.0K	14WF84	176.0K	10WF39

Column Schedule Building Nº 1 (sheet lower schedule)

Column	Base plate	Load	Section	Load	Section	Load	Section
D 11	14"x18"x1¼"	163.0 K	10WF33				
D 12	31"x34"x2⅞"	712.3 K	14WF127	480.0 K	14WF84	176.0 K	10WF39
D 13	31"x34"x2⅞"	724.0 K	14WF150	333.0 K	14WF111	157.8 K	12WF45
D 14	29"x31"x2¼"	646.8K	14WF111	378.4 K	14WF74	117.6K	10WF33
D 15	28"x30"x2⅜"	588.0K	14WF103	347.0 K	14WF68	108.0 K	10WF33
D 16	28"x30"x2⅜"	588.0K	14WF103	347.0K	14WF68	108.0K	10WF33
D 17	28"x30"x2⅜"	551.8K	14WF136	315.3 K	12WF99	81.3 K	12WF40
D 18	20"x22"x1¾"	313.6 K	10WF60				
D 19	21"x23"x2"	329.4 K	10WF66				
D 20	12"x21"x1¼"	187.0 K	10WF33				
E 2	14"x18"x1¼"	108.0 K	10WF33				
E 3	19"x21"x1⅝"	162.0 K	10WF49				
E 4	17"x21"x1⅝"	236.0 K	10WF45				
E 5	28"x30"x2⅜"	551.8 K	14WF136	315.3 K	12WF99	81.3 K	12WF40
E 6	28"x30"x2⅜"	588.0K	14WF103	347.0K	14WF68	108.0K	10WF33
E 7	31"x34"x2⅞"	717.0 K	14WF127	466.4 K	14WF84	132.0K	10WF33
E 8	31"x34"x2⅞"	718.2 K	14WF127	456.0 K	14WF84	146.0 K	14WF43
E 9	31"x34"x2⅞"	724.0 K	14WF150	333.0K	14WF111	157.8K	12WF45
E 10	30"x33"x2¼"	698.0K	14WF119	498.0 K	14WF95	252.0 K	14WF53
E 12	30"x33"x2¼"	693.0 K	14WF119	492.8 K	14WF95	249.6 K	14WF53
E 13	31"x34"x2⅞"	724.0K	14WF150	333.0 K	14WF111	157.8 K	12WF45
E 14	31"x34"x2⅞"	718.2 K	14WF127	456.0 K	14WF84	146.0 K	14WF43
E 15	31"x34"x2⅞"	717.0 K	14WF127	466.4 K	14WF84	132.0K	10WF33
E 16	28"x30"x2⅜"	588.0 K	14WF103	347.0 K	14WF68	108.0 K	10WF33
E 17	28"x30"x2⅜"	551.8 K	14WF136	315.3 K	12WF99	81.3 K	12WF40
E 18	20"x22"x1¾"	313.6K	10WF60				
E 19	19"x21"x1⅝"	252.0 K	10WF54				
E 20	12"x21"x1¼"	187.0 K	10WF33				
F 2	12"x25"x1⅜"	206.5K	10WF39				
F 3	21"x23"x2"	329.1 K	10WF60				
F 4	19"x21"x1⅝"	277.4	10WF49				
F 5	28"x30"x2⅜"	551.8 K	14WF136	315.3 K	12WF99	81.3 K	12WF40
F 6	28"x30"x2⅜"	588.0 K	14WF103	347.0 K	14WF68	108.0 K	10WF33
F 7	28"x30"x2⅜"	607.4 K	14WF103	408.4 K	14WF78	120.4 K	10WF33
F 8	30"x33"x2¼"	705.2 K	14WF119	425.5 K	14WF78	138.7 K	14WF43
F 9	31"x34"x2⅞"	724.0 K	14WF150	333.0 K	14WF111	157.8 K	12WF45
F 10	31"x34"x2⅞"	748.7 K	14WF127	525.0 K	14WF95	260.2 K	14WF61
F 12	32"x35"x3	799.6 K	14WF136	564.0 K	14WF103	276.8 K	14WF61
F 13	31"x34"x2⅞"	724.0K	14WF150	333.0 K	14WF111	157.8 K	12WF45
F 14	30"x33"x2¼"	705.2 K	14WF119	425.5 K	14WF78	138.7 K	14WF43
F 15	30"x33"x2¼"	676.4K	14WF119	408.0K	14WF78	120.4 K	10WF33
F 16	28"x30"x2⅜"	588.0K	14WF103	347.0 K	14WF68	108.0K	10WF33
F 17	28"x30"x2⅜"	551.8 K	14WF136	315.3 K	12WF99	81.3K	12WF40
F 18	17"x21"x1⅝"	243.0K	10WF45				
F 19	20"x22"x1¾"	293.0K	10WF60				
F 20	14"x18"x1¼"	172.0 K	10WF33				
G 2	12"x21"x1¼"	158.4 K	10WF33				
G 3	19"x21"x1⅝"	253.6K	10WF49				
G 4	17"x21"x1⅝"	216.1K	10WF45				
G 5	28"x30"x2⅜"	551.8K / 87.0 W.L.	14WF167	315.3 K	12WF161	81.3 K	12WF72
G 6	28"x30"x2⅜"	551.8 K	14WF136	315.3 K	12WF99	81.3 K	12WF40

BASE ℄ BOTT. ELEV.: 34.47' — 27.71 — 34.47' — 27.71 — 34.47' — 27.71 — 34.47'

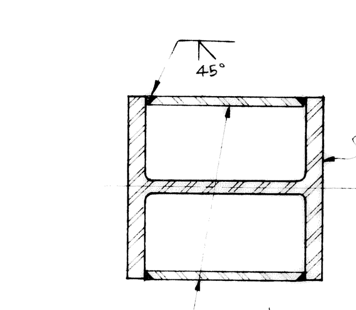

COLUMNS C9; C13; G9; G13; J9; J13
FROM 2ND FL. TO 4TH FL.
DETAIL 1
SCALE: 1½" = 1'-0"

H. JOSEPH DIAZ CERTIFICATE No. 898 STATE OF FLORIDA REGISTERED ENGINEER

FRANK S. VALENTI CERTIFICATE No. 2532 STATE OF FLORIDA REGISTERED ARCHITECT

COLUMN SCHEDULE BUILDING Nº 1	
720 BED M.S. & N. HOSPITAL	
VETERANS ADMINISTRATION TAMPA, FLORIDA	
Drawn A.G. / Proj. Mgr. F.S.V.	REVISIONS: 1 AS BUILT 7-20-72
Checked L.C. / Date AUG. 15, 68	
ELIOT C. FLETCHER AIA; FRANK S. VALENTI AIA, ARCHITECTS, TAMPA; SCHMIDT, GARDEN & ERIKSON, ASSOCIATE ARCHITECTS-ENGINEERS, CHICAGO; H. JOSEPH DIAZ & ASSOCS.; SAM CARASTRO & ASSOCS., ENGINEERS, TAMPA	DRAWING NUMBER 1-S5
Director, Eastern Area Projects	Sheet 7 of 49 / Proj. No. 09-5239

38

3-0-1-2257

RETURN TRACINGS TO PLAN LIBRARY

FILE FOLDER NO. 2A