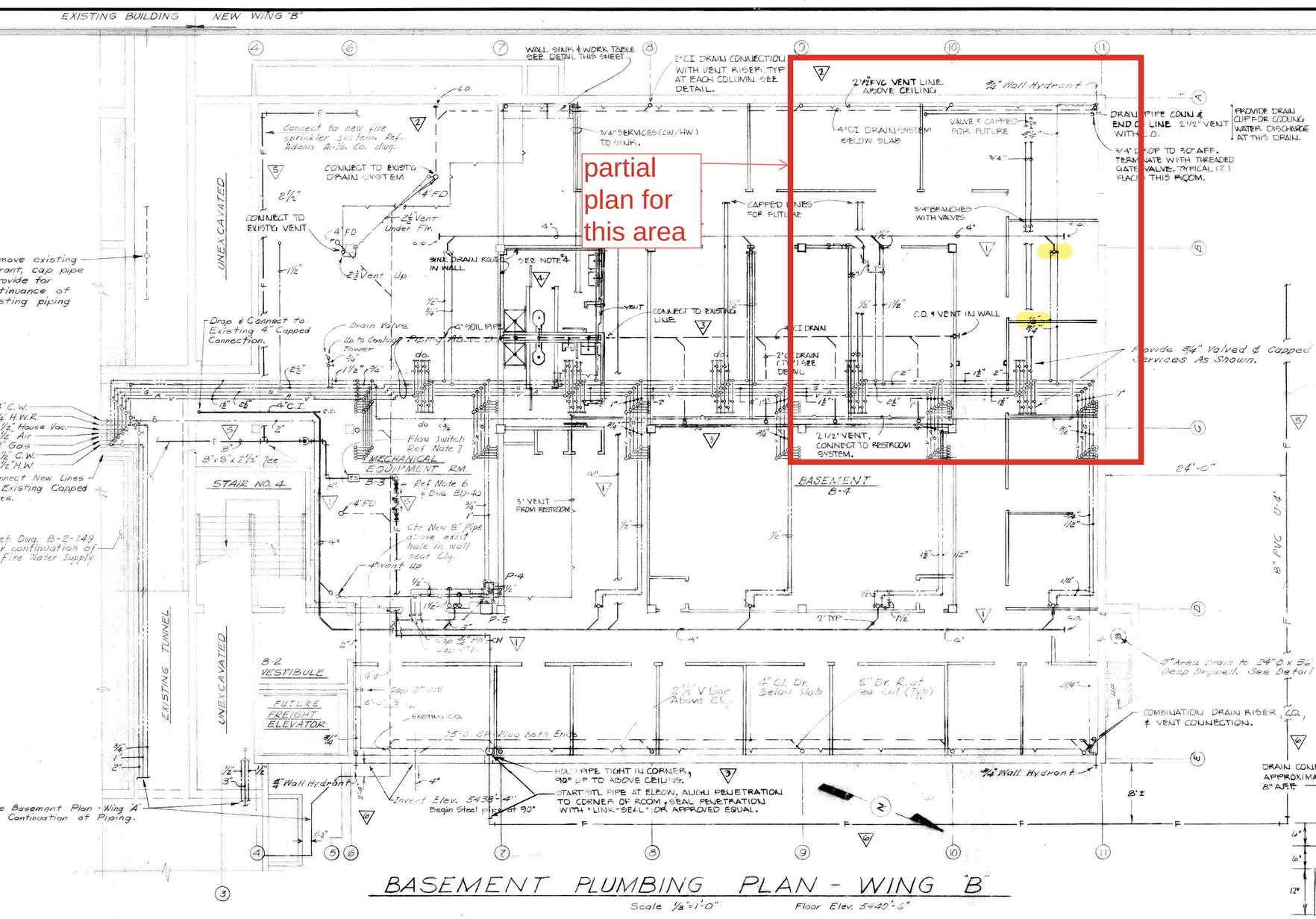

BASEMENT PLUMBING PLAN - WING "B"

Scale 1/8" = 1'-0" Floor Elev. 5440'-6"

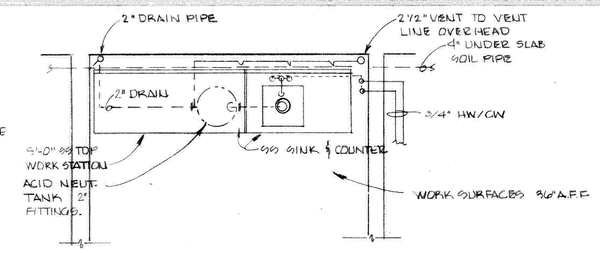

RM 0311 SINK/WORK STATION DETAIL

SCALE 3/8" = 1'-0"

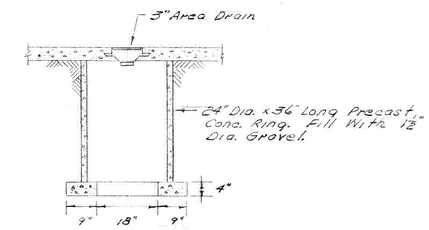

DRYWELL DETAIL

Scale 1/2" = 1'-0"

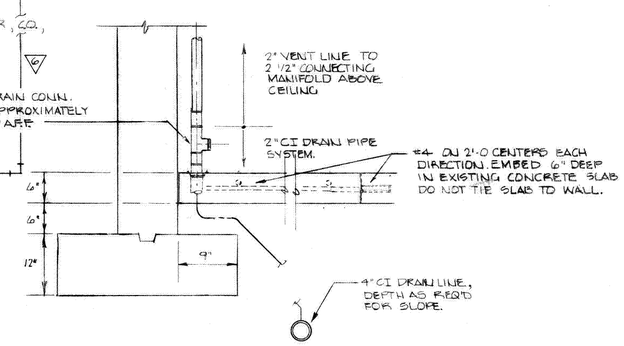

DRAIN RISER AT WALLS

SCALE 3/4" = 1'-0"

SEE 27-7-81A FOR CONC DETAIL

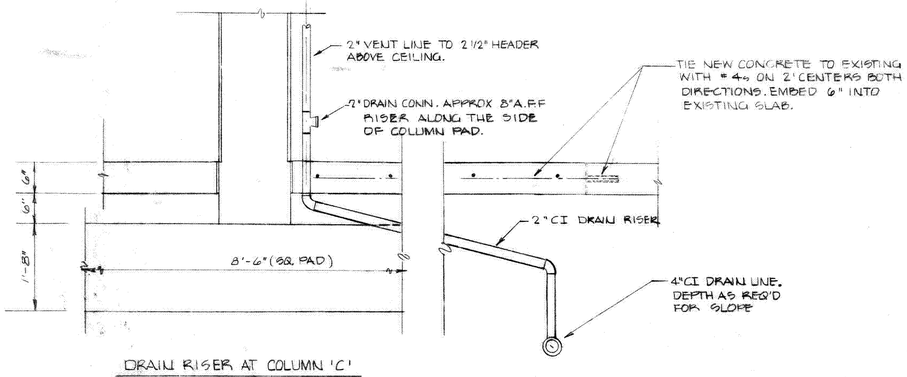

DRAIN RISER AT COLUMN 'C'

SCALE 3/4" = 1'-0"

SEE 27-7-81A FOR CONC DETAIL

NOTES:

1. DRAIN LINES SHALL ... VENT LINES MAY BE A...
2. COLD WATER / HOT WAT... SHALL BE TYPE L COPP... AND FITTINGS SHALL HA... JOINTS. PIPING SHALL B... AND LABELLED.
3. DRAIN CUPS (6" x 2") WITH ... SHALL BE PROVIDED FOR ... WATER DISCHARGE, ARR... SHALL HAVE A PROPER ... A BACKFLOW PREVENTER ... SUPPLY LINE TO THE EQ...
4. RESTROOM PLUMBING SHALL ... AS NECESSARY TO PROVID... TO FIXTURE LOCATIONS ... ON ARCHITECTURAL PL...
5. UNUSED DRAIN CONNECTI... BE PROPERLY PLUGGED...
6. DBL CHK V BELOW PRE... APPD BY AWWA C-510 ... CLASSIFIED BY UL. ... E, OR EQUAL. REF ... TION THIS DWG
7. A water flow detector van... water filled fire sprinkler s... the specific pipe dimension... matically controlled mech... mechanism, noncumulative... activate on a sustained fl... ceeding 10 GPM & not acti... rate less than 4 GPM. Th... shall be a Systems Sensor ... or WFD80, or equal. Unit shall be connected to ... itoring systems per NFPA

Ref. Dwg. No. B-2-149 3, 11 & 18 of 18.

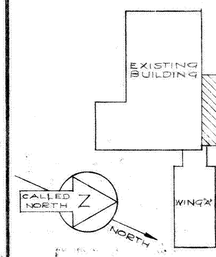

PILOT PLAN

REV	DESCRIPTION	BY	ENGR	SAFETY	USER	MAINT	CHK	APPD	DATE
6	REVISE FIRE LINE TO OUTSIDE OF COLUMN LINE E	RGF	RGF	5/17/93					4/28/93
5	ADD NEW 8" Ø FIRE LINE	EM							3/3/93
4	REVISED RESTROOM PLAN	RGF			N/A				6/2/92
3	ADD BELOW SLAB DRAINS ALONG COLUMN LINES "C" & "E"	RGF							9/18/92
2	NEW UNDER SLAB DRAIN @ "A" REWORK RESTROOMS' DRAINS.	RGF							9/11/92
1	REPLACE DRAIN LINE FOR 1ST FLOOR LABORATORIES.	RGF							9/14/92

ADDITION TO CRYOGENIC

DESIGN AND CONSTRUCTION
REGION 8 - DENVER, CO

GENERAL SERVICES ADMIN
PUBLIC BUILDINGS SERVICE • WA

PROJECT	BOULDER LABORATO NATIONAL BUREAU
LOCATION	BOULDER COU
STREET	STATE HIGHW
PROJ. NO.	62-111
DRAWN BY	K.C.
DRAWING TITLE	BASEMENT PLU WING "B"
DRAWING NO.	27-9-P-87 A

MECHANICAL

B-28717